EagleBurgmann®
Rely on excellence

Product catalog

Mechanical seals

Magnetic couplings

Carbon floating ring seals

Seal supply systems

Contents

1 Mechanical seals

Index **5**
Mechanical seals for pumps 6
Agitator seals 110
Compressor seals 130

2 Magnetic couplings

Index **147**
Couplings 148
Bearings 155

3 Carbon floating ring seals

Index **157**
Shaft seals 158
Shaft sleeves 182

4 Seal supply systems

Index **185**

5 Technical information

Index **257**
Material code . . . . . Inside back cover

6 Mechanical seal selection by media

Index **273**

+ Additional information

TotalSealCare™ . . . . . Inside back cover
Company profile 2
Additional product lines 300

All products shown in this catalog are available interactively at www.eagleburgmann.com, where, among other things, up-to-date data sheets in PDF format can also be created easily.

Important note

All the technical specifications are based on extensive tests and our many years of experience. However, the diversity of possible applications means that they can serve as guide values only.

It should be noted that the extremal values of each operating parameter cannot be applied at the same time because of their interaction. Furthermore, the operating range of each specific product depends on the respective shaft diameter, materials used, mode of operation and on the medium to be sealed.

A guarantee can only be given in the individual case if the exact conditions of application are known and these are confirmed in a special agreement. When critical conditions of operation are involved, we recommend consulting with our specialist engineers.

Subject to change.

Our products – as varied as our customers

EagleBurgmann products deliver safe, reliable sealing performance in any application including oil pumping and cracking, gas compression, process gas containment, phase separation or synthesis of chemical substances, pipeline sealing, dairy product filling or compensation of temperature expansion in flue gas systems.

Our challenge is to design seals that are able to withstand a wide range of media, different aggregate states and varying pressure and temperature and to provide special solutions for small installation up to seal contact areas of several meters. Every application has its own special requirements profile, and our job is to provide the best sealing solution.

The EagleBurgmann portfolio:
A product range with an unlimited horizon.
EagleBurgmann is one of the world's leading manufacturer of industrial sealing solutions. Our extensive portfolio includes everything from standard seals to one-off application-specific designs:

- Mechanical seals
- Magnetic couplings
- Seal supply systems
- Carbon floating ring seals
- Compression packings
- Gaskets
- Expansion joints
- Special products
- TotalSealCare™ Services

Total commitment to quality excellence.
Outstanding quality is the top priority at EagleBurgmann. Our products are designed for user-friendly installation, optimal functionality and long service life. Our R&D activities, advanced quality management system, in-house test facilities and in-depth engineering expertise ensure that our seals meet the most demanding customer expectations. Starting right back in the development phase, our employees continually verify the quality of our products, and we carry out systematic inspection and testing to guarantee that customers are getting top quality.

Proud of the trust which our customers place in us.
EagleBurgmann is a dependable, competent partner. Our customers are always in total control of the media in their pumps, agitators, compressors, blowers, turbines, valves and pipeline systems even when operating conditions are extremely harsh. There is good reason why customers in the oil & gas, refinery, chemical, energy, food processing, paper, water, marine, aerospace, mining and other industries choose EagleBurgmann as their sealing solutions supplier.

Mechanical seals

1

Mechanical seals for pumps
EagleBurgmann offers a complete range of liquid and gaslubricated pump shaft seals including standard and engineered seals in single and multi-seal versions. We also offer a complete range of solutions for all API 682 categories and arrangements. The portfolio includes a broad selection of material and surface technologies such as DiamondFaces® coatings.

Mechanical seals for agitators
Sealing solutions for normal and sterile applications. The design and selection of materials ensure that the seals are rugged enough to deliver outstanding cost and engineering performance in everyday applications.

Mechanical seals for compressors
A complete range of products for process gas compressors from a single source. Single, double and tandem versions and tandem seals with intermedia labyrinths. Rugged, non-wearing, non-contact seals designed to deliver outstanding performance and long service life.

Mechanical seals for pumps

Pusher seals
M2N 6
M3N 8
M7N 10
M74-D 12
HA211 14
H7N 16
LB500 18
H74-D 20
EK700 22
Pulace 24
HRN 26
H75VN 28
H75VK 30
HJ92N 32
H3B 34
H12N 36
H10/H8 38

Standard cartridge seals
Cartex® Single seals 40
Cartex® Dual seals 42
Cartex® ANSI Single seals 44
Cartex® ANSI Dual seals 46
MA290/MA390 48
Unitex® 50
Mtex Single seals 52
Mtex Dual seals 54
APItex® 56

Elastomer bellows seals
MG1 58
MG9 60
EA560 62
ED560 63
EA100 64
EH700 65
BT-AR 66
BT-A2 68
BT-PN 69

Metal bellows seals
MBS100 70
MFL85N 72
MFLWT 74
MFLCT 76
MF95N 78
YE400 80
MFL65 82

Engineered seals
EK777 84
HR 86
HRC...N 88
SH(V) 90
SHF/SHP 91
SHPV/SHFV 92
SAF(V)/SAP(V) 93
SHF(V)-D/SHP(V)-D 94

Split seals
Splitex® 96
HGH201 98

Gas-lubricated seals
Cartex®-GSDN 100
EM300 102
CGSH-K 104
GSO-DN 106
HRGS-D 107
NF992 108

Agitator seals

Dry-running seals
SeccoMix® 110
AD510/AD520 112

Gas-lubricated seals
AGSZ 114
AGSR 116

Liquid-lubricated seals
ERB/ERC 118
M481 120
M461 122
MR-D 124
HS-D 126
HSH-D 127
HSHLU-D 128

Shut-down seal
STD1 129

Compressor seals

Gas-lubricated seals
DGS 130
PDGS 132
MDGS 134
TDGS 136
NF941 137
NF953 138

Barrier seals
CSR 140
CSE 142
CobaSeal™ 144

M2N

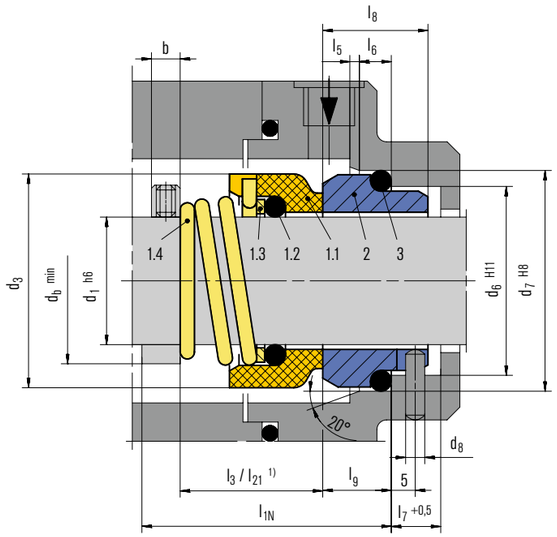

Features

- For plain shafts
- Single seal
- Unbalanced
- Conical spring rotating
- Dependent on direction of rotation

Advantages

- Economical seal solution
- No damage of the shaft by set screws
- Short installation length possible (G16)

Operating range (see note on page 1)

Shaft diameter: d_1 = 6 ... 38 mm (0.25" ... 1.5")
Pressure: p_1 = 10 bar (145 PSI)
Temperature: t = –20 °C ... +140 °C (–4 °F ... +355 °F)
Sliding velocity: v_g = 15 m/s (50 ft/s)
Axial movement: ±1.0 mm

Materials

Seal face: Carbon graphite resin impregnated (B)
Seat G9: Silicon carbide (Q1, Q2),
Special cast CrMo steel (S), Aluminium oxide (V)

Standards and approvals

- EN 12756

Recommended applications

- Water and waste water technology
- Building services engineering
- Water pumps
- Heating circulation pumps

Item	Part no. to DIN 24250	Description
1.1	472	Seal face
1.2	412.1	O-Ring
1.3	474	Thrust ring
1.4	478	Righthand spring
1.4	479	Lefthand spring
2	475	Seat (G9)
3	412.2	O-Ring

Product variants

M2
Rotating unit M2 with seat G4
or G16 (shorter installation length)
Seal face: Carbon graphite resin impregnated (B)
Seat G4: Silicon carbide (Q1),
Special cast CrMo steel (S)
Seat G16: Silicon carbide (Q1, Q2),
Special cast CrMo steel (S), Aluminium oxide (V)

M2N4
Rotating unit M2 with seat G6
Seal face: Carbon graphite resin impregnated (B)
Seat G6: Silicon carbide (Q1),
Special cast CrMo steel (S)

Seat alternatives

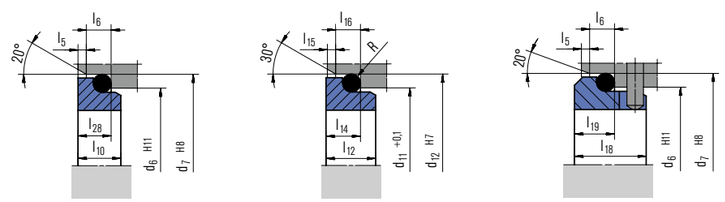

G6 (EN 12756) **G4** **G16** (EN 12756)

Dimensions in mm

d_1	d_3	d_6	d_7	d_8	d_{11}	d_{12}	d_b	l_{1N}	l_3 1)	l_5	l_6	l_7	l_8	l_{10}	l_{12}	l_{14}	l_{15}	l_{16}	l_{18}	l_{19}	l_{21} 1)	l_{28}	b	R
6	15	–	–	–	11.8	16.0	8	–	–	–	–	–	–	–	6.5	5.6	1.2	3.8	–	–	10.9	–	–	1.2
8	18	–	–	–	15.5	19.2	11	–	–	–	–	–	–	–	8.0	7.0	1.2	3.8	–	–	15.5	–	–	1.2
10	20	17	21	3	15.5	19.2	13	40	17.5	1.5	4	8.5	17.5	7.5	7.5	6.6	1.2	3.8	–	–	15.9	6.6	8	1.2
12	22	19	23	3	17.5	21.6	16	40	17.5	1.5	4	8.5	17.5	7.5	8.0	7.0	1.2	3.8	–	–	16.0	6.6	8	1.2
14	25	21	25	3	20.5	24.6	18	40	17.5	1.5	4	8.5	17.5	7.5	8.0	7.0	1.2	3.8	–	–	16.0	6.6	8	1.2
15	27	–	–	–	20.5	24.6	19	–	–	–	–	–	–	–	7.5	6.6	1.2	3.8	–	–	17.4	–	–	1.2
16	27	23	27	3	22.0	28.0	21	40	19.5	1.5	4	8.5	17.5	7.5	8.5	7.5	1.5	5.0	–	–	19.0	6.6	8	1.5
18	30	27	33	3	24.0	30.0	23	45	20.5	2.0	5	9.0	19.5	8.5	9.0	8.0	1.5	5.0	15	7	20.5	7.5	8	1.5
20	32	29	35	3	29.5	35.0	26	45	22.0	2.0	5	9.0	19.5	8.5	8.5	7.5	1.5	5.0	15	7	22.0	7.5	8	1.5
22	35	31	37	3	29.5	35.0	28	45	23.5	2.0	5	9.0	19.5	8.5	8.5	7.5	1.5	5.0	15	7	23.5	7.5	8	1.5
24	38	33	39	3	32.0	38.0	30	50	25.0	2.0	5	9.0	19.5	8.5	8.5	7.5	1.5	5.0	15	7	25.0	7.5	8	1.5
25	40	34	40	3	32.0	38.0	31	50	26.5	2.0	5	9.0	19.5	8.5	8.5	7.5	1.5	5.0	15	7	26.5	7.5	8	1.5
26	41	–	–	–	34.0	40.0	32	–	–	–	–	–	–	–	9.0	8.0	1.5	5.0	–	–	26.5	–	–	1.5
28	43	37	43	3	36.0	42.0	35	50	26.5	2.0	5	9.0	19.5	8.5	10.0	9.0	1.5	5.0	15	7	26.5	7.5	8	1.5
30	47	–	–	–	39.2	45.0	37	–	–	–	–	–	–	–	11.5	10.5	1.5	5.0	15	7	25.0	–	–	1.5
32	48	–	–	–	42.2	48.0	39	–	–	–	–	–	–	–	13.0	10.5	1.5	5.0	15	7	28.5	–	–	1.5
35	53	–	–	–	46.2	52.0	43	–	–	–	–	–	–	–	13.5	11.0	1.5	5.0	15	7	28.5	–	–	1.5
38	56	–	–	–	49.2	55.0	47	–	–	–	–	–	–	–	13.0	10.3	1.5	5.0	16	8	32.0	–	–	1.5

1) l_3 valid for M2N, l_{21} valid for M2

M3N

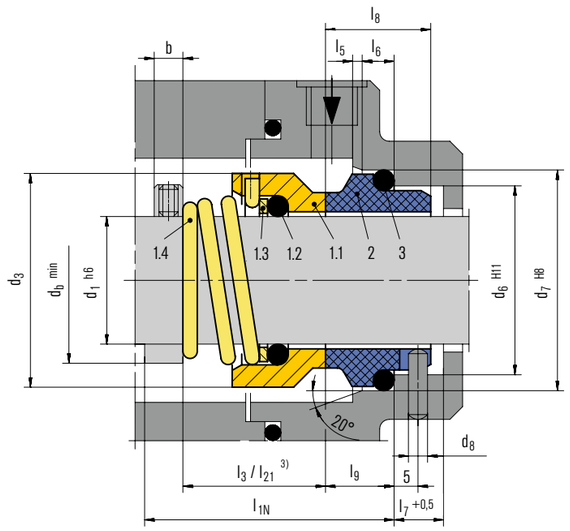

Features

- For plain shafts
- Single seal
- Unbalanced
- Rotating conical spring
- Dependent on direction of rotation

Advantages

- Universal application opportunities
- Insensitive to low solids content
- No damage of the shaft by set screws
- Large choice of materials
- Short installation lengths possible (G16)
- Variants with shrink-fitted seal face available

Item	Part no. to DIN 24250	Description
1.1	472	Seal face
1.2	412.1	O-Ring
1.3	474	Thrust ring
1.4	478	Righthand spring
1.4	479	Lefthand spring
2	475	Seat (G9)
3	412.2	O-Ring

Operating range (see note on page 1)

Shaft diameter: d_1 = 6 ... 80 mm (0.24" ... 3.15")
Pressure: p_1 = 10 bar (145 PSI)
Temperature: t = –20 °C ... +140 °C (–4 °F ... +355 °F)
Sliding velocity: v_g = 15 m/s (50 ft/s)
Axial movement: ±1.0 mm

Materials

Seal face: CrMo special cast steel (S)
Seat G9: Carbon graphite antimony impregnated (A), Carbon graphite resin impregnated (B)

Standards and approvals

- EN 12756

Recommended applications

- Process industry
- Water and waste water technology
- Chemical industry
- Food and beverage industry
- Low solids content media
- Water and sewage water pumps
- Submersible pumps
- Chemical standard pumps
- Eccentric screw pumps
- Cooling water pumps
- Basic sterile applications

Product variants

M3
Items and description as M3N.
Seal face: Special cast CrMo steel (S)
Seat G13: Carbon graphite antimony impregnated (A), Carbon graphite resin impregnated (B)

M32
Items and descriptions as for type M3N, but with carbon graphite seal face shrink-fitted into the seal face carrier (Item no. 1.1)

Seal face: Carbon graphite antimony impregnated (A), Carbon graphite resin impregnated (B)
Seat G4: Special cast CrMo steel (S), Silicon carbide (Q1, Q2)
Seat G6 (M32N4): Special cast CrMo steel (S), Silicon carbide (Q1, Q2)
Seat G9 (M32N): Silicon carbide (Q1, Q2)

Seat G6 also available in A, B = G30 (longer installation length than G6)

M37G
Items and descriptions as for type M3N, but with shrink fitted silicon carbide seal face to the seal face carrier (Item no. 1.1).
Shaft diameter: d_1 = 16 ... 80 mm (0.63" ... 3.15")
Temperature: t = –20 °C ... +180 °C (–4 °F ... +355 °F)
Sliding velocity: v_g = 10 m/s (33 ft/s)

Seal face: Silicon carbide (Q12, Q22), Tungsten carbide (U22)
Seat G4: Silicon carbide (Q1, Q2)
Seat G13: Carbon graphite antimony impregnated (A), Carbon graphite resin impregnated (B)
Seat G6 (M37GN4): Silicon carbide (Q1, Q2)
Seat G9 (M37GN): Carbon graphite antimony impregnated (A), Carbon graphite resin impregnated (B), Silicon carbide (Q1, Q2)

Seat G6 also available in A, B = G30 (longer installation length than G6)

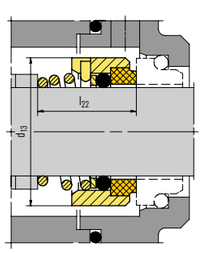

M32

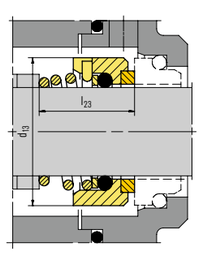

M37G

Seat alternatives

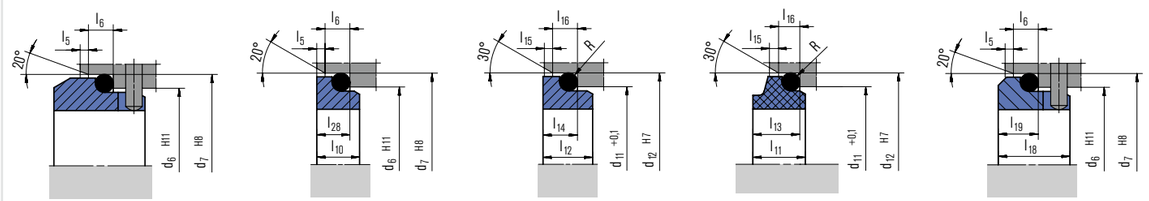

Dimensions in mm

d_1	d_3	d_6	d_7	d_8	d_{11} 1)	d_{12} 1)	d_{13}	d_b	l_{1N}	l_3 3)	l_5	l_6	l_7	l_8	l_9	l_{10}	l_{11}	l_{12}	l_{13}	l_{14}	l_{15}	l_{16}	l_{18}	l_{19}	l_{21} 3)	l_{22}	l_{23}	l_{28}	b 2)	R
6	14	–	–	–	11.5	16.0	16	8	–	–	–	–	–	–	–	–	9.0	6.5	7.1	5.6	1.2	3.8	–	–	10.5	11.9	–	–	–	1.2
8	18	–	–	–	15.5	19.2	18	11	–	–	–	–	–	–	–	–	9.0	8.0	7.1	7.0	1.2	3.8	–	–	15.5	16.9	–	–	–	1.2
10*	19	17	21	3	15.5	19.2	20	13	40	15.5	1.5	4	8.5	17.5	10.0	7.5	9.0	7.5	7.1	6.6	1.2	3.8	–	–	15.5	16.9	–	6.6	(8)	1.2
12*	21	19	23	3	17.5	21.6	22	16	40	16.0	1.5	4	8.5	17.5	10.0	7.5	10.0	6.5	7.6	5.6	1.2	3.8	–	–	15.5	17.4	–	6.6	(8)	1.2
14*	23	21	25	3	20.5	24.6	24	18	40	16.5	1.5	4	8.5	17.5	10.0	7.5	10.0	6.5	7.6	5.6	1.2	3.8	–	–	15.5	17.4	16.5	6.6	(8)	1.2
15	24	–	–	–	20.5	24.6	25	19	–	–	–	–	–	–	–	–	11.0	7.5	8.6	6.6	1.2	3.8	–	–	15.5	17.4	–	–	–	1.2
16*	26	23	27	3	22.0	28.0	26	21	40	18.0	1.5	4	8.5	17.5	10.0	7.5	11.5	8.5	9.0	7.5	1.5	5.0	–	–	17.5	19.5	16.5	6.6	(8)	1.5
18*	29	27	33	3	24.0	30.0	31	23	45	19.5	2.0	5	9.0	19.5	11.5	8.5	12.5	9.0	10.0	8.0	1.5	5.0	15	7	18.5	20.5	18.0	7.5	(8)	1.5
20*	31	29	35	3	29.5	35.0	34	26	45	22.0	2.0	5	9.0	19.5	11.5	8.5	12.5	8.5	9.5	7.5	1.5	5.0	15	7	20.0	22.0	19.0	7.5	(8)	1.5
22*	33	31	37	3	29.5	35.0	36	28	45	21.5	2.0	5	9.0	19.5	11.5	8.5	12.5	8.5	9.5	7.5	1.5	5.0	15	7	21.5	23.5	20.5	7.5	(8)	1.5
24*	35	33	39	3	32.0	38.0	38	30	50	23.5	2.0	5	9.0	19.5	11.5	8.5	12.5	8.5	9.5	7.5	1.5	5.0	15	7	23.0	25.0	22.0	7.5	(8)	1.5
25*	36	34	40	3	32.0	38.0	39	31	50	26.5	2.0	5	9.0	19.5	11.5	8.5	12.5	8.5	9.5	7.5	1.5	5.0	15	7	24.5	26.5	23.5	7.5	(8)	1.5
26	37	–	–	–	34.0	40.0	40	32	–	–	–	–	9.0	–	–	–	13.0	9.0	10.0	8.0	1.5	5.0	–	–	24.5	26.5	23.5	–	–	1.5
28*	40	37	43	3	36.0	42.0	42	35	50	26.5	2.0	5	9.0	19.5	11.5	8.5	14.0	10.0	11.0	9.0	1.5	5.0	15	7	24.5	26.5	24.5	7.5	(8)	1.5
30*	43	39	45	3	39.2	45.0	44	37	50	26.5	2.0	5	9.0	19.5	11.5	8.5	14.0	11.5	11.0	10.5	1.5	5.0	15	7	24.5	25.0	24.5	7.5	(8)	1.5
32*	46	42	48	3	42.2	48.0	46	39	55	28.5	2.0	5	9.0	19.5	11.5	8.5	14.0	11.5	11.0	10.5	1.5	5.0	15	7	28.0	28.5	28.0	7.5	(8)	1.5
33*	47	42	48	3	–	–	47	40	55	28.5	2.0	5	9.0	19.5	11.5	8.5	–	12.0	–	–	–	–	15	7	–	–	–	7.5	(8)	1.5
35*	49	44	50	3	46.2	52.0	49	43	55	28.5	2.0	5	9.0	19.5	11.5	8.5	14.5	12.0	11.5	11.0	1.5	5.0	15	7	28.0	28.5	28.0	7.5	(8)	1.5
38*	53	49	56	4	49.2	55.0	54	45	55	33.5	2.0	6	9.0	22.0	14.0	10.0	14.5	11.3	11.5	10.3	1.5	5.0	16	8	31.0	32.2	31.0	9.0	7.5	1.5
40*	56	51	58	4	52.2	58.0	56	49	55	36.0	2.0	6	9.0	22.0	14.0	10.0	14.5	11.8	11.5	10.8	1.5	5.0	16	8	34.0	34.7	34.0	9.0	(8)	1.5
42	59	–	–	–	53.3	62.0	58	52	–	–	–	–	9.0	–	–	–	17.0	13.2	14.3	12.0	2.0	6.0	–	–	35.0	37.3	35.0	–	–	2.5
43*	59	54	61	4	–	–	59	52	60	38.5	2.0	6	9.0	22.0	14.0	10.0	–	13.2	–	–	2.0	–	16	8	–	–	–	9.0	7.5	2.5
45*	61	56	63	4	55.3	64.0	61	55	60	39.5	2.0	6	9.0	22.0	14.0	10.0	17.0	12.8	14.3	11.6	2.0	6.0	16	8	36.5	39.2	36.5	9.0	(8)	2.5
48*	64	59	66	4	59.7	68.4	64	58	60	46.0	2.0	6	9.0	22.0	14.0	10.0	17.0	12.8	14.3	11.6	2.0	6.0	16	8	42.0	44.7	42.0	9.0	(8)	2.5
50*	66	62	70	4	60.8	69.3	66	61	60	45.0	2.5	6	9.0	23.0	15.0	10.5	17.0	12.8	14.3	11.6	2.0	6.0	17	9.5	43.0	45.7	43.0	9.5	(8)	2.5
53*	69	65	73	4	–	–	69	64	70	47.0	2.5	6	9.0	23.0	15.0	12.0	–	13.5	–	–	–	–	17	9.5	–	–	–	11.0	8.0	2.5
55*	71	67	75	4	66.5	75.4	71	66	70	49.0	2.5	6	9.0	23.0	15.0	12.0	18.0	14.5	15.3	13.3	2.0	6.0	17	9.5	47.0	49.0	47.0	11.0	(8)	2.5
58*	76	70	78	4	69.5	78.4	78	69	70	55.0	2.5	6	9.0	23.0	15.0	12.0	18.0	14.5	15.3	13.3	2.0	6.0	18	10.5	50.0	52.0	50.0	11.0	(8)	2.5
60*	78	72	80	4	71.5	80.4	79	71	70	55.0	2.5	6	9.0	23.0	15.0	12.0	18.0	14.5	15.3	13.3	2.0	6.0	18	10.5	51.0	55.0	51.0	11.0	(8)	2.5
63*	83	75	83	4	–	–	83	74	70	55.0	2.5	6	9.0	23.0	15.0	12.0	–	14.2	–	–	–	–	18	10.5	–	–	–	11.0	(8)	2.5
65*	84	77	85	4	76.5	85.4	85	77	80	55.0	2.5	6	9.0	23.0	15.0	12.0	18.0	14.2	15.3	13.0	2.0	6.0	18	10.5	52.0	54.3	52.0	11.0	(8)	2.5
68*	88	81	90	4	82.7	91.5	88	80	80	55.0	2.5	7	9.0	26.0	18.0	12.5	19.0	14.9	16.0	13.7	2.0	6.0	18.5	11	53.0	55.3	52.7	11.3	(8)	2.5
70*	90	83	92	4	83.0	92.0	90	83	80	57.0	2.5	7	9.0	26.0	18.0	12.5	18.0	14.2	15.3	13.0	2.0	6.0	19	11.5	54.0	56.3	54.0	11.3	(10)	2.5
75*	98	88	97	4	90.2	99.0	98	88	80	62.0	2.5	7	9.0	26.0	18.0	12.5	18.0	15.2	15.3	14.0	2.0	6.0	19	11.5	55.0	56.3	54.0	11.3	(10)	2.5
80*	100	95	105	4	95.2	104.0	103	93	90	61.8	3.0	7	9.0	26.2	18.2	13.0	19.0	16.2	16.3	15.0	2.0	6.0	19	11.5	58.0	59.3	58.0	12.0	10.0	2.5

1) Fitting dimensions d_{11} and d_{12} only apply to type M37G with d_1 >16 mm
2) Dimensions in brackets lie either above or below l_{1N}
3) l_3 valid for M3...N, l_{21} valid for M3
*) According to EN 12756

M7N

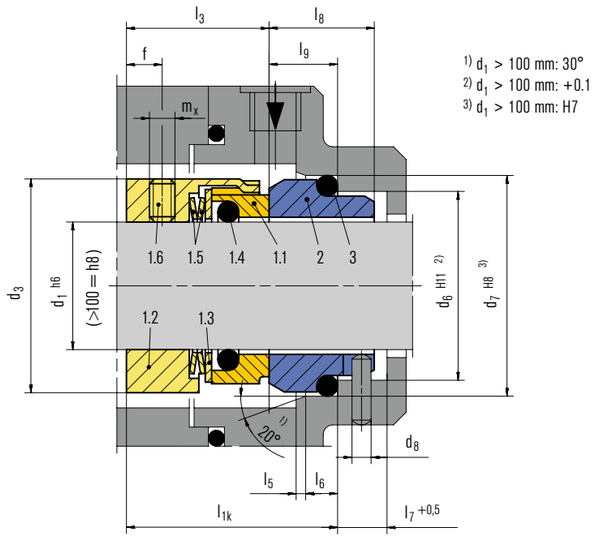

1) d_1 > 100 mm: 30°
2) d_1 > 100 mm: +0.1
3) d_1 > 100 mm: H7

Features

- For plain shafts
- Single seal
- Unbalanced
- Super-Sinus-spring or multiple springs rotating
- Independent of direction of rotation
- Pumping screw for media with higher viscosity (M7..F)
- Variant with PTFE secondary seals for high chemical resistance (M78N)

Advantages

- Universal application opportunities
- Efficient stock keeping due to easily interchangeable faces
- Extended selection of materials
- Insensitive to low solids contents
- Flexibility in torque transmissions
- Self cleaning effect
- Short installation length possible (G16)

Operating range (see note on page 1)

Shaft diameter: d_1 = 14 ... 100 mm (0.55" ... 3.94")
Pressure: p_1 = 25 bar (363 PSI)
Temperature: t = –50 °C ... +220 °C (–58 °F ... +428 °F)
Sliding velocity: v_g = 20 m/s (66 ft/s)
Axial movement:
d_1 = ... 25 mm: ±1.0 mm
d_1 = 28 ... 63 mm: ±1.5 mm
d_1 = from 65 mm: ±2.0 mm

Materials

Seal face: Special cast CrMo steel (S), Silicon carbide (Q1, Q2), Aluminium Oxide (V)
Seat G9: Carbon graphite antimony impregnated (A), Carbon graphite resin impregnated (B), Silicon carbide (Q1*, Q2*)
Seat G4: Silicon carbide (Q1*, Q2*)
Seat G6: Silicon carbide (Q1*, Q2*)
Seat G13: Carbon graphite antimony impregnated (A), Carbon graphite resin impregnated (B)

Secondary seals: EPDM (E), NBR (P), FKM (V), FFKM (K)
Springs: CrNiMo steel (G)
Metal parts: CrNiMo steel (G), Duplex (G1)
* Cannot be combined with seal face in S

Standards and approvals

- EN 12756

Torque transmissions

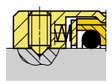

d_1 > 100 mm (3.94")
Torque transmission by 4 **set screws** with cone point. Offset: 90°

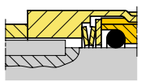

Drive key
(M7S2 / M74S2)

Item	Part no. to DIN 24250	Description
1.1	472	Seal face
1.2	485	Drive collar
1.3	474	Thrust ring
1.4	412.1	O-Ring
1.5	477	Spring
1.6	904	Set screw
2	475	Seat (G9)
3	412.2	O-Ring

Recommended applications

- Process industry
- Water and waste water industry
- Chemical industry
- Marine technology
- Food and beverage industry
- Lube oils
- Low solids content media
- Water / sewage water pumps
- Chemical standard pumps
- Vertical screw pumps
- Gear wheel feed pumps
- Multistage pumps (drive side)
- Circulation of printing colors with viscosity 500 ... 15,000 mm²/s

Seat alternatives

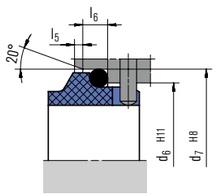

G9 (EN 12756)

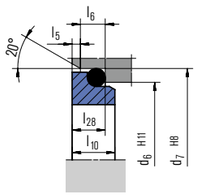

G6 (EN 12756)

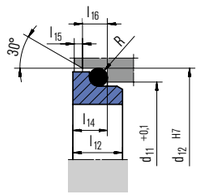

G4

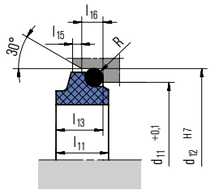

G13

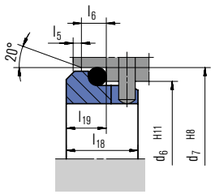

G16 (EN 12756, but l_{1k} is shorter than specified)

Product variants

M74
Dimensions, items and descriptions as for M7N, but with multiple springs (Item no. 1.5). Preferably for d_1 > 100 mm (3.94")

M7F
Shaft diameter: d_1 = max. 100 mm (3.94")
Dimensions, items and descriptions as for type M7N, but with pumping screw. Dependent on direction of rotation! (Viscosity ≤ ISO VG10).

M74F
Shaft diameter: d_1 = 14 ... 200 mm (0.55" ... 7.87")
Dimensions, items and descriptions as for type M7N, but with multiple springs and pumping screw. Dependent on direction of rotation! (Viscosity ≤ ISO VG10)

M7S2
Shaft diameter: d_1 = max. 100 mm (3.94").
Dimensions, items and descriptions as for type M7N, but with drive key. (without item no. 1.6)

M74S2
Shaft diameter: d_1 = 28 ... 200 mm (1.10" ... 7.87")
Dimensions, items and descriptions as for type M7N, but with multiple springs and drive key. (without item no. 1.6)

M78N
Shaft diameter: d_1 = 18 ... 100 mm (0.71" ... 3.94")
Temperature: t = max. 180 °C (356 °F)
Dimensions, items and description as for M7N. Design of the seal face especially for secondary sealing element made of PTFE (T).
Seal face: Carbon graphite antimony impregnated (A), Carbon graphite resin impregnated (B), Silicon carbide (Q1)*
Seat G9: Special cast CrMo steel (S)*, Silicon carbide (Q1)
* Cannot be combined with seal face made of silicon carbide (Q1)

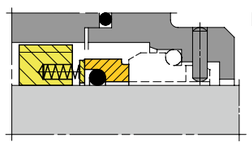

M74F

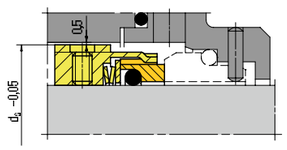

M7F

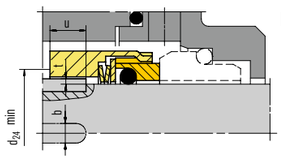

M7S2

Dimensions in mm

d_1	d_3	d_6	d_7	d_8	d_{11}	d_{12}	d_{24}	d_s	l_{1k}	l_3	l_5	l_6	l_7	l_8	l_9	l_{10}	l_{11}	l_{12}	l_{13}	l_{14}	l_{15}	l_{16}	l_{18}	l_{19}	l_{28}	b	f	mx	$u_{max.}$	t	R
14*	25	21.0	25.0	3	20.5	24.6	16	34	35.0	25.0	1.5	4	8.5	17.5	10.0	7.5	10.0	6.5	7.6	5.6	1.2	3.8	–	–	6.6	4	6	M5	10	1.5	1.2
16*	27	23.0	27.0	3	22.0	28.0	18	36	35.0	25.0	1.5	4	8.5	17.5	10.0	7.5	11.5	8.5	9.0	7.5	1.2	3.8	–	–	6.6	4	6	M5	10	1.5	1.5
18*	33	27.0	33.0	3	24.0	30.0	20	38	37.5	26.0	2.0	5	9.0	19.5	11.5	8.5	12.5	9.0	10.0	8.0	1.5	5.0	15	7	7.5	5	7	M5	12	1.1	1.5
20*	35	29.0	35.0	3	29.5	35.0	22	40	37.5	26.0	2.0	5	9.0	19.5	11.5	8.5	12.5	8.5	9.5	7.5	1.5	5.0	15	7	7.5	5	7	M5	12	1.1	1.5
22*	37	31.0	37.0	3	29.5	35.0	24	42	37.5	26.0	2.0	5	9.0	19.5	11.5	8.5	12.5	8.5	9.5	7.5	1.5	5.0	15	7	7.5	6	7	M5	12	1.5	1.5
24*	39	33.0	39.0	3	32.0	38.0	26	44	40.0	28.5	2.0	5	9.0	19.5	11.5	8.5	12.5	8.5	9.5	7.5	1.5	5.0	15	7	7.5	6	8	M5	12	1.5	1.5
25*	40	34.0	40.0	3	32.0	38.0	27	45	40.0	28.5	2.0	5	9.0	19.5	11.5	8.5	12.5	8.5	9.5	7.5	1.5	5.0	15	7	7.5	6	8	M5	12	1.5	1.5
28*	43	37.0	43.0	3	36.0	42.0	30	47	42.5	31.0	2.0	5	9.0	19.5	11.5	8.5	14.0	10.0	11.0	9.0	1.5	5.0	15	7	7.5	6	8	M6	13	1.5	1.5
30*	45	39.0	45.0	3	39.2	45.0	32	49	42.5	31.0	2.0	5	9.0	19.5	11.5	8.5	14.0	11.5	11.0	10.5	1.5	5.0	15	7	7.5	6	8	M6	13	1.5	1.5
32*	47	42.0	48.0	3	42.2	48.0	34	51	42.5	31.0	2.0	5	9.0	19.5	11.5	8.5	14.0	11.5	11.0	10.5	1.5	5.0	15	7	7.5	6	8	M6	13	1.5	1.5
33*	48	42.0	48.0	3	44.2	50.0	35	51	42.5	31.0	2.0	5	9.0	19.5	11.5	8.5	14.5	12.0	11.5	10.5	1.5	5.0	15	7	7.5	6	8	M6	13	1.5	1.5
35*	50	44.0	50.0	3	46.2	52.0	37	54	42.5	31.0	2.0	5	9.0	19.5	11.5	8.5	14.5	12.0	11.5	11.0	1.5	5.0	15	7	7.5	6	8	M6	13	1.5	1.5
38*	55	49.0	56.0	4	49.2	55.0	40	59	45.0	31.0	2.0	6	9.0	22.0	14.0	10.0	14.5	11.3	11.5	10.3	1.5	5.0	16	8	9.0	6	8	M6	13	1.5	1.5
40*	57	51.0	58.0	4	52.2	58.0	42	61	45.0	31.0	2.0	6	9.0	22.0	14.0	10.0	14.5	11.8	11.5	10.8	1.5	5.0	16	8	9.0	6	8	M6	13	1.5	1.5
43*	60	54.0	61.0	4	53.3	62.0	45	65	45.0	31.0	2.0	6	9.0	22.0	14.0	10.0	17.0	13.2	14.3	12.0	2.0	6.0	16	8	9.0	6	8	M6	13	1.5	2.5
45*	62	56.0	63.0	4	55.3	64.0	47	66	45.0	31.0	2.0	6	9.0	22.0	14.0	10.0	17.0	12.8	14.3	11.6	2.0	6.0	16	8	9.0	6	8	M6	13	1.5	2.5
48*	65	59.0	66.0	4	59.7	68.4	50	69	45.0	31.0	2.0	6	9.0	22.0	14.0	10.0	17.0	12.8	14.3	11.6	2.0	6.0	16	8	9.0	6	8	M6	13	1.5	2.5
50*	67	62.0	70.0	4	60.8	69.3	52	71	47.5	32.5	2.5	6	9.0	23.0	15.0	10.5	17.0	12.8	14.3	11.6	2.0	6.0	17	9,5	9.5	6	8	M6	13	1.5	2.5
53*	70	65.0	73.0	4	63.8	72.3	55	75	47.5	32.5	2.5	6	9.0	23.0	15.0	12.0	17.0	13.5	14.3	12.3	2.0	6.0	17	9,5	11.0	6	8	M6	13	1.5	2.5
55*	72	67.0	75.0	4	66.5	75.4	57	76	47.5	32.5	2.5	6	9.0	23.0	15.0	12.0	18.0	14.5	15.3	13.3	2.0	6.0	17	9,5	11.0	6	8	M6	13	1.5	2.5
58*	79	70.0	78.0	4	69.5	78.4	60	83	52.5	37.5	2.5	6	9.0	23.0	15.0	12.0	18.0	14.5	15.3	13.3	2.0	6.0	18	10,5	11.0	8	9	M8	13	1.9	2.5
60*	81	72.0	80.0	4	71.5	80.4	62	85	52.5	37.5	2.5	6	9.0	23.0	15.0	12.0	18.0	14.5	15.3	13.3	2.0	6.0	18	10,5	11.0	8	9	M8	13	1.9	2.5
63*	84	75.0	83.0	4	74.5	83.4	65	88	52.5	37.5	2.5	6	9.0	23.0	15.0	12.0	18.0	14.2	15.3	13.3	2.0	6.0	18	10,5	11.0	8	9	M8	13	1.9	2.5
65*	86	77.0	85.0	4	76.5	85.4	67	95	52.5	37.5	2.5	6	9.0	23.0	15.0	12.0	18.0	14.2	15.3	13.0	2.0	6.0	18	10,5	11.0	8	9	M8	13	1.9	2.5
68*	89	81.0	90.0	4	82.7	91.5	70	93	52.5	34.5	2.5	7	9.0	26.0	18.0	12.5	19.0	14.9	16.0	13.7	2.0	6.0	18,5	11	11.3	8	9	M8	13	1.9	2.5
70*	91	83.0	92.0	4	83.0	92.0	72	95	60.0	42.0	2.5	7	9.0	26.0	18.0	12.5	18.0	14.2	15.3	13.0	2.0	6.0	19	11,5	11.3	8	9	M8	16	1.9	2.5
75*	99	88.0	97.0	4	90.2	99.0	77	105	60.0	42.0	2.5	7	9.0	26.0	18.0	12.5	18.0	15.2	15.3	14.0	2.0	6.0	19	11,5	11.3	8	10	M8	16	1.9	2.5
80*	104	95.0	105.0	4	95.2	104.0	82	109	60.0	41.8	3.0	7	9.0	26.2	18.2	13.0	19.0	16.2	16.3	15.0	2.0	6.0	19	11,5	12.0	8	10	M8	16	1.9	2.5
85*	109	100.0	110.0	4	100.2	109.0	87	114	60.0	41.8	3.0	7	9.0	26.2	18.2	15.0	19.0	16.0	16.3	14.8	2.0	6.0	19	11,5	14.0	8	10	M8	16	1.9	2.5
90*	114	105.0	115.0	4	105.2	114.0	92	119	65.0	46.8	3.0	7	9.0	26.2	18.2	15.0	19.0	16.0	16.3	14.8	2.0	6.0	20,5	13	14.0	10	10	M8	20	2.3	2.5
95*	119	110.0	120.0	4	111.6	120.3	97	124	65.0	47.8	3.0	7	9.0	25.2	17.2	15.0	20.0	17.0	17.3	15.8	2.0	6.0	20,5	13	14.0	10	10	M8	20	2.3	2.5
100*	124	115.0	125.0	4	114.5	123.3	102	129	65.0	47.8	3.0	7	9.0	25.2	17.2	15.0	20.0	17.0	17.3	15.8	2.0	6.0	20,5	13	14.0	10	10	M8	20	2.3	2.5
105	138	122.2	134.3	5	–	–	108	143	67.0	47.0	2.0	10	–	30.0	20.0	–	–	–	–	–	–	–	–	–	–	10	10	M8	20	2.3	–
110	143	128.2	140.3	5	–	–	113	148	67.0	47.0	2.0	10	–	30.0	20.0	–	–	–	–	–	–	–	–	–	–	10	10	M8	20	2.3	–
115	148	136.2	148.3	5	–	–	118	153	67.0	47.0	2.0	10	–	30.0	20.0	–	–	–	–	–	–	–	–	–	–	10	10	M8	20	2.3	–
120	153	138.2	150.3	5	–	–	123	158	67.0	47.0	2.0	10	–	30.0	20.0	–	–	–	–	–	–	–	–	–	–	10	10	M8	20	2.3	–
125	158	142.2	154.3	5	–	–	128	163	67.0	47.0	2.0	10	–	30.0	20.0	–	–	–	–	–	–	–	–	–	–	10	10	M8	20	2.3	–
130	163	146.2	158.3	5	–	–	133	168	67.0	47.0	2.0	10	–	30.0	20.0	–	–	–	–	–	–	–	–	–	–	10	10	M8	20	2.3	–
135	168	152.2	164.3	5	–	–	138	173	67.0	47.0	2.0	10	–	30.0	20.0	–	–	–	–	–	–	–	–	–	–	10	10	M8	20	2.3	–
140	173	156.2	168.3	5	–	–	143	178	67.0	47.0	2.0	10	–	30.0	20.0	–	–	–	–	–	–	–	–	–	–	10	10	M8	20	2.3	–
145	178	161.2	173.3	5	–	–	148	183	67.0	47.0	2.0	10	–	30.0	20.0	–	–	–	–	–	–	–	–	–	–	10	10	M8	20	2.3	–
150	183	168.2	180.3	5	–	–	153	188	69.0	47.0	2.0	10	–	32.0	22.0	–	–	–	–	–	–	–	–	–	–	10	10	M8	20	2.3	–
155	191	173.2	185.3	5	–	–	158	196	80.0	56.0	2.0	12	–	34.0	24.0	–	–	–	–	–	–	–	–	–	–	12	12	M8	24	2.1	–
160	196	178.2	190.3	5	–	–	163	201	80.0	56.0	2.0	12	–	34.0	24.0	–	–	–	–	–	–	–	–	–	–	12	12	M8	24	2.1	–
165	201	183.2	195.3	5	–	–	168	206	80.0	56.0	2.0	12	–	34.0	24.0	–	–	–	–	–	–	–	–	–	–	12	12	M8	24	2.1	–
170	206	188.2	200.3	5	–	–	173	211	80.0	56.0	2.0	12	–	34.0	24.0	–	–	–	–	–	–	–	–	–	–	12	12	M8	24	2.1	–
175	211	193.2	205.3	5	–	–	178	216	80.0	56.0	2.0	12	–	34.0	24.0	–	–	–	–	–	–	–	–	–	–	12	12	M8	24	2.1	–
180	216	207.5	219.3	5	–	–	183	221	84.0	56.0	2.0	12	–	38.0	28.0	–	–	–	–	–	–	–	–	–	–	12	12	M8	24	2.1	–
185	221	212.5	224.3	5	–	–	188	226	84.0	56.0	2.0	12	–	38.0	28.0	–	–	–	–	–	–	–	–	–	–	12	12	M8	24	2.1	–
190	226	217.5	229.3	5	–	–	193	231	84.0	56.0	2.0	12	–	38.0	28.0	–	–	–	–	–	–	–	–	–	–	12	12	M8	24	2.1	–
195	231	222.5	234.3	5	–	–	198	236	84.0	56.0	2.0	12	–	38.0	28.0	–	–	–	–	–	–	–	–	–	–	12	12	M8	24	2.1	–
200	236	227.5	239.3	5	–	–	203	241	84.0	56.0	2.0	12	–	38.0	28.0	–	–	–	–	–	–	–	–	–	–	12	12	M8	24	2.1	–

* EN 12756
d_1 >200 on request

M74-D

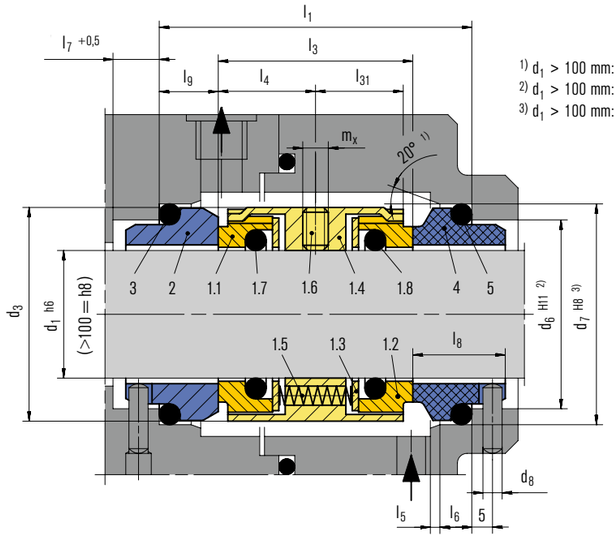

Features

- For plain shafts
- Dual seal
- Unbalanced
- Rotating multiple springs
- Independent of direction of rotation
- Seal concept based on the M7 range
- Variant with pumping screw available (M74F-D)

Advantages

- Efficient stock keeping due to easily interchangeable faces
- Extended selection of materials
- Flexibility in torque transmissions
- EN 12756 (for connection dimensions d_1 up to 100 mm (3.94"))

Operating range (see note on page 1)

Shaft diameter: d_1 = 18 ... 200 mm (0.71" ... 7.87")
Pressure: p_1 = 25 bar (363 PSI)
Temperature: t = –50 °C ... +220 °C (–58 °F ... +428 °F)
Sliding velocity: v_g = 20 m/s (66 ft/s)
Axial movement:
d_1 up to 100 mm: ±0.5 mm
d_1 from 100 mm: ±2.0 mm

Materials

Seal face: Special cast CrMo steel (S),
Silicon carbide (Q1, Q2)
Seat G9: Carbon graphite antimony impregnated (A),
Carbon graphite resin impregnated (B),
Silicon carbide (Q1*, Q2*)
Seat G4: Silicon carbide (Q1*, Q2*)
Seat G6: Silicon carbide (Q1*, Q2*)
Seat G13: Carbon graphite antimony impregnated (A),
Carbon graphite resin impregnated (B)
* Cannot be combined with seal face in S

Standards and approvals

- EN 12756

Item	Part no. to DIN 24250	Description
1.1	472.1	Seal face
1.2	472.2	Seal face
1.3	474	Thrust ring
1.4	485	Drive collar
1.5	477	Spring
1.6	904	Set screw
1.7	412.1	O-Ring
1.8	412.2	O-Ring
2	475.1	Seat (G9)
3	412.3	O-Ring
4	475.2	Seat (G9)
5	412.4	O-Ring

Product variant

M74F-D
Dimensions, items and descriptions
as for M74-D, but with pumping screw (Item no. 1.4).
(Viscosity ≤ ISO VG10).
Dependent on direction of rotation.

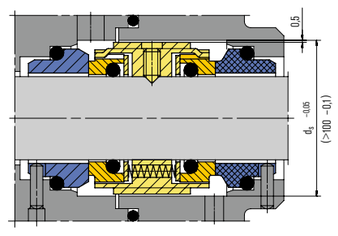

Recommended applications

- Chemical industry
- Process industry
- Low solids content and low abrasive media
- Toxic and hazardous media
- Media with poor lubrication properties
- Adhesives
- Chemical standard pumps

Seat alternatives

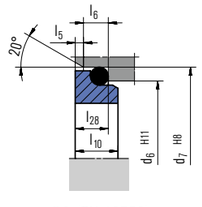

G6 (EN 12756)

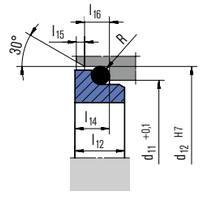

G4

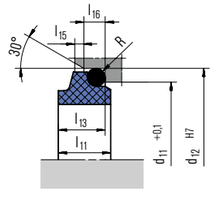

G13

Torque transmissions

d_1 > 100 mm (3.94")
Torque transmission by
4 **set screws** with cone
point. Offset: 90°

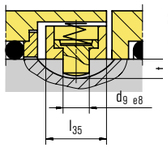

Spring loaded drive pin
(M74-D22)

Dimensions in mm

d_1	d_3	d_6	d_7	d_8	d_9	d_{11}	d_{12}	d_s	l_1	l_3	l_4	l_5	l_6	l_7	l_8	l_9	l_{10}	l_{11}	l_{12}	l_{13}	l_{14}	l_{15}	l_{16}	l_{28}	l_{31}	l_{35}	m_x	t	R
18*	33	27.0	33.0	3	4	24.0	30.0	–	61.0	38	19.0	2.0	5	9	19.5	11.5	8.5	12.5	9.0	10.0	8.0	1.5	5	7.5	17.0	15	M5	3.5	1.5
20*	35	29.0	35.0	3	4	29.5	35.0	–	61.0	38	19.0	2.0	5	9	19.5	11.5	8.5	12.5	8.5	9.5	7.5	1.5	5	7.5	17.0	15	M5	3.5	1.5
22*	37	31.0	37.0	3	4	29.5	35.0	42	61.0	38	19.0	2.0	5	9	19.5	11.5	8.5	12.5	8.5	9.5	7.5	1.5	5	7.5	17.0	15	M5	3.5	1.5
24*	39	33.0	39.0	3	4	32.0	38.0	44	61.0	38	19.0	2.0	5	9	19.5	11.5	8.5	12.5	8.5	9.5	7.5	1.5	5	7.5	17.0	15	M5	3.5	1.5
25*	40	34.0	40.0	3	4	32.0	38.0	45	61.0	38	19.0	2.0	5	9	19.5	11.5	8.5	12.5	8.5	9.5	7.5	1.5	5	7.5	17.0	15	M5	3.5	1.5
28*	43	37.0	43.0	3	4	36.0	42.0	47	62.0	39	19.5	2.0	5	9	19.5	11.5	8.5	14.0	10.0	11.0	9.0	1.5	5	7.5	17.5	15	M6	3.5	1.5
30*	45	39.0	45.0	3	4	39.2	45.0	49	62.0	39	19.5	2.0	5	9	19.5	11.5	8.5	14.0	11.5	11.0	10.5	1.5	5	7.5	17.5	15	M6	3.5	1.5
32*	47	42.0	48.0	3	4	42.2	48.0	51	62.0	39	19.5	2.0	5	9	19.5	11.5	8.5	14.0	11.5	11.0	10.5	1.5	5	7.5	17.5	15	M6	3.5	1.5
33*	48	42.0	48.0	3	4	44.2	50.0	51	62.0	39	19.5	2.0	5	9	19.5	11.5	8.5	14.5	12.0	11.5	10.5	1.5	5	7.5	17.5	15	M6	3.5	1.5
35*	50	44.0	50.0	3	4	46.2	52.0	54	62.0	39	19.5	2.0	5	9	19.5	11.5	8.5	14.5	12.0	11.5	11.0	1.5	5	7.5	17.5	15	M6	3.5	1.5
38*	55	49.0	56.0	4	4	49.2	55.0	59	69.0	41	20.5	2.0	6	9	22.0	14.0	10.0	14.5	11.3	11.5	10.3	1.5	5	9.0	18.5	15	M6	3.5	1.5
40*	57	51.0	58.0	4	4	52.2	58.0	61	70.0	42	21.0	2.0	6	9	22.0	14.0	10.0	14.5	11.8	11.5	10.8	1.5	5	9.0	19.0	15	M6	3.5	1.5
43*	60	54.0	61.0	4	4	53.3	62.0	65	70.0	42	21.0	2.0	6	9	22.0	14.0	10.0	17.0	13.2	14.3	12.0	2.0	6	9.0	19.0	15	M6	3.5	2.5
45*	62	56.0	63.0	4	4	55.3	64.0	66	70.0	42	21.0	2.0	6	9	22.0	14.0	10.0	17.0	12.8	14.3	11.6	2.0	6	9.0	19.0	15	M6	3.5	2.5
48*	65	59.0	66.0	4	4	59.7	68.4	69	70.0	42	21.0	2.0	6	9	22.0	14.0	10.0	17.0	12.8	14.3	11.6	2.0	6	9.0	19.0	15	M6	3.5	2.5
50*	67	62.0	70.0	4	4	60.8	69.3	71	73.0	43	21.5	2.5	6	9	23.0	15.0	10.5	17.0	12.8	14.3	11.6	2.0	6	9.5	19.5	15	M6	3.5	2.5
53*	70	65.0	73.0	4	4	63.8	72.3	75	73.0	43	21.5	2.5	6	9	23.0	15.0	12.0	17.0	13.5	14.3	12.3	2.0	6	11.0	19.5	15	M6	3.5	2.5
55*	72	67.0	75.0	4	4	66.5	75.4	76	73.0	43	21.5	2.5	6	9	23.0	15.0	12.0	18.0	14.5	15.3	13.3	2.0	6	11.0	19.5	15	M8	3.5	2.5
58*	79	70.0	78.0	4	5	69.5	78.4	83	86.0	56	28.0	2.5	6	9	23.0	15.0	12.0	18.0	14.5	15.3	13.3	2.0	6	11.0	23.5	19	M8	3.5	2.5
60*	81	72.0	80.0	4	5	71.5	80.4	85	86.0	56	28.0	2.5	6	9	23.0	15.0	12.0	18.0	14.5	15.3	13.3	2.0	6	11.0	23.5	19	M8	3.5	2.5
63*	84	75.0	83.0	4	5	74.5	83.4	88	85.0	55	27.5	2.5	6	9	23.0	15.0	12.0	18.0	14.2	15.3	13.3	2.0	6	11.0	24.5	19	M8	3.5	2.5
65*	86	77.0	85.0	4	5	76.5	85.4	95	85.0	55	27.5	2.5	6	9	23.0	15.0	12.0	18.0	14.2	15.3	13.0	2.0	6	11.0	24.5	19	M8	3.5	2.5
68*	89	81.0	90.0	4	5	82.7	91.5	93	91.0	55	27.5	2.5	7	9	26.0	18.0	12.5	19.0	14.9	16.0	13.7	2.0	6	11.3	24.5	19	M8	3.5	2.5
70*	91	83.0	92.0	4	5	83.0	92.0	95	92.0	56	28.0	2.5	7	9	26.0	18.0	12.5	18.0	14.2	15.3	13.0	2.0	6	11.3	23.5	19	M8	3.5	2.5
75*	99	88.0	97.0	4	5	90.2	99.0	105	92.0	56	28.0	2.5	7	9	26.0	18.0	12.5	18.0	15.2	15.3	14.0	2.0	6	11.3	25.5	19	M8	3.5	2.5
80*	104	95.0	105.0	4	5	95.2	104.0	109	92.5	56	28.0	3.0	7	9	26.2	18.2	13.0	19.0	16.2	16.3	15.0	2.0	6	12.0	25.5	19	M8	3.5	2.5
85*	109	100.0	110.0	4	5	100.2	109.0	114	92.5	56	28.0	3.0	7	9	26.2	18.2	15.0	19.0	16.0	16.3	14.8	2.0	6	14.0	25.0	19	M8	3.5	2.5
90*	114	105.0	115.0	4	5	105.2	114.0	119	92.5	56	28.0	3.0	7	9	26.2	18.2	15.0	19.0	16.0	16.3	14.8	2.0	6	14.0	25.5	19	M8	3.5	2.5
95*	119	110.0	120.0	4	5	111.6	120.3	124	90.5	56	28.0	3.0	7	9	25.2	17.2	15.0	20.0	17.0	17.3	15.8	2.0	6	14.0	25.0	19	M8	3.5	2.5
100*	124	115.0	125.0	4	5	114.5	123.3	129	90.5	56	28.0	3.0	7	9	25.2	17.2	15.0	20.0	17.0	17.3	15.8	2.0	6	14.0	25.0	19	M8	3.5	2.5
105	138	122.2	134.3	5	7	–	–	143	108.0	68	34.0	2.0	10	–	30.0	20.0	–	–	–	–	–	–	–	–	30.5	22	M8	3.5	–
110	143	128.2	140.3	5	7	–	–	148	110.0	70	35.0	2.0	10	–	30.0	20.0	–	–	–	–	–	–	–	–	31.5	22	M8	3.5	–
115	148	136.2	148.3	5	7	–	–	153	110.0	70	35.0	2.0	10	–	30.0	20.0	–	–	–	–	–	–	–	–	31.5	22	M8	3.5	–
120	153	138.2	150.3	5	7	–	–	158	110.0	70	35.0	2.0	10	–	30.0	20.0	–	–	–	–	–	–	–	–	31.5	22	M8	3.5	–
125	158	142.2	154.3	5	7	–	–	163	110.0	70	35.0	2.0	10	–	30.0	20.0	–	–	–	–	–	–	–	–	31.5	22	M8	3.5	–
130	163	146.2	158.3	5	7	–	–	168	110.0	70	35.0	2.0	10	–	30.0	20.0	–	–	–	–	–	–	–	–	31.5	22	M8	3.5	–
135	168	152.2	164.3	5	7	–	–	173	110.0	70	35.0	2.0	10	–	30.0	20.0	–	–	–	–	–	–	–	–	31.5	22	M8	3.5	–
140	173	156.2	168.3	5	7	–	–	178	110.0	70	35.0	2.0	10	–	30.0	20.0	–	–	–	–	–	–	–	–	31.5	22	M8	3.5	–
145	178	161.2	173.3	5	7	–	–	183	110.0	70	35.0	2.0	10	–	30.0	20.0	–	–	–	–	–	–	–	–	31.5	22	M8	3.5	–
150	183	168.2	180.3	5	7	–	–	188	114.0	70	35.0	2.0	10	–	32.0	22.0	–	–	–	–	–	–	–	–	31.5	22	M8	3.5	–
155	191	173.2	185.3	5	7	–	–	196	127.0	79	39.5	2.0	12	–	34.0	24.0	–	–	–	–	–	–	–	–	35.5	22	M8	3.5	–
160	196	178.2	190.3	5	7	–	–	201	127.0	79	39.5	2.0	12	–	34.0	24.0	–	–	–	–	–	–	–	–	35.5	22	M8	3.5	–
165	201	183.2	195.3	5	7	–	–	206	127.0	79	39.5	2.0	12	–	34.0	24.0	–	–	–	–	–	–	–	–	35.5	22	M8	3.5	–
170	206	188.2	200.3	5	7	–	–	211	127.0	79	39.5	2.0	12	–	34.0	24.0	–	–	–	–	–	–	–	–	35.5	22	M8	3.5	–
175	211	193.2	205.3	5	7	–	–	216	127.0	79	39.5	2.0	12	–	34.0	24.0	–	–	–	–	–	–	–	–	35.5	22	M8	3.5	–
180	216	207.5	219.3	5	7	–	–	221	135.0	79	39.5	2.0	12	–	38.0	28.0	–	–	–	–	–	–	–	–	35.5	22	M8	3.5	–
185	221	212.5	224.3	5	7	–	–	226	135.0	79	39.5	2.0	12	–	38.0	28.0	–	–	–	–	–	–	–	–	35.5	22	M8	3.5	–
190	226	217.5	229.3	5	7	–	–	231	135.0	79	39.5	2.0	12	–	38.0	28.0	–	–	–	–	–	–	–	–	35.5	22	M8	3.5	–
195	231	222.5	234.3	5	7	–	–	236	135.0	79	39.5	2.0	12	–	38.0	28.0	–	–	–	–	–	–	–	–	35.5	22	M8	3.5	–
200	236	227.5	239.3	5	7	–	–	241	135.0	79	39.5	2.0	12		38.0	28.0	–	–	–	–	–	–	–	–	35.5	22	M8	3.5	–

HA211

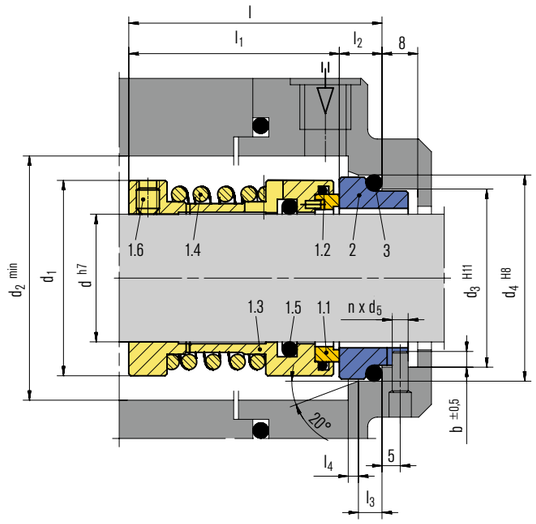

Features

- Single seal
- Unbalanced
- Independent of direction of rotation
- Positive torque transmission due to bayonet drive between seal head and drive collar
- O-Ring groove for ventilation prevents solids build-up and enhances flexibility

Operating range (see note on page 1)

Pressure: p = 12 bar (174 PSI)
Temperature: t = –20 °C ... +160 °C (–4 °F ... +320 °F)
Sliding velocity: ... 20 m/s (66 ft/s)
Viscosity: ... 300 Pa·s
Solids content: ... 7 %

Materials

Seal face: Silicon carbide (Q1)
Seat: Silicon carbide (Q1)
Secondary seals: EPDM (E), FKM (V)
Metal parts: 1.4401 (G)

Recommended applications

- Process industry
- Pulp and and paper industry
- High-viscosity liquids
- Pulp suspensions
- Process pumps
- Pulp pumps

Item	Description
1.1	Seal face
1.2	O-Ring
1.3	Drive collar
1.4	Spring
1.5	O-Ring
1.6	Set screw
2	Seat
3	O-Ring

Dimensions in mm

d	d_1	d_2	d_3	d_4	d_5	l	l_1	l_2	l_3	l_4	B
20	34	36	29	35	3	51	41	10.0	5,5	2.0	3.5
24	38	40	33	39	3	53	43	10.0	5,5	2.0	3.5
25	39	41	34	40	3	53	43	10.0	5,5	2.0	3.5
28	42	44	37	43	3	55	45	10.0	5,5	2.0	3.5
30	44	46	39	45	3	55	45	10.0	5,5	2.0	3.5
32	46	48	42	48	3	55	45	10.0	5,5	2.0	3.5
33	47	49	42	48	3	55	45	10.0	5,5	2.0	3.5
35	49	51	44	50	3	59	49	10.0	5,5	2.0	3.5
38	54	58	49	56	4	64	53	11.0	6	2.0	4.0
40	56	60	51	58	4	66	55	11.0	6	2.0	4.0
43	59	63	54	61	4	66	55	11.0	6	2.0	4.0
45	61	65	56	63	4	66	55	11.0	6	2.0	4.5
48	64	68	59	66	4	66	55	11.0	6	2.0	4.5
50	66	70	62	70	4	73	60	13.0	6	2.5	4.5
53	69	73	65	73	4	74	61	13.0	6	2.5	5.0
55	71	75	67	75	4	74	61	13.0	6	2.5	5.0
60	78	85	72	80	4	76	63	13.0	6	2.5	5.0
63	81	88	75	83	4	76	63	13.0	6	2.5	5.0
65	84	90	77	85	4	80	67	13.0	6	2.5	5.0
70	90	95	83	92	4	83	68	15.0	7	2.5	5.0
75	95	104	88	97	4	87	72	15.0	7	2.5	5.0
80	100	109	95	105	4	87.5	72	15.5	7	3.0	6.0
85	107	114	100	110	4	92.5	77	15.5	7	3.0	6.0
90	112	119	105	115	4	92.5	77	15.5	7	3.0	6.0
95	119	124	110	120	4	97.5	82	15.5	7	3.0	6.0
100	124	129	115	125	4	97.5	82	15.5	7	3.0	6.0

H7N

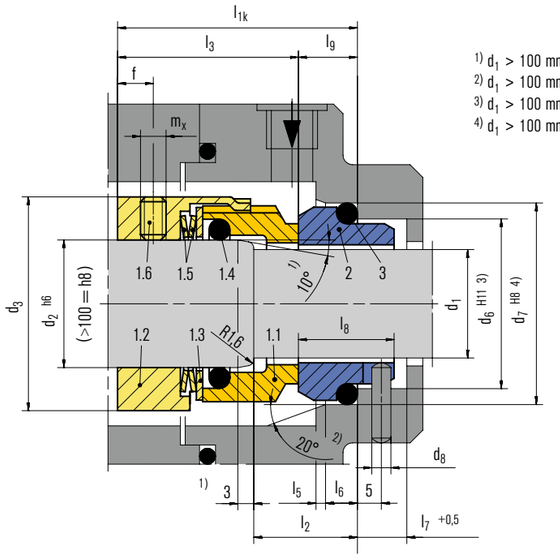

Features

- For stepped shafts
- Single seal
- Balanced
- Super-Sinus-spring or multiple springs rotating
- Independent of direction of rotation
- Integrated pumping device available (H7F, H75F)
- Variant with seat cooling available (H75G115)

Advantages

- Universal application opportunities (standardization)
- Efficient stock keeping due to easily interchangeable faces
- Extended selection of materials
- Flexibility in torque transmissions
- Self cleaning effect
- Short Installation length possible (G16)

Operating range (see note on page 1)

Shaft diameter: d_1 = 14 ... 100 mm (0.55" ... 3.94")
(Single spring: d_1 = max. 100 mm (3.94"))
Pressure:
p_1 = 80 bar (1,160 PSI) for d_1 = 14 ... 100 mm,
p_1 = 25 bar (363 PSI) for d_1 = 100 ... 200 mm,
p_1 = 16 bar (232 PSI) for d_1 > 200 mm
Temperature: t = –50 °C ... +220 °C (–58 °F ... +428 °F)
Sliding velocity: v_g = 20 m/s (66 ft/s)
Axial movement:
d_1 ... 22 mm: ±1.0 mm
d_1 24 ... 58 mm: ±1.5 mm
d_1 from 60 mm: ±2.0 mm

Materials

Seal face: Silicon carbide (Q1, Q2), Carbon graphite antimony impregnated (A), Aluminium oxide (V), Special cast CrMo steel (S)
Seat G9: Carbon graphite antimony impregnated (A), Carbon graphite resin impregnated (B), Silicon carbide (Q1*, Q2*)
Secondary seals: EPDM (E), NBR (P), FKM (V), FFKM (K)
Springs: CrNiMo steel (G)
Metal parts: CrNiMo steel (G), Duplex (G1)
* Cannot be combined with seal face in S

Standards and approvals

- EN 12756

Recommended applications

- Refining technology
- Power plant technology
- Petrochemical industry
- Oil and Gas industry
- Hot water applications
- Light hydrocarbons
- Boiler feed pumps
- Process pumps

Item	Part no. to DIN 24250	Description
1.1	472	Seal face
1.2	485	Drive collar
1.3	474	Thrust ring
1.4	412.1	O-Ring
1.5	477	Spring
1.6	904	Set screw
2	475	Seat G9
3	412.2	O-Ring

Product variants

H75
Shaft diameter: d_1 = 28 ... 200 mm (1.10" ... 7.87")
As H7N, but with multiple springs in sleeves (Item no. 1.5)
Axial movement: ±2 ... 4 mm, dependent on diameter.

H76
Shaft diameter: d_1 = 14 ... 100 mm (0.55" ... 3.94")
Dimensions, items and descriptions as for H7N, but with special single spring (Item no. 1.5) for compensating large axial movements (±4 mm).

H7F
Shaft diameter: d_1 = max. 100 mm (3.94")
Dimensions, items and descriptions as for H7N, but with single spring and pumping screw. Dependent on direction of rotation! (Viscosity ≤ ISO VG10).

H75F
Shaft diameter: d_1 = 28 ... 200 mm (1.10" ... 7.87")
Dimensions, items and descriptions as for H7N, but with multiple springs and pumping screw. Dependent on direction of rotation! (Viscosity ≤ ISO VG10).

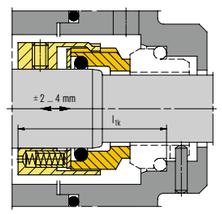

H75

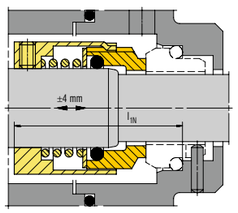

H76

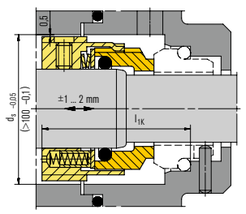

H7F/H75F

Seat alternatives

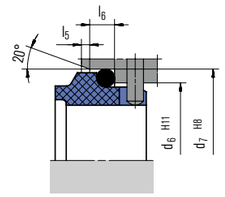

G9 (EN 12756)

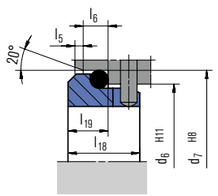

G16 (EN 12756, but l_{1k} and l_2 are shorter than specified)

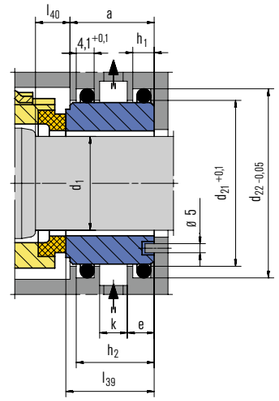

G115 Cooled seat especially for hot water applications.

Torque transmissions

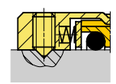

d_1 > 100 mm (3.94")
Torque transmission by 4 **set screws** with cone point. Offset: 90°

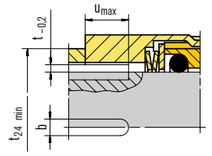

Drive key
(H7S2/H75S2)

Dimensions in mm

d_1	d_2	d_3	d_6	d_7	d_8	d_{24}	d_{21}	d_{22}	ds	l_{1k}	l_{1N}	l_2	l_3	l_5	l_6	l_7	l_8	l_9	l_{39}	l_{40}	a	b	e	f	h_1	h_2	k	m_x	$u_{max.}$	t
14*	18	33	21.0	25.0	3	20	–	–	38	42.5	–	18	32.5	1.5	4	8.5	17.5	10.0	–	–	–	5	–	6.0	–	–	–	M5	9	1.1
16*	20	35	23.0	27.0	3	22	–	–	40	42.5	–	18	32.5	1.5	4	8.5	17.5	10.0	–	–	–	5	–	6.0	–	–	–	M5	9	1.1
18*	22	37	27.0	33.0	3	24	–	–	42	45.0	55	20	33.5	2.0	5	9.0	19.5	11.5	–	–	–	6	–	7.0	–	–	–	M5	9	1.5
20*	24	39	29.0	35.0	3	26	–	–	44	45.0	60	20	33.5	2.0	5	9.0	19.5	11.5	–	–	–	6	–	5.5	–	–	–	M5	9	1.5
22*	26	41	31.0	37.0	3	28	–	–	45	45.0	60	20	33.5	2.0	5	9.0	19.5	11.5	–	–	–	6	–	8.0	–	–	–	M5	9	1.5
24*	28	43	33.0	39.0	3	30	–	–	47	47.5	60	20	36.0	2.0	5	9.0	19.5	11.5	–	–	–	6	–	5.5	–	–	–	M6	9	1.5
25*	30	45	34.0	40.0	3	32	–	–	49	47.5	60	20	36.0	2.0	5	9.0	19.5	11.5	–	–	–	6	–	5.5	–	–	–	M6	9	1.5
28*	33	48	37.0	43.0	3	35	44.65	50.57	51	50.0	65	20	38.5	2.0	5	9.0	19.5	11.5	24.0	8.5	24.0	6	8.0	8.0	6.6	22.6	9	M6	12	1.5
30*	35	50	39.0	45.0	3	37	47.83	53.75	54	50.0	65	20	38.5	2.0	5	9.0	19.5	11.5	24.5	9.0	24.0	6	8.0	8.0	6.6	22.6	9	M6	12	1.5
32*	38	55	42.0	48.0	3	40	47.83	53.75	59	50.0	65	20	38.5	2.0	5	9.0	19.5	11.5	24.5	9.0	24.0	6	8.0	8.0	6.6	22.6	9	M6	12	1.5
33*	38	55	42.0	48.0	3	40	47.83	53.75	59	50.0	65	20	38.5	2.0	5	9.0	19.5	11.5	24.5	9.0	24.0	6	8.0	8.0	6.6	22.6	9	M6	12	1.5
35*	40	57	44.0	50.0	3	42	51.00	56.92	61	50.0	65	20	38.5	2.0	5	9.0	19.5	11.5	24.5	9.0	24.0	6	8.0	8.0	6.6	22.6	9	M6	12	1.5
38*	43	60	49.0	56.0	4	45	54.18	60.10	65	52.5	75	23	38.5	2.0	6	9.0	22.0	14.0	26.0	11.0	24.0	6	8.0	8.0	6.6	22.6	9	M6	12	1.5
40*	45	62	51.0	58.0	4	47	60.53	66.45	66	52.5	75	23	38.5	2.0	6	9.0	22.0	14.0	26.0	11.0	24.0	6	8.0	8.0	6.6	22.6	9	M6	12	1.5
43*	48	65	54.0	61.0	4	50	63.70	69.62	69	52.5	75	23	38.5	2.0	6	9.0	22.0	14.0	26.0	11.0	24.0	6	8.0	8.0	6.6	22.6	9	M6	12	1.5
45*	50	67	56.0	63.0	4	52	63.70	69.62	71	52.5	75	23	38.5	2.0	6	9.0	22.0	14.0	26.0	11.0	24.0	6	8.0	8.0	6.6	22.6	9	M6	12	1.5
48*	53	70	59.0	66.0	4	55	66.88	72.80	75	52.5	85	23	38.5	2.0	6	9.0	22.0	14.0	26.0	11.0	24.0	6	8.0	8.0	6.6	22.6	9	M6	12	1.5
50*	55	72	62.0	70.0	4	57	70.05	75.97	76	57.5	85	25	42.5	2.5	6	9.0	23.0	15.0	26.5	12.5	24.0	6	8.0	8.0	6.6	22.6	9	M6	12	1.5
53*	58	79	65.0	73.0	4	60	76.40	82.32	83	57.5	85	25	42.5	2.5	6	9.0	23.0	15.0	26.5	12.5	24.0	8	8.0	9.0	6.6	22.6	9	M8	12	1.9
55*	60	81	67.0	75.0	4	62	76.40	82.32	85	57.5	85	25	42.5	2.5	6	9.0	23.0	15.0	28.5	12.5	26.0	8	8.0	9.0	6.6	24.6	11	M8	12	1.9
58*	63	84	70.0	78.0	4	65	79.58	85.50	88	62.5	85	25	47.5	2.5	6	9.0	23.0	15.0	28.5	12.5	26.0	8	8.0	9.0	6.6	24.6	11	M8	15	1.9
60*	65	86	72.0	80.0	4	67	82.75	88.67	95	62.5	95	25	47.5	2.5	6	9.0	23.0	15.0	28.5	12.5	26.0	8	8.0	9.0	6.6	24.6	11	M8	15	1.9
63*	68	89	75.0	83.0	4	70	85.93	91.85	93	62.5	95	25	47.5	2.5	6	9.0	23.0	15.0	28.5	12.5	26.0	8	8.0	9.0	6.6	24.6	11	M8	14	1.9
65*	70	91	77.0	85.0	4	72	85.93	91.85	95	62.5	95	25	47.5	2.5	6	9.0	23.0	15.0	28.5	12.5	26.0	8	8.0	9.0	6.6	24.6	11	M8	15	1.9
70*	75	99	83.0	92.0	4	77	89.10	95.02	105	70.0	95	28	52.0	2.5	7	9.0	26.0	18.0	30.5	14.5	26.0	8	8.0	10.0	6.6	24.6	11	M8	15	1.9
75*	80	104	88.0	97.0	4	82	98.63	104.55	109	70.0	105	28	52.0	2.5	7	9.0	26.0	18.0	30.5	14.5	26.0	8	8.0	10.0	6.6	24.6	11	M8	15	1.9
80*	85	109	95.0	105.0	4	87	101.80	107.72	114	70.0	105	28	51.8	3.0	7	9.0	26.2	18.2	30.2	14.0	26.0	8	8.0	10.0	6.6	24.6	11	M8	15	1.9
85*	90	114	100.0	110.0	4	92	108.15	114.07	119	75.0	105	28	56.8	3.0	7	9.0	26.2	18.2	30.2	14.0	26.0	10	8.0	10.0	6.6	24.6	11	M8	18	2.3
90*	95	119	105.0	115.0	4	97	114.50	120.42	124	75.0	105	28	56.8	3.0	7	9.0	26.2	18.2	30.2	14.0	26.0	10	8.0	10.0	6.6	24.6	11	M8	18	2.3
95*	100	124	110.0	120.0	4	102	117.68	123.60	129	75.0	105	28	57.8	3.0	7	9.0	25.2	17.2	29.2	14.0	26.0	10	8.0	10.0	6.6	24.6	11	M8	18	2.3
100*	105	129	115.0	125.0	4	107	124.03	129.95	134	75.0	105	28	57.8	3.0	7	9.0	25.2	17.2	29.2	14.0	26.0	10	8.0	10.0	6.6	24.6	11	M8	18	2.3
105*	115	148	122.2	134.3	5	118	128.98	134.90	153	73.0	–	32	53.0	2.0	10	–	30.0	20.0	29.2	15.2	26.0	10	8.0	10.0	6.6	24.6	11	M8	18	2.3
110*	120	153	128.2	140.3	5	123	135.30	141.20	158	73.0	–	32	53.0	2.0	10	–	30.0	20.0	32.5	14.5	30.0	10	9.5	10.0	6.6	28.6	13	M8	18	2.3
115*	125	158	136.2	148.3	5	128	140.30	146.20	163	73.0	–	32	53.0	2.0	10	–	30.0	20.0	32.5	14.5	30.0	10	9.5	10.0	6.6	28.6	13	M8	18	2.3
120*	130	163	138.2	150.3	5	133	145.30	151.20	168	73.0	–	32	53.0	2.0	10	–	30.0	20.0	32.5	14.5	30.0	10	9.5	10.0	6.6	28.6	13	M8	18	2.3
125*	135	168	142.2	154.3	5	138	150.30	156.20	173	73.0	–	32	53.0	2.0	10	–	30.0	20.0	32.5	14.5	30.0	10	9.5	10.0	6.6	28.6	13	M8	18	2.3
130*	140	173	146.2	158.3	5	143	155.30	161.20	178	73.0	–	32	53.0	2.0	10	–	30.0	20.0	32.5	14.5	30.0	10	9.5	10.0	6.6	28.6	13	M8	18	2.3
135*	145	178	152.2	164.3	5	148	160.30	166.20	183	73.0	–	32	53.0	2.0	10	–	30.0	20.0	32.5	14.5	30.0	10	9.5	10.0	6.6	28.6	13	M8	18	2.3
140*	150	183	156.2	168.3	5	153	165.30	171.20	188	73.0	–	32	53.0	2.0	10	–	30.0	20.0	32.5	14.5	30.0	10	9.5	10.0	6.6	28.6	13	M8	18	2.3
145*	155	191	161.2	173.3	5	158	172.30	178.20	196	83.0	–	34	63.0	2.0	10	–	30.0	20.0	34.5	16.5	32.0	12	10.0	12.0	7.1	30.1	14	M8	22	2.1
150*	160	196	168.2	180.3	5	163	177.30	183.20	201	85.0	–	36	63.0	2.0	10	–	32.0	22.0	34.5	16.5	32.0	12	10.0	12.0	7.1	30.1	14	M8	22	2.1
155*	165	201	173.2	185.3	5	168	182.30	188.20	206	87.0	–	38	63.0	2.0	12	–	34.0	24.0	34.5	16.5	32.0	12	10.0	12.0	7.1	30.1	14	M8	22	2.1
160*	170	206	178.2	190.3	5	173	187.30	193.20	211	87.0	–	38	63.0	2.0	12	–	34.0	24.0	34.5	16.5	32.0	12	10.0	12.0	7.1	30.1	14	M8	22	2.1
165*	175	211	183.2	195.3	5	178	192.30	198.20	216	87.0	–	38	63.0	2.0	12	–	34.0	24.0	34.5	16.5	32.0	12	10.0	12.0	7.1	30.1	14	M8	22	2.1
170*	180	216	188.2	200.3	5	183	197.30	203.20	221	87.0	–	38	63.0	2.0	12	–	34.0	24.0	37.0	16.5	34.5	12	10.0	12.0	7.1	32.1	16	M8	22	2.1
175*	185	221	193.2	205.3	5	188	202.30	208.20	226	87.0	–	38	63.0	2.0	12	–	34.0	24.0	37.0	16.5	34.5	12	10.0	12.0	7.1	32.1	16	M8	22	2.1
180*	190	226	207.5	219.3	5	193	207.30	213.20	231	91.0	–	42	63.0	2.0	12	–	38.0	28.0	37.0	16.5	34.5	12	10.0	12.0	7.1	32.1	16	M8	22	2.1
185*	195	231	212.5	224.3	5	198	212.30	218.20	236	91.0	–	42	63.0	2.0	12	–	38.0	28.0	37.0	16.5	34.5	12	10.0	12.0	7.1	32.1	16	M8	22	2.1
190*	200	236	217.5	229.3	5	203	217.30	223.20	241	91.0	–	42	63.0	2.0	12	–	38.0	28.0	37.0	16.5	34.5	12	10.0	12.0	7.1	32.1	16	M8	22	2.1
195*	205	245	222.5	234.2	5	208	225.30	231.20	250	94.0	–	43	66.0	2.0	12	–	38.0	28.0	37.0	17.5	34.5	12	10.0	14.0	7.1	32.1	16	M10	22	2.1
200*	210	250	227.5	239.3	5	213	230.30	236.20	255	94.0	–	43	66.0	2.0	12	–	38.0	28.0	37.0	17.5	34.5	12	10.0	14.0	7.1	32.1	16	M10	22	2.1

* EN 12756

LB500

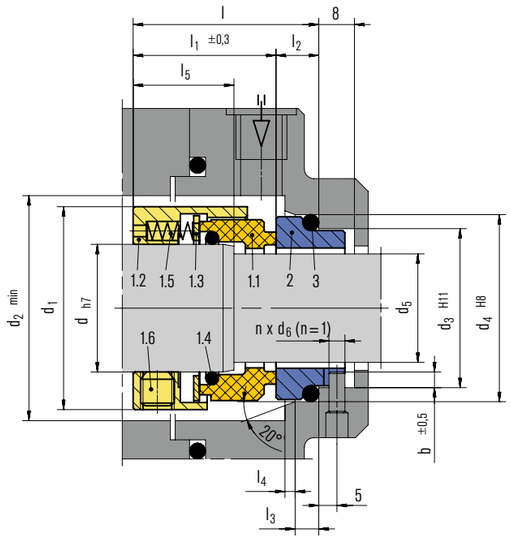

Features

- Single seal
- Balanced
- Independent of direction of rotation
- Rotating multiple springs

Advantages

- API 682 (Type A) compliant
- Fits to EN and ANSI seal chambers
- Optimized, narrow width seal face design

Operating range (see note on page 1)

Pressure: p = vacuum ... 35 bar (508 PSI)
Temperature: t = –20 °C ... +200 °C (–4 °F ... +392 °F)
Sliding velocity: v_g = ... 20 m/s (66 ft/s)
Viscosity: ... 500 mPa·s
Solids content: ... 0.5 %

Materials

Seal face: Carbon graphite resin impregnated (B),
High density carbon graphite
Seat: Silicon carbide (Q1)
Secondary seals: FKM (V)
Metal parts: 1.4401 (G)

Standards and approvals

- API 682/ISO 21049 (Category 1)
- ANSI

Recommended applications

- Chemical industry
- Process industry
- Acids
- Alkaline solutions
- Salt solutions
- Low viscosity oils
- Monomers
- Hydrocarbons
- Water
- Seawater
- Process pumps

Item	Description
1.1	Seal face
1.2	Drive collar
1.3	Thrust ring
1.4	O-Ring
1.5	Spring
1.6	Set screw
2	Seat
3	O-Ring

Product variant

Configuration sample
acc. to API 682 (1CW-FX)

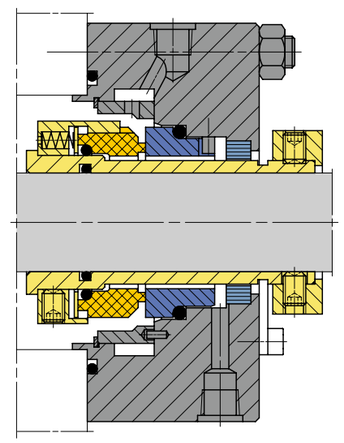

Dimensions in mm

d	d_1	d_2	d_3	d_4	d_5	d_6	l	l_1	l_2	l_3	l_4	l_5	b
25	39	41	29	35	20	3	44	34	10	5.5	2.0	24	3.5
28	42	44	33	39	24	3	44	34	10	5.5	2.0	24	3.5
30	44	46	34	40	25	3	44	34	10	5.5	2.0	24	3.5
32	46	48	37	43	27	3	44	34	10	5.5	2.0	24	3.5
33	47	49	37	43	28	3	44	34	10	5.5	2.0	24	3.5
35	49	51	39	45	30	3	44	34	10	5.5	2.0	24	3.5
38	55	58	42	48	33	3	45	35	10	5	2.0	25	3.5
40	57	60	44	50	35	3	45	35	10	5	2.0	25	3.5
42	59	62	49	56	37	4	48	37	11	5	2.0	25	4.0
43	60	63	49	56	38	4	48	37	11	5	2.0	25	4.0
45	62	65	51	58	40	4	48	37	11	5	2.0	25	4.5
48	65	68	54	61	43	4	48	37	11	5	2.0	25	4.5
50	67	70	56	63	45	4	48	37	11	6	2.0	25	4.5
53	70	73	59	66	48	4	48	37	11	6	2.0	25	4.5
55	72	75	62	70	50	4	50	37	13	6	2.5	25	4.5
60	77	85	67	75	55	4	50	37	13	6	2.5	25	5.0
63	80	88	70	78	58	4	50	37	13	6	2.5	25	5.0
65	82	90	72	80	60	4	50	37	13	6	2.5	25	5.0
70	87	95	77	85	65	4	50	37	13	6	2.5	25	5.0
75	92	104	83	92	70	4	53	38	15	7	2.5	25	5.0
80	97	109	88	97	75	4	53	38	15	7	2.5	25	5.0
85	102	114	95	105	80	4	53	37.5	15.5	7	3.0	25	6.0
90	107	119	100	110	85	4	53	37.5	15.5	7	3.0	25	6.0
95	112	124	105	115	90	4	53	37.5	15.5	7	3.0	25	6.0
100	117	129	110	120	95	4	53	37.5	15.5	7	3.0	25	6.0
105	122	134	115	125	100	4	53	37.5	15.5	7	3.0	25	6.0
110	127	139	120	130	105	4	53	37.5	15.5	7	3.0	25	6.0

H74-D

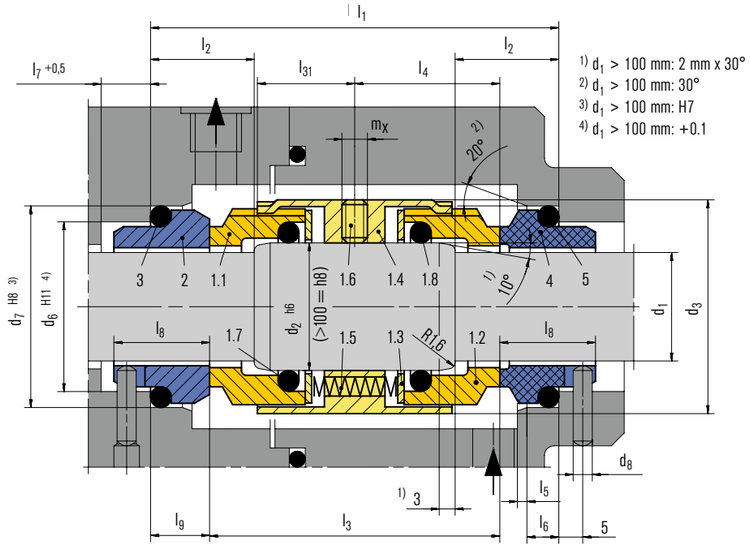

Features

- For stepped shafts
- Dual seal
- Balanced
- Rotating multiple springs
- Independent of direction of rotation
- Seal concept based on the H7 range
- Variant with pumping screw available (H74F-D)

Advantages

- Efficient stock keeping due to easily interchangeable faces
- Extended selection of materials
- Flexibility in torque transmissions
- Insensitive to low solids contents
- EN 12756
  (For connection dimensions d_1 up to 100 mm (3.94"))

Operating range (see note on page 1)

Shaft diameter: d_1 = 14 ... 200 mm (0.55" ... 7.87")
Pressure:
p_1 = 80 bar (1,160 PSI) for d_1 = 14 ... 100 mm,
p_1 = 25 bar (363 PSI) for d_1 = 100 ... 200 mm,
p_1 = 16 bar (232 PSI) for d_1 > 200 mm
Temperature: t = –50 °C ... +220 °C (–58 °F ... +428 °F)
Sliding velocity: v_g = 20 m/s (66 ft/s)
Axial movement:
d_1 up to 100 mm: ±0.5 mm
d_1 from 100 mm: ±2.0 mm

Materials

Seal face: Silicon carbide (Q1, Q2), Carbon graphite antimony impregnated (A), Aluminium oxide (V), Special cast CrMo steel (S)
Seat G9: Carbon graphite antimony impregnated (A), Carbon graphite resin impregnated (B), Silicon carbide (Q1*, Q2*)
Secondary seals: EPDM (E), NBR (P), FKM (V), FFKM (K)
Springs: CrNiMo steel (G)
Metal parts: CrNiMo steel (G), Duplex (G1)
* Cannot be combined with seal face in S

Standards and approvals

- EN 12756

Item	Part no. to DIN 24250	Description
1.1	472.1	Seal face
1.2	472.2	Seal face
1.3	474	Thrust ring
1.4	485	Drive collar
1.5	477	Spring
1.6	904	Set screw
1.7	412.1	O-Ring
1.8	412.2	O-Ring
2	475.1	Seat (G9)
3	412.3	O-Ring
4	475.2	Seat (G9)
5	412.4	O-Ring

Recommended applications

- Chemical industry
- Process industry
- Low solids content and low abrasive media
- Toxic and hazardous media
- Media with poor lubrication properties
- Adhesives
- Chemical standard pumps

Seat alternatives

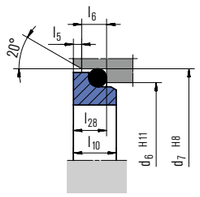

G6 (EN 12756)

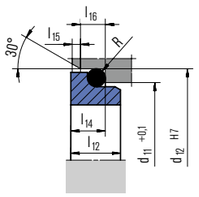

G4

Torque transmission

d_{12} ≥ 105 mm
Torque transmission by 4 **set screws** with cone point. Offset: 90°

Product variant

H74F-D
Dimensions, items and descriptions
as for H74-D, but with pumping screw (Item no. 1.4).
Dependent on direction of rotation.

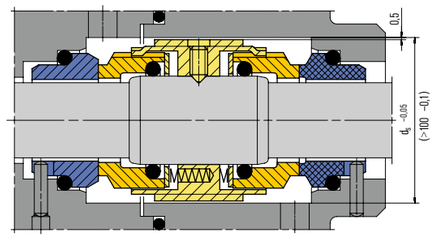

Dimensions in mm

d_1	d_2	d_3	d_6	d_7	d_8	d_{11}	d_{12}	d_s	l_1	l_2	l_3	l_4	l_5	l_6	l_7	l_8	l_9	l_{10}	l_{12}	l_{14}	l_{15}	l_{16}	l_{28}	l_{31}	m_x	R
14	18	33	21.0	25.0	3	24.0	30.0	–	73.0	18	53.0	26.5	1.5	4	8.5	17.5	10.0	7.5	6.5	5.6	1.5	5	6.6	17.0	M5	1.2
16	20	35	23.0	27.0	3	29.5	35.0	–	73.0	18	53.0	26.5	1.5	4	8.5	17.5	10.0	7.5	8.5	7.5	1.5	5	6.6	17.0	M5	1.5
18	22	37	27.0	33.0	3	29.5	35.0	42	76.0	20	53.0	26.5	2.0	5	9.0	19.5	11.5	8.5	9.0	8.0	1.5	5	7.5	17.0	M5	1.5
20	24	39	29.0	35.0	3	32.0	38.0	44	76.0	20	53.0	26.5	2.0	5	9.0	19.5	11.5	8.5	8.5	7.5	1.5	5	7.5	17.0	M5	1.5
22	26	41	31.0	37.0	3	32.0	38.0	45	76.0	20	53.0	26.5	2.0	5	9.0	19.5	11.5	8.5	8.5	7.5	1.5	5	7.5	17.0	M5	1.5
24	28	43	33.0	39.0	3	36.0	42.0	47	77.0	20	54.0	27.0	2.0	5	9.0	19.5	11.5	8.5	8.5	7.5	1.5	5	7.5	17.5	M6	1.5
25	30	45	34.0	40.0	3	39.2	45.0	49	77.0	20	54.0	27.0	2.0	5	9.0	19.5	11.5	8.5	8.5	7.5	1.5	5	7.5	17.5	M6	1.5
28	33	48	37.0	43.0	3	42.2	48.0	51	77.0	20	54.0	27.0	2.0	5	9.0	19.5	11.5	8.5	10.0	9.0	1.5	5	7.5	17.5	M6	1.5
30	35	50	39.0	45.0	3	44.2	50.0	54	77.0	20	54.0	27.0	2.0	5	9.0	19.5	11.5	8.5	11.5	10.5	1.5	5	7.5	17.5	M6	1.5
32	38	55	42.0	48.0	3	46.2	52.0	59	79.0	20	56.0	28.0	2.0	5	9.0	19.5	11.5	8.5	11.5	10.5	1.5	5	7.5	18.5	M6	1.5
33	38	55	42.0	48.0	3	49.2	55.0	59	79.0	20	56.0	28.0	2.0	5	9.0	19.5	11.5	8.5	12.0	10.5	1.5	5	7.5	18.5	M6	1.5
35	40	57	44.0	50.0	3	52.2	58.0	61	80.0	20	57.0	28.5	2.0	5	9.0	19.5	11.5	8.5	12.0	11.0	1.5	5	7.5	19.0	M6	1.5
38	43	60	49.0	56.0	4	53.3	62.0	65	85.0	23	57.0	28.5	2.0	6	9.0	22.0	14.0	10.0	11.3	10.3	2.0	6	9.0	19.0	M6	1.5
40	45	62	51.0	58.0	4	55.3	64.0	66	85.0	23	57.0	28.5	2.0	6	9.0	22.0	14.0	10.0	11.8	10.8	2.0	6	9.0	19.0	M6	1.5
43	48	65	54.0	61.0	4	59.7	68.4	69	85.0	23	57.0	28.5	2.0	6	9.0	22.0	14.0	10.0	13.2	12.0	2.0	6	9.0	19.0	M6	2.5
45	50	67	56.0	63.0	4	60.8	69.3	71	84.0	23	56.0	28.0	2.0	6	9.0	22.0	14.0	10.0	12.8	11.6	2.0	6	9.0	19.5	M6	2.5
48	53	70	59.0	66.0	4	63.8	72.3	75	84.0	23	56.0	28.0	2.0	6	9.0	22.0	14.0	10.0	12.8	11.6	2.0	6	9.0	19.5	M6	2.5
50	55	72	62.0	70.0	4	66.5	75.4	76	93.0	25	63.0	31.5	2.5	6	9.0	23.0	15.0	10.5	12.8	11.6	2.0	6	9.5	19.5	M6	2.5
53	58	79	65.0	73.0	4	69.5	78.4	83	97.0	25	67.0	33.5	2.5	6	9.0	23.0	15.0	12.0	13.5	12.3	2.0	6	11.0	23.5	M8	2.5
55	60	81	67.0	75.0	4	71.5	80.4	85	97.0	25	67.0	33.5	2.5	6	9.0	23.0	15.0	12.0	14.5	13.3	2.0	6	11.0	23.5	M8	2.5
58	63	84	70.0	78.0	4	74.5	83.4	88	104.0	25	74.0	37.0	2.5	6	9.0	23.0	15.0	12.0	14.5	13.3	2.0	6	11.0	24.5	M8	2.5
60	65	86	72.0	80.0	4	76.5	85.4	95	104.0	25	74.0	37.0	2.5	6	9.0	23.0	15.0	12.0	14.5	13.3	2.0	6	11.0	24.5	M8	2.5
63	68	89	75.0	83.0	4	82.7	91.5	93	109.0	25	79.0	39.5	2.5	6	9.0	23.0	15.0	12.0	14.2	13.3	2.0	6	11.0	24.5	M8	2.5
65	70	91	77.0	85.0	4	83.0	92.0	95	98.0	25	68.0	34.0	2.5	6	9.0	23.0	15.0	12.0	14.2	13.0	2.0	6	11.0	23.5	M8	2.5
70	75	99	83.0	92.0	4	90.2	99.0	105	112.5	28	76.4	38.2	2.5	7	9.0	26.0	18.0	12.5	14.9	13.7	2.0	6	11.3	25.5	M8	2.5
75	80	104	88.0	97.0	4	95.2	104.0	109	112.5	28	76.4	38.2	2.5	7	9.0	26.0	18.0	12.5	14.2	13.0	2.0	6	11.3	25.5	M8	2.5
80	85	109	95.0	105.0	4	100.2	109.0	114	112.5	28	76.0	38.0	3.0	7	9.0	26.2	18.2	12.5	15.2	14.0	2.0	6	11.3	25.0	M8	2.5
85	90	114	100.0	110.0	4	105.2	114.0	119	112.5	28	76.0	38.0	3.0	7	9.0	26.2	18.2	13.0	16.2	15.0	2.0	6	12.0	25.5	M8	2.5
90	95	119	105.0	115.0	4	111.6	120.3	124	112.5	28	76.0	38.0	3.0	7	9.0	26.2	18.2	15.0	16.0	14.8	2.0	6	14.0	25.0	M8	2.5
95	100	124	110.0	120.0	4	114.5	123.3	129	110.5	28	76.0	38.0	3.0	7	9.0	25.2	17.2	15.0	16.0	14.8	2.0	6	14.0	25.0	M8	2.5
100	105	129	115.0	125.0	4	–	–	134	110.5	28	76.0	38.0	3.0	7	9.0	25.2	17.2	15.0	17.0	15.8	–	–	14.0	25.5	M8	2.5
105	115	148	122.2	134.3	5	–	–	153	122.0	32	82.0	41.0	2.0	10	–	30.0	20.0	15.0	17.0	15.8	–	–	14.0	31.5	M8	2.5
110	120	153	128.2	140.3	5	–	–	158	122.0	32	82.0	41.0	2.0	10	–	30.0	20.0	–	–	–	–	–	–	31.5	M8	–
115	125	158	136.2	148.3	5	–	–	163	122.0	32	82.0	41.0	2.0	10	–	30.0	20.0	–	–	–	–	–	–	31.5	M8	–
120	130	163	138.2	150.3	5	–	–	168	122.0	32	82.0	41.0	2.0	10	–	30.0	20.0	–	–	–	–	–	–	31.5	M8	–
125	135	168	142.2	154.3	5	–	–	173	122.0	32	82.0	41.0	2.0	10	–	30.0	20.0	–	–	–	–	–	–	31.5	M8	–
130	140	173	146.2	158.3	5	–	–	178	122.0	32	82.0	41.0	2.0	10	–	30.0	20.0	–	–	–	–	–	–	31.5	M8	–
135	145	178	152.2	164.3	5	–	–	183	122.0	32	82.0	41.0	2.0	10	–	30.0	20.0	–	–	–	–	–	–	31.5	M8	–
140	150	183	156.2	168.3	5	–	–	188	122.0	32	82.0	41.0	2.0	10	–	30.0	20.0	–	–	–	–	–	–	31.5	M8	–
145	155	191	161.2	173.3	5	–	–	196	133.0	34	93.0	46.5	2.0	10	–	30.0	20.0	–	–	–	–	–	–	35.5	M8	–
150	160	196	168.2	180.3	5	–	–	201	137.0	36	93.0	46.5	2.0	10	–	32.0	22.0	–	–	–	–	–	–	35.5	M8	–
155	165	201	173.2	185.3	5	–	–	206	141.0	38	93.0	46.5	2.0	12	–	34.0	24.0	–	–	–	–	–	–	35.5	M8	–
160	170	206	178.2	190.3	5	–	–	211	141.0	38	93.0	46.5	2.0	12	–	34.0	24.0	–	–	–	–	–	–	35.5	M8	–
165	175	211	183.2	195.3	5	–	–	216	141.0	38	93.0	46.5	2.0	12	–	34.0	24.0	–	–	–	–	–	–	35.5	M8	–
170	180	216	188.2	200.3	5	–	–	221	141.0	38	93.0	46.5	2.0	12	–	34.0	24.0	–	–	–	–	–	–	35.5	M8	–
175	185	221	193.2	205.3	5	–	–	226	141.0	38	93.0	46.5	2.0	12	–	34.0	24.0	–	–	–	–	–	–	35.5	M8	–
180	190	226	207.5	219.3	5	–	–	231	149.0	42	93.0	46.5	2.0	12	–	38.0	28.0	–	–	–	–	–	–	35.5	M8	–
185	195	231	212.5	224.3	5	–	–	236	149.0	42	93.0	46.5	2.0	12	–	38.0	28.0	–	–	–	–	–	–	35.5	M8	–
190	200	236	217.5	229.3	5	–	–	241	149.0	42	93.0	46.5	2.0	12	–	38.0	28.0	–	–	–	–	–	–	35.5	M8	–
195	205	245	222.5	234.3	5	–	–	250	151.0	43	95.0	47.5	2.0	12	–	38.0	28.0	–	–	–	–	–	–	–	M10	–
200	210	250	227.5	239.3	5	–	–	255	151.0	43	95.0	47.5	2.0	12	–	38.0	28.0	–	–	–	–		–	–	M10	–

EK700

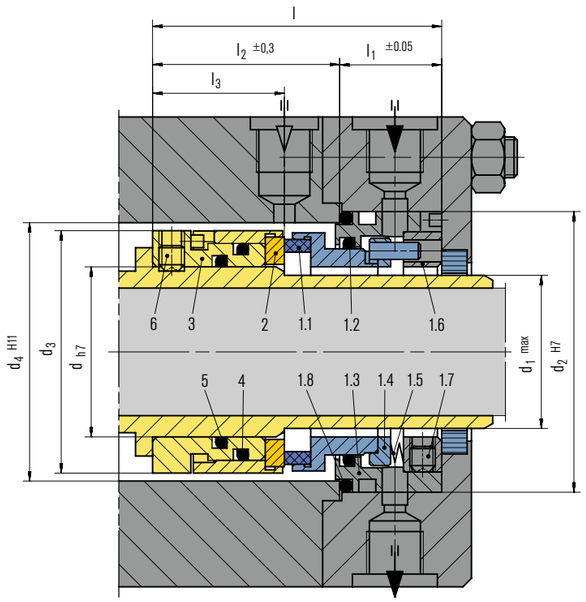

Features

- Single seal
- Balanced
- Independent of direction of rotation
- Stationary multiple springs

Advantages

- Unitized construction allows easy conversion
- Springs located on the atmospheric side, no clogging
- High precision rotating assembly reduces "swashing" of seal head

Operating range (see note on page 1)

Pressure: p = ... 35 bar (... 508 PSI)
Temperature: t = 160 °C (320 °F)
Sliding velocity: v_g = 30 m/s (98 ft/s)
Viscosity: ... 0.5 Pa·s
Solids content: ... 0.5 %

Materials

Seal face: High density carbon graphite
Seat: Silicon carbide (Q1)
Secondary seals: FKM (V)
Metal parts: 1.4401 (G)

Recommended applications

- Chemical industry
- Refining technology
- Petrochemical industry
- Lubrication oil
- Light oil
- Gasoline
- Naphtha
- Water
- Process pumps

Item	Description
1.1	Seal face
1.2	O-Ring
1.3	Housing
1.4	Thrust ring
1.5	Spring
1.6	Thrust ring
1.7	Set screw
1.8	O-Ring
2	Seat
3	Drive collar
4	O-Ring
5	O-Ring
6	Set screw

Dimensions in mm

d	d_1	d_2	d_3	d_4	l	l_1	l_2	l_3
20	18	42	33	36	63	23	40	30
25	23	47	39	41	65	24	41	30
30	28	53	44	46	66	24	42	30
35	33	58	49	51	66	24	42	30
40	38	66	57	60	68	24	44	31
45	43	71	60	65	68	24	44	31
50	48	76	67	70	68	24	44	31
55	53	81	72	75	69	25	44	31
60	58	91	79	85	72.5	27.5	45	31
65	63	96	86	90	77	29	48	31
70	68	101	92	95	79.5	28.5	51	32
75	73	110	99	104	79.5	28.5	51	32
80	78	115	102	109	79.5	28.5	51	32
85	83	120	108	114	80.5	28.5	52	33
90	88	125	115	119	81.5	29.5	52	33
95	93	130	118	124	81.5	29.5	52	33
100	98	135	124	129	81.5	29.5	52	33
110	110	145	134	139	84.5	29.5	55	36
120	120	160	147	150	91	34	57	38
130	130	170	157	160	96	37	59	40
140	140	185	172	175	98	38	60	40
150	150	200	184	190	100	38	62	42

Pulace

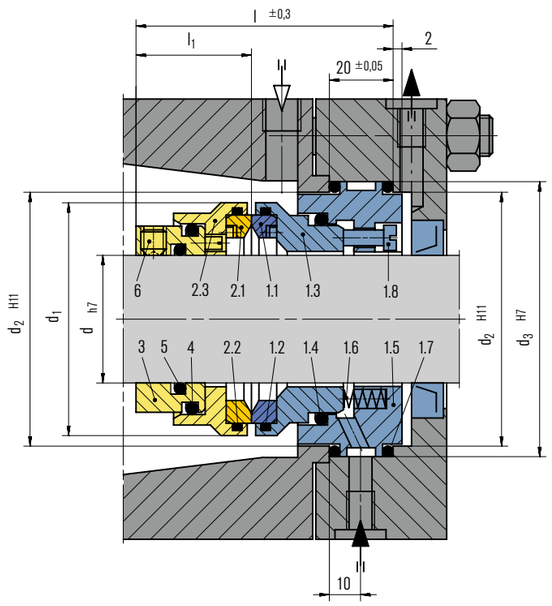

Features

- Single seal
- Balanced
- Independent of direction of rotation
- Stationary multiple springs
- Springs and pins not in contact with the medium

Advantages

- Stationary seat and/or seal face replaceable
- Can be adopted under positive pressure or under back pressure
- Operation in vacuum without additional seat locking possible

Operating range (see note on page 1)

Pressure: p = 10 bar (145 PSI)
Temperature: t = –20 °C ... +200 °C (–4 °F ... +392 °F)
Sliding velocity: v_g = 20 m/s (66 ft/s)
Viscosity: ... 100 Pa·s
Solids content: ... 20 %

Materials

Seal face and seat: Silicon carbide (Q1),
Tungsten carbide (U7)
Metal parts: 1.4401 (G)
Secondary seals: EPDM (E)

Recommended applications

- Sugar industry
- Pulp and paper industry
- Water and waste water technology
- Highly concentrated black water
- Green water
- White water
- Pulp suspensions
- Chemical solutions
- Alkaline solutions
- Slurries
- Highly viscous liquids
- Raw sludge pumps
- Thick juice pumps
- Conveying and bottling of dairy products

Item	Description
1.1	Seal face
1.2	O-Ring
1.3	Retainer
1.4	O-Ring
1.5	Adapter
1.6	Spring
1.7	O-Ring
1.8	Drive screw
2.1	Seat
2.2	O-Ring
2.3	Retainer
3	Drive collar
4	O-Ring
5	O-Ring
6	Set screw

Dimensions in mm

d	d_1	d_2	d_3	l	l_1
20	46	51	57	71	34
25	51	58	64	71	34
30	56	63	69	71	34
35	62	68	74	75	37
40	69	76	82	80	38
45	78	83	89	80	38
50	78	86	92	80	38
55	86	92	98	80	38
60	91	98	104	78	37
65	97	102	108	81	38
70	102	109	115	80	38
75	107	114	120	82	39
80	112	119	125	82	40
85	118	124	130	85	40
90	128	137	143	85	42
95	128	137	143	85	42
100	135	144	150	85	42

HRN

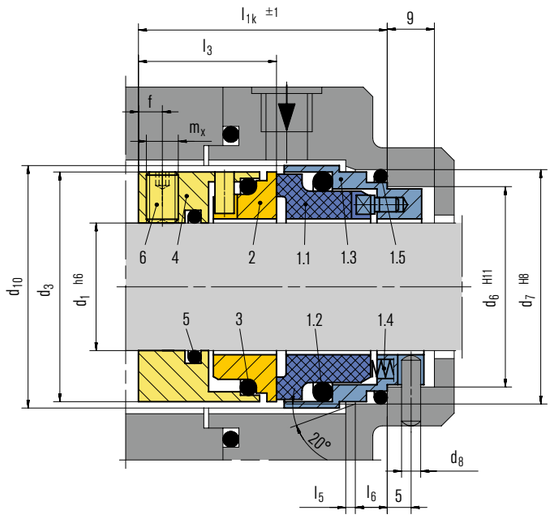

Features

- Single seal
- Balanced
- Independent of direction of rotation
- Stationary springs
- Dual seals in tandem as well as back-to-back arrangements (also in combination with H10 seal)

Advantages

- Spring unit averted from the product so no sticking and clogging of the springs
- Safe operation (no fractures) because of seal face locking by square pin
- Suitable for pressure reversals
- Operation in vacuum without additional seat locking possible
- No damage of the shaft by a dynamically loaded O-Ring
- Small installation sizes
- Best suitable for conversions, no adaptations of the pump
- Insensitive to solid containing and abrasive media
- Advantages of a balanced seal even with plain shafts
- Insensitive to shaft movements because of the stationary design

Operating range (see note on page 1)

Shaft diameter: d = 18 ... 100 mm (0.71" ... 3.94")
Pressure: p_1* = 25 bar (363 PSI)
Temperature: t = –40 °C ... +220 °C (–40 °F ... +428 °F)
Sliding velocity: v_g = 20 m/s (66 ft/s)
Axial movement: ±1.0 mm

* Additional seat locking is not needed in vacuum operation. For operation under vacuum it is necessary to arrange for quenching on the atmosphere side.

Materials

Seal face: Carbon graphite resin impregnated (B), Silicon carbide (Q1)
Seat: Silicon carbide (Q1)
Secondary seals: FKM (V), NBR (P), FFKM (K), PTFE (T)
Springs: Hastelloy® C-4 (M)
Metal parts: CrNiMo steel (G)

Standards and approvals

- EN 12756

Recommended applications

- Water and waste water technology
- Chemical industry
- Refining technology
- Dirty, abrasive and solid containing media
- Fugitive hydrocarbons (no API seal!)
- Sticky and stringy media
- Chemical standard pumps
- Sewage pumps

Item	Part DIN 24250	Description
1.1	472	Seal face
1.2	412.1	O-Ring
1.3	485	Retainer
1.4	477	Spring
1.5	412.2	O-Ring
2	475	Seat
3	412.3	O-Ring
4	485	Drive collar
5	412.4	O-Ring
6	904	Set screw

Dimensions in mm

d_1	d_3	d_6	d_7	d_8	d_{10}	l_{1k}	l_3	l_5	l_6	f	m_x
18	33	27	33	3	34.7	37.5	19.5	2.0	5	3.0	4
20	35	29	35	3	36.7	37.5	19.5	2.0	5	3.0	4
22	37	31	37	3	38.7	37.5	19.5	2.0	5	3.0	4
24	39	33	39	3	40.7	40.0	20.5	2.0	5	3.5	5
25	40	34	40	3	41.7	40.0	20.5	2.0	5	3.5	5
28	43	37	43	3	44.7	42.5	21.5	2.0	5	3.5	5
30	45	39	45	3	46.7	42.5	21.5	2.0	5	3.5	5
32	48	42	48	3	49.7	42.5	21.5	2.0	5	3.5	5
33	48	42	48	3	49.7	42.5	21.5	2.0	5	3.5	5
35	50	44	50	3	51.7	42.5	21.5	2.0	5	3.5	5
38	56	49	56	4	57.7	45.0	24.0	2.0	6	4.0	6
40	58	51	58	4	59.7	45.0	24.0	2.0	6	4.0	6
43	61	54	61	4	62.7	45.0	24.0	2.0	6	4.0	6
45	63	56	63	4	64.7	45.0	24.0	2.0	6	4.0	6
48	66	59	66	4	67.7	45.0	24.0	2.0	6	4.0	6
50	70	62	70	4	71.7	47.5	25.0	2.5	6	4.0	6
53	73	65	73	4	74.7	47.5	25.0	2.5	6	4.0	6
55	75	67	75	4	76.7	47.5	25.0	2.5	6	4.0	6
58	78	70	78	4	80.5	52.5	28.0	2.5	6	4.0	6
60	80	72	80	4	82.5	52.5	28.0	2.5	6	4.0	6
63	83	75	83	4	85.5	52.5	28.0	2.5	6	4.0	6
65	85	77	85	4	87.5	52.5	28.0	2.5	6	4.0	6
68	90	81	90	4	92.5	52.5	28.0	2.5	7	4.0	6
70	92	83	92	4	94.5	60.0	34.0	2.5	7	6.0	8
75	97	88	97	4	100.5	60.0	34.0	2.5	7	6.0	8
80	105	95	105	4	108.5	60.0	34.0	3.0	7	6.0	8
85	110	100	110	4	113.5	60.0	34.0	3.0	7	6.0	8
90	115	105	115	4	118.5	65.0	39.0	3.0	7	10.0	8
95	120	110	120	4	123.5	65.0	39.0	3.0	7	10.0	8
100	125	115	125	4	128.5	65.0	39.0	3.0	7	10.0	8

H75VN

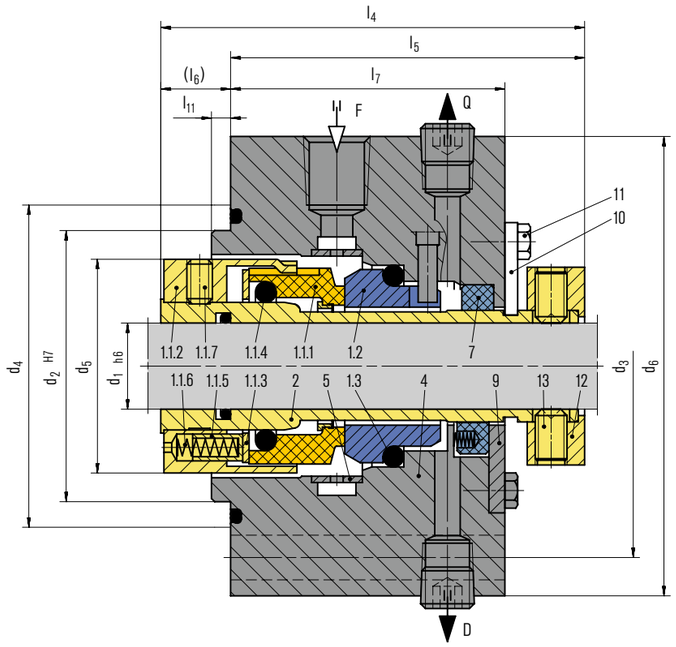

Features

- Single seal
- Cartridge unit available
- Design acc. to API 682/ISO 21049
- Category 2 and 3, Type A, Arrangement 1
- Independent of direction of rotation
- Rotating multiple springs
- Integrated pumping device available (H75VP)

Advantages

- "Low-Emission-Seal" acc. to the American STLE-limits
- Universally applicable both for retrofits or original equipment
- Efficient stock-keeping due to standardized components
- Extended selection of materials
- Extended field of operation in terms of temperature and pressure
- Metal parts also in special materials available

Operating range (see note on page 1)

Shaft diameter: d = 20 ... 110 mm (0.79" ... 4.33")*
Pressure: p_1 = 40 bar (580 PSI)
Temperature: t = –40 °C ... +220 °C (–40 °F ... +428 °F)
Sliding velocity: v_g = 23 m/s (75 ft/s)
Axial movement: ±2.0 ... 4.0 mm depending on diameter and installation situation

* Other sizes on request

Materials

Seal face: Carbon graphite antimony impregnated (A)
Seat: Silicon carbide (Q1, Q2)
Secondary seals: EPDM (E), NBR (P), FKM (V), FFKM (K)
Springs: Hastelloy® C-4 (M)
Metal parts: CrNiMo steel (G), Duplex (G1)
Hastelloy® C-4 (M)

Standards and approvals

- API 682/ISO 21049

Recommended applications

- Refining technology
- Petrochemical industry
- Oil and gas industry
- Light hydrocarbons
- API 610/ISO 13709 pumps
- Process pumps

Item	Description
1.1.1	Seal face
1.1.2	Driver
1.1.3	Thrust ring
1.1.4, 1.3	O-Ring
1.1.5	Sleeve
1.1.6	Spring
1.1.7	Set screw
1.2	Seat
2	Shaft sleeve
4	Housing
5	Insert
7	Throttle ring
9	Washer
10	Assembly fixture
11	Hexagon bolt
12	Set ring
13	Set screw

Product variants

H75VP
Dimensions, items and descriptions as H75VN, but with pumping ring. Shorter installation length possible.

H75N
Dimensions, items and descriptions as H75VN.
Seal face: Silicon carbide (Q1, Q2)
Seat: Silicon carbide (Q1, Q2)

Dimensions in mm

API/d_1	API/d_2	API/d_3	API/d_4	d_5	d_6	l_4	l_5	$l_{(6)}$	l_7	l_{11}	Overall length
20	70	105	85	50	138	95.0	94.0	1.0	76.0	6	**100**
30	80	115	95	62	148	100.5	98.0	2.5	77.0	6	**104**
40	90	125	105	72	158	105.5	98.5	7.0	77.5	6	**125**
50	100	140	115	86	168	111.5	99.5	12.0	78.5	6	**140**
60	120	160	135	99	188	120.5	102.0	18.5	81.0	6	**160**
70	130	170	145	109	198	124.5	106.0	18.0	81.0	6	**170**
80	140	180	155	119	208	129.0	106.0	23.0	81.0	6	**180**
90	160	205	175	129	238	129.0	106.0	23.0	81.0	6	**205**
100	170	215	185	153	248	133.0	109.0	24.0	81.0	6	**215**
110	180	225	195	168	258	133.0	109.0	24.0	81.0	6	**225**

Dimensions in inch

API/d_1	API/d_2	API/d_3	API/d_4	d_5	d_6	l_4	l_5	$l_{(6)}$	l_7	l_{11}	Overall length
0.787	2.756	4.134	3.346	1.969	5.433	3.74	3.701	0.039	2.992	0.236	**3.937**
1.181	3.15	4.528	3.74	2.441	5.827	3.957	3.858	0.098	3.031	0.236	**4.094**
1.575	3.543	4.921	4.134	2.835	6.22	4.154	3.878	0.276	3.051	0.236	**4.921**
1.969	3.937	5.512	4.528	3.386	6.614	4.39	3.917	0.472	3.091	0.236	**5.512**
2.362	4.724	6.299	5.315	3.898	7.402	4.744	4.016	0.728	3.189	0.236	**6.299**
2.756	5.118	6.693	5.709	4.291	7.795	4.902	4.173	0.709	3.189	0.236	**6.693**
3.543	5.512	7.087	6.102	4.685	8.189	5.079	4.173	0.906	3.189	0.236	**7.087**
3.543	6.299	8.071	6.89	5.079	9.37	5.079	4.173	0.906	3.189	0.236	**8.071**
3.937	6.693	8.465	7.283	6.024	9.764	5.236	4.291	0.945	3.189	0.236	**8.465**
4.331	7.087	8.858	7.677	6.614	10.157	5.236	4.291	0.945	3.189	0.236	**8.858**

H75VK

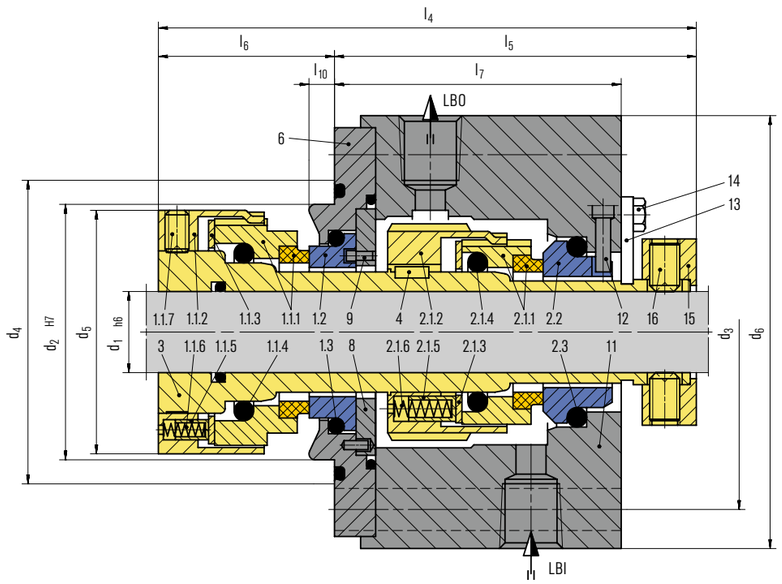

Features

- Dual seal
- Cartridge unit
- Design acc. to API 682/ISO 21049
- Category 2 and 3, Type A, Arrangement 2 or 3
- Bi-directional design available
- Rotating multiple springs
- Integrated pumping device
- Suitable for pressure reversals

Advantages

- Universally applicable both for retrofits or original equipment
- Efficient stock-keeping due to standardized components
- Extended selection of materials
- Extended field of operation in terms of temperature and pressure
- Metal parts also in special materials available
- Safe operation due to metal torque transmission at the rotating seal face

Operating range (see note on page 1)

Shaft diameter: d = 20 ... 110 mm (0.79" ... 4.33")*
Pressure: p_1 = 40 bar (580 PSI)
Temperature: t = –40 ... +220 °C (–40 °F ... +428 °F)
Sliding velocity: v_g = 23 m/s (75 ft/s)
Axial movement: ±2.0 ... 4.0 mm depending on diameter and installation situation

* Other sizes on request

Materials

Seal face: Carbon graphite antimony impregnated (A), Silicon carbide (Q1, Q2)
Seat: Silicon carbide (Q1, Q2)
Secondary seals: EPDM (E), NBR (P), FKM (V), FFKM (K)
Springs: Hastelloy® C-4 (M)
Metal parts: CrNiMo steel (G), Duplex (G1)
Hastelloy® C-4 (M)

Standards and approvals

- API 682/ISO 21049

Item	Description
1.1.1, 2.1.1	Seal face
1.1.2, 2.1.2	Driver
1.1.3, 2.1.3	Thrust ring
1.1.4, 2.1.4, 1.3, 2.3	O-Ring
1.1.5, 2.1.5	Sleeve
1.1.6, 2.1.6	Spring
1.1.7	Set screw
1.2, 2.2	Seat
3	Shaft sleeve
4	Key
6	Adapter
8	Washer
9	Pin
11	Housing
12	HSH Cap screw
13	Assembly fixture
14	Hexagon bolt
15	Set ring
16	Set screw

Recommended applications

- Refining technology
- Petrochemical industry
- Oil and gas industry
- Light volatile and highly viscous hydrocarbons
- API 610/ISO 13709 pumps
- Process pumps

Product variant

H75VKP-D
Dual seal in back-to-back arrangement. Suitable for API 610 table 6 seal chambers.

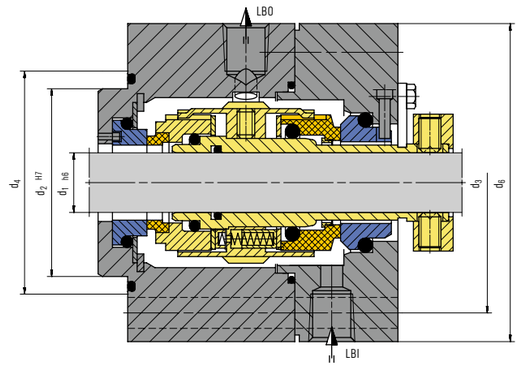

Dimensions in mm

API/d_1	API/d_2	API/d_3	API/d_4	d_5	d_6	l_4	l_5	l_6	l_7	l_{10}	Axial movement
20	70	105	85	60	129	144.0	97.0	47.0	81.0	6.0	±2.00
30	80	115	95	70	139	145.5	96.0	49.5	77.5	8.0	±2.00
40	90	125	105	82	149	146.5	96.5	50.0	78.0	8.0	±2.00
50	100	140	115	94	168	158.0	106.5	51.5	88.0	10.5	±2.00*
60	120	160	135	114	188	165.0	107.5	57.5	90.2	4.5	±2.00*
70	130	170	145	124	198	170.0	107.5	62.5	85.0	10.0	±2.00*
80	140	180	155	134	208	175.0	107.5	67.5	85.0	12.5	±2.00*
90	160	205	175	146	238	178.8	116.9	61.9	94.4	6.9	±3.00
100	170	215	185	163	248	185.0	117.5	67.5	92.0	11.5	±2.00*
110	180	225	195	173	258	188.0	116.5	71.5	91.0	15.5	±3.00

* For larger installation space an axial movement of ±3.0 mm is possible

Dimensions in inch

API/d_1	API/d_2	API/d_3	API/d_4	d_5	d_6	l_4	l_5	l_6	l_7	l_{10}	Axial movement
0.787	2.756	4.134	3.346	2.362	5.079	5.669	3.819	1.850	3.189	0.236	±0.079
1.181	3.150	4.528	3.740	2.756	5.472	5.728	3.780	1.949	3.051	0.315	±0.079
1.575	3.543	4.921	4.134	3.228	5.866	5.768	3.799	1.969	3.071	0.315	±0.079
1.969	3.937	5.512	4.528	3.701	6.614	6.220	4.193	2.028	3.465	0.413	±0.079*
2.362	4.724	6.299	5.315	4.488	7.402	6.496	4.232	2.264	3.551	0.177	±0.079*
2.756	5.118	6.693	5.709	4.882	7.795	6.693	4.232	2.461	3.346	0.394	±0.079*
3.150	5.512	7.087	6.102	5.276	8.189	6.890	4.232	2.657	3.346	0.492	±0.079*
3.543	6.299	8.071	6.890	5.748	9.370	7.039	4.602	2.437	3.717	0.272	±0.118
3.937	6.693	8.465	7.283	6.417	9.764	7.283	4.626	2.657	3.622	0.453	±0.079*
4.331	7.087	8.858	7.677	6.811	10.157	7.402	4.587	2.815	3.583	0.61	±0.118

* For larger installation space an axial movement of 0.118" is possible

HJ92N

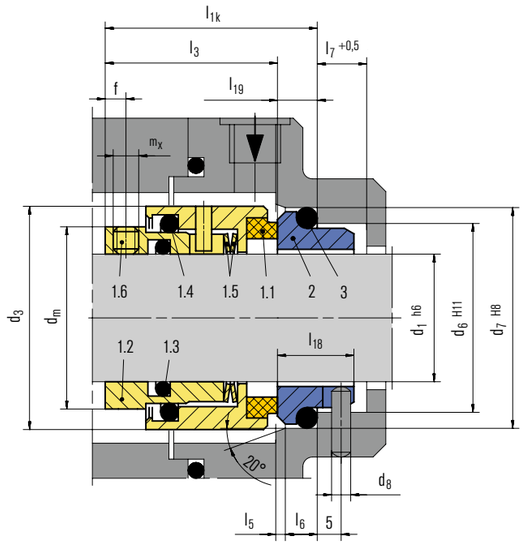

Features

- For unstepped shafts
- Single seal
- Balanced
- Independent of direction of rotation
- Encapsulated rotating spring

Advantages

- Especially designed for solids containing and highly viscous media
- Springs are protected from the product
- Rugged and reliable design
- No damage of the shaft by dynamically loaded O-Ring
- Universal application
- Variant for operation under vacuum available
- Variant for sterile operation available

Operating range (see note on page 1)

Shaft diameter: d_1 = 18 ... 100 mm (0.71" ... 4")
Pressure: p_1* = 0.8 abs ... 25 bar (12 abs. ... 363 PSI)
Temperature: t = –50 °C ... +220 °C (–58 °F ... +430 °F)
Sliding velocity: v_g = 20 m/s (66 ft/s)
Axial movement: ±0.5 mm

* An integral stationary seat lock is not needed within the permissible low pressure range. For prolonged operation under vacuum it is necessary to arrange for quenching on the atmospheric side.

Materials

Seal face: Carbon graphite antimony impregnated (A), Carbon graphite resin impregnated (B)
Seat G16: Silicon carbide (Q1)

Standards and approvals

- EN 12756

Recommended applications

- Sugar industry
- Pulp and paper industry
- Water and waste water technology
- Dirty, abrasive and solids containing media
- Thick juice (70 ... 75 % sugar content)
- Raw sludge, sewage slurries
- Raw sludge pumps
- Thick juice pumps
- Conveying and bottling of dairy products

Item	Part no. to DIN 24250	Description
1.1	472/473	Seal face
1.2	485	Drive collar
1.3	412.2	O-Ring
1.4	412.1	O-Ring
1.5	477	Spring
1.6	904	Set screw
2	475	Seat (G16)
3	412.3	O-Ring

Product variants

HJ927GN
Items and description as HJ92N.
Seal face: Carbon graphite antimony impregnated (A), Carbon graphite resin impregnated (B)
Seat G46: Silicon carbide (Q12)
Installations length l_{11} (= l_3 + l_{39}) is longer than l_{1k}.

HJ97GN5
Items and description as HJ92N.
Seal face: Silicon carbide (Q12)
Seat G16: Silicon carbide (Q1)
Installations length l_{12} (= l_{13} + l_{19}) is shorter than l_{1k}.

HJ977GN
Items and description as HJ92N.
Seal face: Silicon carbide (Q12)
Seat G46: Silicon carbide (Q12)
Installation length l_{1k}
Operating range:
Temperature: t = –20 °C ... +180 °C (–4 °F ... +356 °F)
Sliding velocity: v_g = 10 m/s (33 ft/s)

HJ4 ...
Mechanical seals with product-protected multiple springs, for high pressure applications.
Pressure: p = max. 50 bar (725 PSI)
Shaft diameter: d_1 > 100 mm (3.94").
Smaller diameters and higher pressure on request.

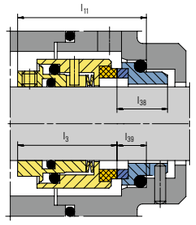

HJ927GN

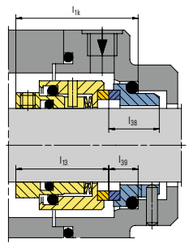

HJ977GN

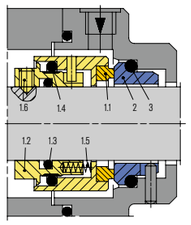

HJ4 ... (example)

Dimensions in mm

d_1	d_3	d_6	d_7	d_8	d_m	l_{1k}	l_3	l_5	l_6	l_7	l_{18}	l_{19}	l_{11}	l_{12}	l_{13}	l_{38}	l_{39}	f	m_x
18	32	27	33	3	26.0	37.5	30.5	2.0	5	9	15.0	7.0	39.5	35.5	28.5	17.0	9.0	3.0	M4
20	34	29	35	3	28.0	37.5	30.5	2.0	5	9	15.0	7.0	39.5	35.5	28.5	17.0	9.0	3.0	M4
22	36	31	37	3	30.0	37.5	30.5	2.0	5	9	15.0	7.0	39.5	35.5	28.5	17.0	9.0	3.0	M4
24	38	33	39	3	32.5	40.0	33.0	2.0	5	9	15.0	7.0	42.0	38.0	31.0	17.0	9.0	3.5	M5
25	39	34	40	3	33.5	40.0	33.0	2.0	5	9	15.0	7.0	42.0	38.0	31.0	17.0	9.0	3.5	M5
28	42	37	43	3	36.5	42.5	35.5	2.0	5	9	15.0	7.0	45.0	40.0	33.0	17.5	9.5	3.5	M5
30	44	39	45	3	38.5	42.5	35.5	2.0	5	9	15.0	7.0	45.0	40.0	33.0	17.5	9.5	3.5	M5
32	47	42	48	3	41.5	42.5	35.5	2.0	5	9	15.0	7.0	45.0	40.0	33.0	17.5	9.5	3.5	M5
33	47	42	48	3	41.5	42.5	35.5	2.0	5	9	15.0	7.0	45.0	40.0	33.0	17.5	9.5	3.5	M5
35	49	44	50	3	43.5	42.5	35.5	2.0	5	9	15.0	7.0	45.0	40.0	33.0	17.5	9.5	3.5	M5
38	54	49	56	4	47.5	45.0	37.0	2.0	6	9	16.0	8.0	47.5	42.5	34.5	18.5	10.5	4.0	M5
40	56	51	58	4	49.5	45.0	37.0	2.0	6	9	16.0	8.0	47.5	42.5	34.5	18.5	10.5	4.0	M5
43	59	54	61	4	52.5	45.0	37.0	2.0	6	9	16.0	8.0	47.5	42.5	34.5	18.5	10.5	4.0	M5
45	61	56	63	4	54.5	45.0	37.0	2.0	6	9	16.0	8.0	47.5	42.5	34.5	18.5	10.5	4.0	M5
48	64	59	66	4	57.5	45.0	37.0	2.0	6	9	16.0	8.0	47.5	42.5	34.5	18.5	10.5	4.0	M5
50	66	62	70	4	59.5	47.5	38.0	2.5	6	9	17.0	9.5	50.0	45.0	35.5	19.5	12.0	4.5	M6
53	69	65	73	4	62.5	47.5	38.0	2.5	6	9	17.0	9.5	50.0	45.0	35.5	19.5	12.0	4.5	M6
55	71	67	75	4	64.5	47.5	38.0	2.5	6	9	17.0	9.5	50.0	45.0	35.5	19.5	12.0	4.5	M6
58	78	70	78	4	68.5	52.5	42.0	2.5	6	9	18.0	10.5	55.0	50.0	39.5	20.5	13.0	4.5	M6
60	80	72	80	4	70.5	52.5	42.0	2.5	6	9	18.0	10.5	55.0	50.0	39.5	20.5	13.0	4.5	M6
63	83	75	83	4	73.5	52.5	42.0	2.5	6	9	18.0	10.5	55.0	50.0	39.5	20.5	13.0	4.5	M6
65	85	77	85	4	75.5	52.5	42.0	2.5	6	9	18.0	10.5	55.0	50.0	39.5	20.5	13.0	4.5	M6
68	88	81	90	4	78.5	52.5	41.5	2.5	7	9	18.5	11.0	55.0	50.0	39.0	21.0	13.5	4.5	M6
70	90	83	92	4	80.5	60.0	48.5	2.5	7	9	19.0	11.5	62.5	57.5	46.0	21.5	14.0	5.0	M6
75	99	88	97	4	89.0	60.0	48.5	2.5	7	9	19.0	11.5	62.5	57.5	46.0	21.5	14.0	5.5	M8
80	104	95	105	4	94.0	60.0	48.5	3.0	7	9	19.0	11.5	62.5	57.5	46.0	21.5	14.0	5.5	M8
85	109	100	110	4	99.0	60.0	48.5	3.0	7	9	19.0	11.5	62.5	57.5	46.0	21.5	14.0	5.5	M8
90	114	105	115	4	104.0	65.0	52.0	3.0	7	9	20.5	13.0	67.5	62.5	49.5	23.0	15.5	5.5	M8
95	119	110	120	4	109.0	65.0	52.0	3.0	7	9	20.5	13.0	67.5	62.5	49.5	23.0	15.5	5.5	M8
100	124	115	125	4	114.0	65.0	52.0	3.0	7	9	20.5	13.0	67.5	62.5	49.5	23.0	15.5	5.5	M8

H3B

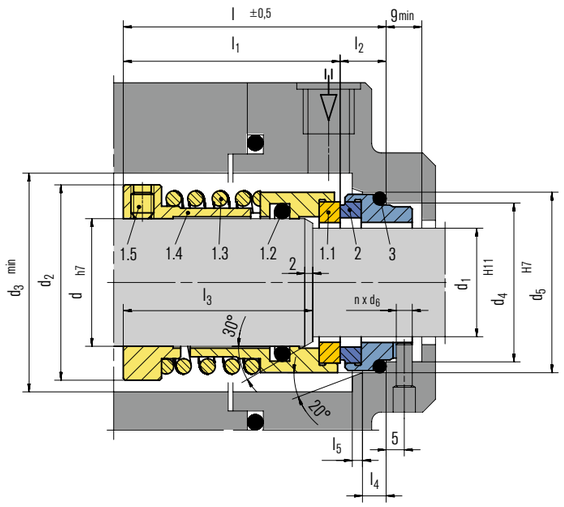

Features

- Single Seal
- Balanced
- Independent of direction of rotation

Advantages

- Excellent torque transmission due to clutch drive between seal head and drive collar.

Operating range (see note on page 1)

Pressure: p = 12 bar (174 PSI)
Temperature: t = –20 °C ... +160 °C (–4 °F ... +320 °F)
Sliding velocity: v_g = 20 m/s (66 ft/s)
Viscosity: ... 300 mPa·s
Solids content: ... 7 %

Materials

Seal face and seat: Silicon carbide (Q1),
Tungsten carbide (U7)
Metal parts: 1.4401 (G)
Secondary seals: FKM (V)

Standards and approvals

- ISO 3096

Recommended applications

- Process industry
- Oil and gas industry
- High viscous media (tar, heavy oils)
- Process pumps

Item	Description
1.1	Seal face
1.2	O-Ring
1.3	Spring
1.4	Drive collar
1.5	Set screw
2	Seat
3	O-Ring

Dimensions in mm

d	d_1	d_2	d_3	d_4	d_5	d_6	l	l_1	l_2	l_3	l_4	l_5
24	20	38	40	29	35	3	62	49	13	42	5	2
26	22	40	42	31	37	3	62	49	13	42	5	2
28	24	42	44	33	39	3	64	51	13	44	5	2
30	25	44	46	34	40	3	64	51	13	44	5	2
33	28	47	49	37	43	3	64	51	13	44	5	2
35	30	49	51	39	45	3	68	55	13	48	5	2
38	33	54	58	42	48	3	71	58	13	51	5	2
40	35	56	60	44	50	3	73	60	13	53	5	2
43	38	59	63	50	56	4	76	61	15	53	5	2
45	40	61	65	52	58	4	76	61	15	53	5	2
48	43	64	68	55	61	4	76	61	15	53	5	2
50	45	66	70	57	63	4	80	65	15	57	5	2
53	48	69	73	60	66	4	80	65	15	57	5	2
55	50	71	75	62	68	4	82	65	17	57	5	2
58	53	76	83	65	71	4	84	68	16	59	5	2
60	55	78	85	67	73	4	84	68	16	59	5	2
63	58	81	88	70	79	4	84	68	16	59	7	2.5
65	60	84	90	72	81	4	88	72	16	63	7	2.5
68	63	87	93	75	84	4	88	72	16	63	7	2.5
70	65	90	95	77	86	4	89	73	16	64	7	2.5
75	70	95	104	83	92	4	94	75	19	66	7	2.5
80	75	100	109	88	97	4	94	75	19	66	7	2.5
85	80	107	114	96	105	4	100	81	19	72	7	2.5
90	85	112	119	101	110	4	100	82	18	72	7	2.5
95	90	119	124	106	115	4	105	87	18	77	7	2.5
100	95	124	129	111	120	4	105	87	18	77	7	2.5
105	100	129	134	116	125	4	105	87	18	77	7	2.5

H12N

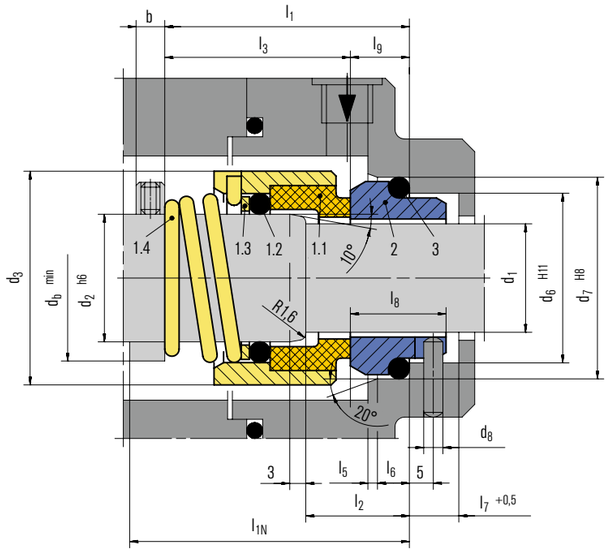

Features

- For Stepped shafts
- Single seal
- Balanced
- Dependent of direction of rotation
- Torque transmission via conical spring

Advantages

- High flexibility due to extended selection of materials
- Insensitive to low solids contents
- Short Installation length possible (G16)
- Economical balanced seal
- Seat cooling for hot water applications available (G115)
- No damage of the shaft by set screws

Operating range (see note on page 1)

Shaft diameter: d_1 = 10 ... 80 mm (0.4" ... 3.125")
Pressure: p_1 = 25 bar (363 PSI)
Temperature: t = –50 °C ... +220 °C (–58 °F ... +430 °F)
Sliding velocity: v_g = 15 m/s (50 ft/s)
Axial movement: ±1.0 mm

Materials

Seal face: Carbon graphite antimony impregnated (A)
Seat G9: Silicon carbide (Q1), Special cast CrMo steel (S)

Standards and approvals

- EN 12756

Recommended applications

- Water and waste water technology
- Chemical industry
- Low solids content media (H17GN)
- Hot water
- Chemical standard pumps
- Water and sewage pumps

Item	Part no. to DIN 24250	Description
1.1	472/473	Seal face
1.2	412.1	O-Ring
1.3	474	Thrust ring
1.4	478	Righthand spring
1.4	479	Lefthand spring
2	475	Type G9 stationary seat
3	412.2	O-Ring

Product variants

H12
Dimensions, items and descriptions as for H12N, but with seat G16.

Seal face: Carbon graphite antimony impregnated (A)
Seat G16: Silicon carbide (Q1), Special cast CrMo steel (S), Aluminium oxide (V)

H17GN
Dimensions, items and descriptions as for H12N, but with shrink-fitted seal face (Q12) (Item no. 1.1).
Temperature: t = –20 °C ... +180 °C (–4 °F ... +356 °F)

Seal face: Silicon carbide (Q12)
Seat G9: Silicon carbide (Q1, Q2), Carbon graphite antimony impregnated (A), Carbon graphite resin impregnated (B)

H17G
Dimensions, items and descriptions as for H12N, but with shrink-fitted seal face (Q12) and seat G16.
Temperature: t = –20 °C ... +180 °C (–4 °F ... +356 °F)

Seal face: Silicon carbide (Q12)
Seat G16: Silicon carbide (Q1)

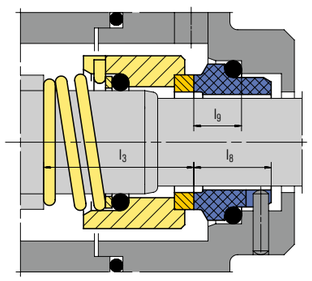

H17GN

Seat alternatives

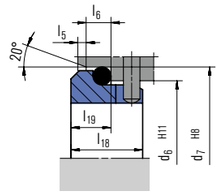

G16 (EN 12756 but l_{1k} and l_2 are shorter than specified)

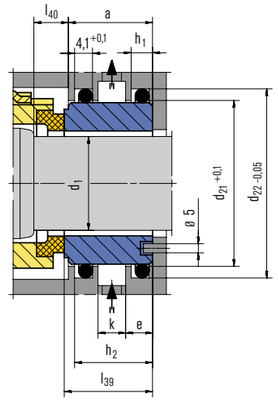

G115
Cooled seat especially for hot water applications. In this case, the dimensions of the H12N rotating unit are modified.
Seal designation: H127G115.
Please inquire.

Dimensions in mm

d_1	d_2	d_3	d_6	d_7	d_8	d_{21}	d_{22}	d_b	l_{1N}	l_1	l_2	l_3	l_5	l_6	l_7	l_8	l_9	l_{18}	l_{19}	l_{39}	l_{40}	a	b	e	h_1	h_2	k	b*)
10	14	24	17	21	3	–	–	18	50	35.5	18	25.5	1.5	4	8.5	17.5	10.0	–	–	–	–	–	5	–	–	–	–	8.0
12	16	26	19	23	3	–	–	21	50	36.5	18	26.5	1.5	4	8.5	17.5	10.0	–	–	–	–	–	5	–	–	–	–	8.0
14	18	31	21	25	3	–	–	23	55	39.5	18	29.5	1.5	4	8.5	17.5	10.0	–	–	–	–	–	6	–	–	–	–	8.0
16	20	34	23	27	3	–	–	26	55	41.0	18	31.0	1.5	4	8.5	17.5	10.0	–	–	–	–	–	6	–	–	–	–	8.0
18	22	36	27	33	3	–	–	28	55	44.0	20	32.5	2.0	5	9.0	19.5	11.5	15	7	–	–	–	6	–	–	–	–	8.0
20	24	38	29	35	3	–	–	30	60	44.0	20	32.5	2.0	5	9.0	19.5	11.5	15	7	–	–	–	6	–	–	–	–	8.0
22	26	40	31	37	3	–	–	31	60	44.0	20	32.5	2.0	5	9.0	19.5	11.5	15	7	–	–	–	6	–	–	–	–	8.0
24	28	42	33	39	3	–	–	35	60	44.0	20	32.5	2.0	5	9.0	19.5	11.5	15	7	–	–	–	6	–	–	–	–	8.0
25	30	44	34	40	3	–	–	37	60	45.0	20	33.5	2.0	5	9.0	19.5	11.5	15	7	–	–	–	6	–	–	–	–	8.0
28	33	47	37	43	3	44.65	50.57	40	65	47.0	20	35.5	2.0	5	9.0	19.5	11.5	15	7	24.0	8.5	24.0	6	8.0	6.6	22.6	9	8.0
30	35	49	39	45	3	47.83	53.75	43	65	47.0	20	35.5	2.0	5	9.0	19.5	11.5	15	7	24.5	9.0	24.0	6	8.0	6.6	22.6	9	8.0
32	38	54	42	48	3	47.83	53.75	45	65	51.0	20	39.5	2.0	5	9.0	19.5	11.5	15	7	24.5	9.0	24.0	6	8.0	6.6	22.6	9	7.5
33	38	54	42	48	3	47.83	53.75	45	65	51.0	20	39.5	2.0	5	9.0	19.5	11.5	15	7	24.5	9.0	24.0	6	8.0	6.6	22.6	9	7.5
35	40	56	44	50	3	51.00	56.92	49	65	55.0	20	43.5	2.0	5	9.0	19.5	11.5	15	7	24.5	9.0	24.0	6	8.0	6.6	22.6	9	8.0
38	43	59	49	56	4	54.18	60.10	52	75	60.0	23	46.0	2.0	6	9.0	22.0	14.0	16	8	26.0	11.0	24.0	6	8.0	6.6	22.6	9	7.5
40	45	61	51	58	4	60.53	66.45	55	75	62.0	23	48.0	2.0	6	9.0	22.0	14.0	16	8	26.0	11.0	24.0	6	8.0	6.6	22.6	9	8.0
43	48	64	54	61	4	63.70	69.62	58	75	65.0	23	51.0	2.0	6	9.0	22.0	14.0	16	8	26.0	11.0	24.0	6	8.0	6.6	22.6	9	8.0
45	50	66	56	63	4	63.70	69.62	61	75	69.0	23	55.0	2.0	6	9.0	22.0	14.0	16	8	26.0	11.0	24.0	6	8.0	6.6	22.6	9	(8)
48	53	69	59	66	4	66.88	72.80	64	85	69.0	23	55.0	2.0	6	9.0	22.0	14.0	16	8	26.0	11.0	24.0	8	8.0	6.6	22.6	9	8.0
50	55	71	62	70	4	70.05	75.97	66	85	73.0	25	58.0	2.5	6	9.0	23.0	15.0	17	9.5	26.5	12.5	24.0	8	8.0	6.6	22.6	9	8.0
53	58	78	65	73	4	76.40	82.32	69	85	75.0	25	60.0	2.5	6	9.0	23.0	15.0	17	9.5	26.5	12.5	24.0	8	8.0	6.6	22.6	9	8.0
55	60	79	67	75	4	76.40	82.32	71	85	75.0	25	60.0	2.5	6	9.0	23.0	15.0	17	9.5	28.5	12.5	26.0	8	8.0	6.6	24.6	11	8.0
58	63	83	70	78	4	79.58	85.50	74	85	75.0	25	60.0	2.5	6	9.0	23.0	15.0	18	10.5	28.5	12.5	26.0	8	8.0	6.6	24.6	11	8.0
60	65	85	72	80	4	82.75	88.67	77	95	75.0	25	60.0	2.5	6	9.0	23.0	15.0	18	10.5	28.5	12.5	26.0	8	8.0	6.6	24.6	11	8.0
63	68	88	75	83	4	85.93	91.85	80	95	75.0	25	60.0	2.5	6	9.0	23.0	15.0	18	10.5	28.5	12.5	26.0	8	8.0	6.6	24.6	11	8.0
65	70	90	77	85	4	85.93	91.85	83	95	76.0	25	61.0	2.5	6	9.0	23.0	15.0	18	10.5	28.5	12.5	26.0	8	8.0	6.6	24.6	11	10.0
70	75	98	83	92	4	89.10	95.02	88	95	81.0	28	63.0	2.5	7	9.0	26.0	18.0	19	11.5	30.5	14.5	26.0	8	8.0	6.6	24.6	11	10.0
75	80	103	88	97	4	98.63	104.55	93	105	86.0	28	68.0	2.5	7	9.0	26.0	18.0	19	11.5	30.5	14.5	26.0	10	8.0	6.6	24.6	11	10.0
80	85	109	95	105	4	101.80	107.72	98	105	86.0	28	68.0	3.0	7	9.0	26.2	18.2	19	11.5	30.2	14.0	26.0	10	8.0	6.6	24.6	11	10.0

* l_{1N} acc. to EN 12756 is exceeded

H10/H8

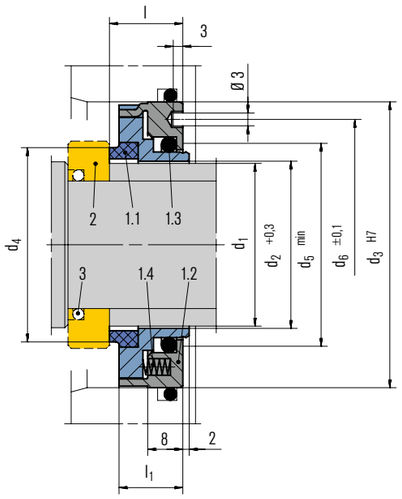

Features

- Single seal
- Balanced
- Independent of direction of rotation
- Stationary multiple springs

Advantages

- Insensitive to solids in the medium
- Very short axial installation length (analog lip seals) combined with high pressurre capability
- No damage of the shaft by dynamically loaded O-Ring
- Due to the stationary design insensitive to shaft misalignements
- Compact ready-to-install unit

Operating range (see note on page 1)

Shaft Diameter: d_1 = 15 ... 100 mm (0.6" ... 3.9")
Pressure: p_1 = 25 bar (363 PSI)
Temperature: t = –40 °C ... +180 °C (–40 °F ... +356 °F)
Sliding velocity: v_g = 50 m/s (164 ft/s)

Materials

Seal face: Carbon graphite antimony impregnated (A), Carbon graphite resin impregnated (B)

Recommended applications

- Process industry
- Lube oils
- Roller seal
- Bearing seal
- All seal chambers with a very short axial installation length

Item	Part no. to DIN 24250	Description
1.1	472	Seal face
	473	Seal face housing
1.2	485	Drive collar
1.3		O-Ring
1.4	477	Spring
2	475	Rotating seat*
3	412.2	O-Ring

* The stationary seat design is chosen according to the specific requirements and conditions of operation.

Product variant

H8

Dimensions, items and decription as H10. Drive collars and housings for item 1.2 are made of deep-drawn stainless steel sheet.

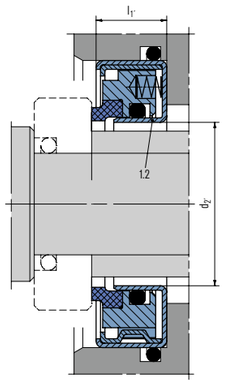

Dimensions in mm

d_1	d_2	d_2'	d_3	d_4	d_5	d_6	l	l_1	l_1'
15	16	17	42	22.6	21	34	17	15.0	16
18	19	–	45	25.6	24	37	17	15.0	–
20	21	22	48	27.6	26	40	17	15.0	16
22	23	24	50	29.6	28	42	17	15.0	16
25	26	27	52	32.8	31	44	17	15.0	16
28	29	–	55	35.8	34	47	17	15.0	–
30	31	32	58	37.8	36	50	17	15.0	16
32	33	34	60	39.8	38	52	17	15.0	16
35	36	37	62	42.8	41	54	17	15.0	16
38	39	40	65	45.9	44	57	17	15.0	16
40	41	42	68	47.9	46	60	17	15.0	16
42	43	44	72	49.9	48	64	17	15.0	16
45	46	47	75	52.9	51	67	17	15.0	16
48	49	–	80	55.9	54	72	17	15.0	–
50	51	52	80	58.2	56	72	17	15.0	16
52	53	–	82	60.2	58	74	17	15.0	–
55	56	57	85	63.2	61	77	17	15.0	16
58	59	–	90	66.7	64	82	17	15.0	–
60	61	62	90	68.7	66	82	17	15.0	16
65	66	67	95	73.7	71	87	19	16.5	18
68	69	70	100	76.7	74	92	19	16.5	18
70	71	72	100	78.7	76	92	19	16.5	18
75	76	77	108	83.7	81	100	19	16.5	18
80	81	82	112	88.7	86	104	19	16.5	18
85	86	87	118	93.7	91	110	19	16.5	18
90	91	92	122	99.5	96	114	19	16.5	18
95	96	97	128	104.5	101	120	19	16.5	18
100	101	102	132	109.5	106	124	19	16.5	18

Axial tolerances: l ±0.5 H10, l ±0.2 H8

Cartex® Single seals

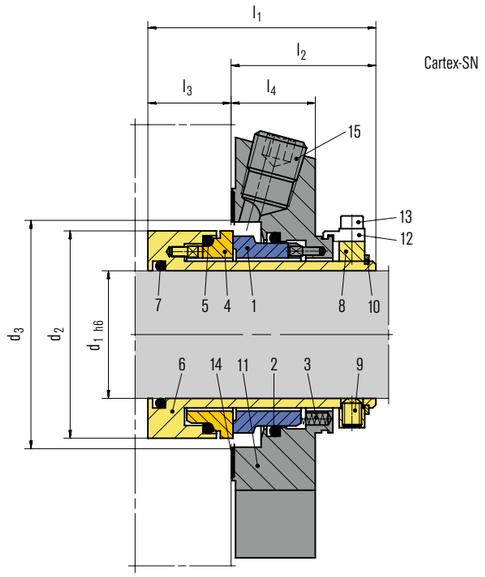

Features

- Single seal
- Cartridge
- Balanced
- Independent of direction of rotation
- Single seals without connections (-SNO), with flush (-SN) and with quench combined with lip seal (-QN) or throttle ring (-TN)
- Additional variants available for ANSI pumps (e. g.-ABPN) and eccentric screw pumps (-Vario)

Advantages

- Ideal seal for standardizations
- Universal applicable for packings conversions, retrofits or original equipment
- No dimensional modification of the seal chamber (centrifugal pumps) necessary, small radial installation height
- No damage of the shaft by dynamically loaded O-Ring
- Extended service life
- Installation faults are avoided, cost-effective
- No damage caused by dirt entered during assembly
- Straightforward and easy installation due to pre-assembled unit (reduced down-times)
- Individual adaptation to pump design possible
- Customer specific versions available

Operating range (see note on page 1)

Cartex-SN, -SNO, -QN, -TN, -Vario

Shaft diameter: d_1 = 25 ... 100 mm (1.000" ... 4.000")
Other sizes on request
Temperature: t = –40 °C ... +220 °C (–40 °F ... +428 °F)
(Check O-Ring resistance)

Sliding face material combination BQ1
Pressure: p_1 = 25 bar (363 PSI)
Sliding velocity: v_g = 16 m/s (52 ft/s)

Sliding face material combination Q1Q1 or U2Q1
Pressure: p_1 = 12 bar (174 PSI)
Sliding velocity: v_g = 10 m/s (33 ft/s)

Axial movement: ±1.0 mm, d_1 ≥ 75 mm ±1.5 mm

Item	Description
1	Seal face
2, 5, 7	O-Ring
3	Spring
4	Seat
6	Shaft sleeve
8	Drive collar
9	Set screw
10	Snap ring
11	Cover
12	Assembly fixture
13	Screw
14	Gasket
15	Screw plug
16	Lip seal (-QN), throttle ring (-TN)

Materials

Seal face: Silicon carbide (Q1), Carbon graphite resin impregnated (B), Tungsten carbide (U2)
Seat: Silicon carbide (Q1)
Secondary seals: FKM (V), EPDM (E), FFKM (K), Perflourocarbon rubber/PTFE (U1)
Springs: Hastelloy® C-4 (M)
Metal parts: CrNiMo steel (G), CrNiMo cast steel (G)

Recommended applications

- Process industry
- Water and waste water technology
- Chemical industry
- Petrochemical industry
- Pharmaceutical industry
- Food and beverage industry
- Universally applicable
- Centrifugal pumps
- Eccentric screw pumps
- Process pumps

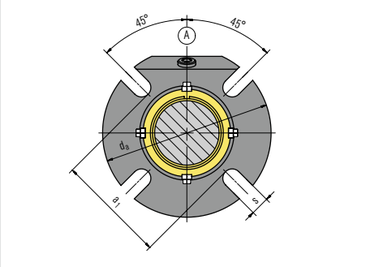

Machined cover version

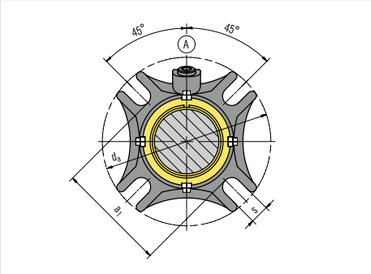

Cast cover version

Product variants

Cartex-SNO
Single seal without connections, for dead-end operation.

Cartex-TN
Single seal for operation with unpressurized quench. Same as Cartex-SN but with throttle ring (item 16). The cover has auxiliary connections for flushing and quench.
Throttle ring: PTFE carbon-graphite reinforced.

Cartex-QN
Single seal for operation with unpressurized quench. Same as "-SN" version but with outboard lip seal (item 16). The cover has auxiliary connections for flushing and quench.
Lip seal: NBR (P), PTFE carbon reinforced (T3)

Cartex-Vario
Cartridge seals with modified cover for eccentric screw pumps.
For e. g. Seepex BN,
Netzsch NM ... S, NM ... B, NE (P),
Allweiler AE, AEB, AED,
Robbins & Myers/Moyno 2000 CC and Mono E-Range.
Please inquire.

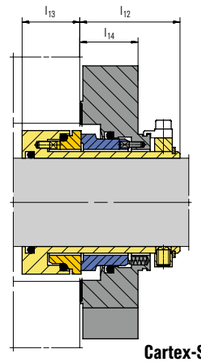

Cartex-SNO

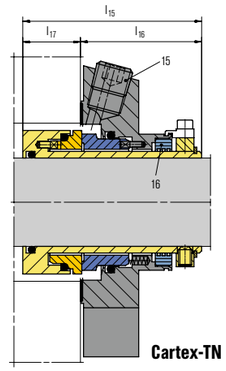

Cartex-TN

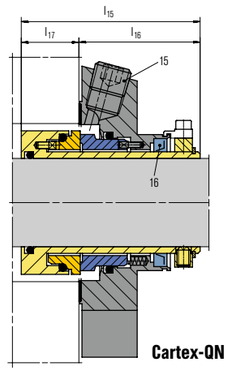

Cartex-QN

Cartex-Vario

Dimensions in mm

d_1	d_2	$d_{3min.}$	$d_{3max.}$	l_1	l_2	l_3	l_4	l_{12}	l_{13}	l_{14}	l_{15}	l_{16}	l_{17}	a_1	d_a	s
25	43.0	44.0	51.5	67	42.4	24.6	25.4	35.0	32.0	17.5	79.5	53.4	26.1	62	105	13.2
28	46.0	47.0	52.0	67	42.4	24.6	25.4	35.0	32.0	17.5	79.5	53.4	26.1	62	105	13.2
30	48.0	49.0	56.0	67	42.4	24.6	25.4	35.0	32.0	17.5	79.5	53.4	26.1	65	105	13.2
32	49.8	51.0	57.0	67	42.4	24.6	25.4	35.0	32.0	17.5	79.5	53.4	26.1	67	110	13.2
33	49.8	51.0	57.0	67	42.4	24.6	25.4	35.0	32.0	17.5	79.5	53.4	26.1	67	110	13.2
35	53.0	54.0	61.5	67	42.4	24.6	25.4	35.0	32.0	17.5	79.5	53.4	26.1	70	113	13.2
38	56.0	57.0	66.0	67	42.4	24.6	25.4	35.0	32.0	17.5	79.5	53.4	26.1	75	123	13.2
40	58.0	59.0	68.0	67	42.4	24.6	25.4	35.0	32.0	17.5	79.5	53.4	26.1	75	123	14.2
42	60.5	61.5	69.5	67	42.4	24.6	25.4	35.0	32.0	17.5	79.5	53.4	26.1	80	133	14.2
43	60.5	61.5	70.5	67	42.4	24.6	25.4	35.0	32.0	17.5	79.5	53.4	26.1	80	133	14.2
45	62.5	64.0	73.0	67	42.4	24.6	25.4	35.0	32.0	17.5	79.5	53.4	26.1	81	138	14.2
48	65.6	67.0	75.0	67	42.4	24.6	25.4	35.0	32.0	17.5	79.5	53.4	26.1	84	138	14.2
50	68.0	69.0	78.0	67	42.4	24.6	25.4	35.0	32.0	17.5	79.5	53.4	26.1	87	148	14.2
53	72.0	73.0	87.0	67	42.4	24.6	25.4	35.0	32.0	17.5	79.5	53.4	26.1	97	148	18.0
55	73.0	74.0	83.0	67	42.4	24.6	25.4	35.0	32.0	17.5	79.5	53.4	26.1	90	148	18.0
60	78.0	79.0	91.0	67	42.4	24.6	25.4	35.0	32.0	17.5	79.5	53.4	26.1	102	157	18.0
65	84.8	85.7	98.5	67	42.4	24.6	25.4	35.0	32.0	17.5	79.5	53.4	26.1	109	163	18.0
70	93.0	95.0	108.0	67	42.4	24.6	25.4	35.0	32.0	17.5	79.5	53.4	26.1	118	178	18.0
75	100.0	101.6	118.0	84	57.4	26.6	28.0	46.1	37.9	22.0	98.0	63.9	34.1	129	190	18.0
80	106.4	108.0	124.0	84	57.4	26.6	28.0	46.1	37.9	22.0	98.0	63.9	34.1	135	195	18.0
85	109.5	111.1	128.0	84	57.4	26.6	28.0	46.1	37.9	22.0	98.0	63.9	34.1	139	198	22.0
90	115.9	117.5	135.0	84	57.4	26.6	28.0	46.1	37.9	22.0	98.0	63.9	34.1	145	205	22.0
95	119.1	120.7	138.0	84	57.4	26.6	28.0	46.1	37.9	22.0	98.0	63.9	34.1	148	208	22.0
100	125.4	127.0	144.0	84	57.4	26.6	28.0	46.1	37.9	22.0	98.0	63.9	34.1	154	218	22.0

Dimensions in inch

d_1	d_2	$d_{3min.}$	$d_{3max.}$	l_1	l_2	l_3	l_4	l_{12}	l_{13}	l_{14}	l_{15}	l_{16}	l_{17}	a_1	d_a	s
1.000	1.693	1.750	2.008	2.640	1.669	0.969	1.000	1.378	1.260	0.689	3.130	2.102	1.028	2.441	4.134	0.520
1.125	1.811	1.850	2.047	2.640	1.669	0.969	1.000	1.378	1.260	0.689	3.130	2.102	1.028	2.441	4.134	0.520
1.250	1.969	2.008	2.244	2.640	1.669	0.969	1.000	1.378	1.260	0.689	3.130	2.102	1.028	2.640	4.252	0.520
1.375	2.087	2.126	2.421	2.640	1.669	0.969	1.000	1.378	1.260	0.689	3.130	2.102	1.028	2.756	4.449	0.520
1.500	2.205	2.244	2.589	2.640	1.669	0.969	1.000	1.378	1.260	0.689	3.130	2.102	1.028	2.953	4.843	0.520
1.625	2.344	2.375	2.700	2.640	1.669	0.969	1.000	1.378	1.260	0.689	3.130	2.102	1.028	3.031	4.843	0.559
1.750	2.461	2.520	2.874	2.640	1.669	0.969	1.000	1.378	1.260	0.689	3.130	2.102	1.028	3.189	5.433	0.559
1.875	2.583	2.638	2.953	2.640	1.669	0.969	1.000	1.378	1.260	0.689	3.130	2.102	1.028	3.307	5.433	0.559
2.000	2.677	2.717	3.071	2.640	1.669	0.969	1.000	1.378	1.260	0.689	3.130	2.102	1.028	3.425	5.827	0.559
2.125	2.835	2.875	3.425	2.640	1.669	0.969	1.000	1.378	1.260	0.689	3.130	2.102	1.028	3.819	5.827	0.709
2.250	2.961	3.000	3.560	2.640	1.669	0.969	1.000	1.378	1.260	0.689	3.130	2.102	1.028	3.940	6.181	0.709
2.375	3.071	3.110	3.583	2.640	1.669	0.969	1.000	1.378	1.260	0.689	3.130	2.102	1.028	4.016	6.181	0.709
2.500	3.213	3.250	3.800	2.640	1.669	0.969	1.000	1.378	1.260	0.689	3.130	2.102	1.028	4.173	6.417	0.709
2.625	3.339	3.338	3.937	2.640	1.669	0.969	1.000	1.378	1.260	0.689	3.130	2.102	1.028	4.291	6.417	0.709
2.750	3.661	3.740	4.252	2.640	1.669	0.969	1.000	1.378	1.260	0.689	3.130	2.102	1.028	4.646	7.008	0.709
2.875	3.937	4.000	4.646	3.307	2.260	1.047	1.000	1.815	1.492	0.866	–	–	–	5.079	7.480	0.709
3.000	3.937	4.000	4.646	3.307	2.260	1.047	1.100	1.815	1.492	0.866	3.858	2.516	1.343	5.079	7.480	0.709
3.125	4.189	4.252	4.882	3.307	2.260	1.047	1.100	1.815	1.492	0.866	3.858	2.516	1.343	5.315	7.677	0.709
3.250	4.189	4.252	4.882	3.307	2.260	1.047	1.100	1.815	1.492	0.866	–	–	–	5.315	7.677	0.709
3.375	4.311	4.374	5.039	3.307	2.260	1.047	1.100	1.815	1.492	0.866	–	–	–	5.472	7.795	0.866
3.500	4.437	4.500	5.157	3.307	2.260	1.047	1.100	1.815	1.492	0.866	–	–	–	5.591	7.795	0.866
3.625	4.563	4.626	5.315	3.307	2.260	1.047	1.100	1.815	1.492	0.866	–	–	–	5.709	8.071	0.866
3.750	4.689	4.752	5.433	3.307	2.260	1.047	1.100	1.815	1.492	0.866	3.858	2.516	1.343	5.827	8.189	0.866
4.000	4.937	5.000	5.669	3.307	2.260	1.047	1.100	1.815	1.492	0.866	–	–	–	6.063	8.583	0.866

Cartex® Dual seals

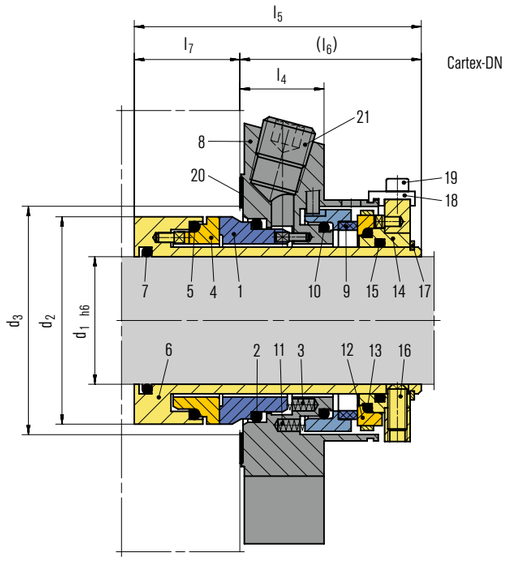

Features

- Dual seal
- Cartridge
- Balanced
- Independent of direction of rotation
- Double pressure balanced
- Integrated pumping device
- Variants available: for eccentric screw pumps (-Vario) and gas-lubricated version (-GSDN)

Advantages

- Ideal seal for standardizations
- Universal applicable for packings conversions, retrofits or OEM
- No dimensional modification of the seal chamber (centrifugal pumps) necessary, small radial installation height
- No damage of the shaft by dynamically loaded O-Ring
- Extended service life
- Installation faults are avoided, cost-effective
- No damage caused by dirt entered during assembly
- Straightforward and easy installation due to pre-assembled unit (reduced down-times)
- Individual adaptation to pump design possible
- Customer specific versions available

Operating range (see note on page 1)

Shaft diameter: d_1 = 25 ... 100 mm (1.000" ... 4.000")
Other sizes on request
Temperature: t = –40 °C ... +220 °C (–40 °F ... +428 °F)
(Check O-Ring resistance)

Sliding face material combination BQ1
Pressure: p_1 = 25 bar (363 PSI)
Sliding velocity: v_g = 16 m/s (52 ft/s)

Sliding face material combination Q1Q1 or U2Q1
Pressure: p_1 = 20 bar (290 PSI)
Sliding velocity: v_g = 10 m/s (33 ft/s)

Barrier fluid circulation system:
p_{3max} = 25 bar (363 PSI)
p_{3max} = 7 bar (102 PSI) for barrier media with poor lubricating properties
Δp (p_3 – p_1)ideal = 2 ... 3 bar (29 ... 44 PSI)

Pump startup:
Δp (p_3 – p_1)max = 25 bar (363 PSI) allowed

Recommended supply medium: max. ISO VG 5
Axial movement: ±1.0 mm, d_1 ≥ 75 mm ±1.5 mm

Item	Description
1	Seal face
2, 5, 7, 10, 13, 15	O-Ring
3	Spring
4	Seat
6	Shaft sleeve
8	Cover
9	Seal face
11	Spring
12	Seat
14	Drive collar
16	Set screw
17	Snap ring
18	Assembly fixture (remove after installation)
19	Hex socket head screw
20	Gasket
21	Screw plug
22	Gasket

Materials

Seal face: Silicon carbide (Q1), Carbon graphite resin impregnated (B), Tungsten carbide (U2)
Seat: Silicon carbide (Q1)
Secondary seals: FKM (V), EPDM (E), FFKM (K), Perfluorocarbon rubber/PTFE (U1)
Springs: Hastelloy® (M)
Metal parts: CrNiMo steel (G), CrNiMo cast steel (G)

Recommended seal supply

The EagleBurgmann QFT1000 buffer system and QFT2000 vessels are suitable for Cartex®-DN in back-to-back arrangement. The EagleBurgmann TS1016 and TS2000 thermosiphon systems support double and back-to-back seal configurations.

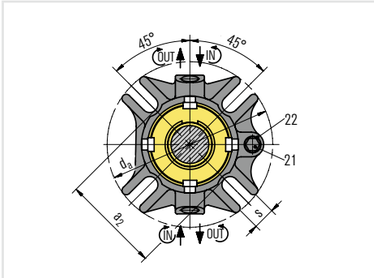

Cast cover version

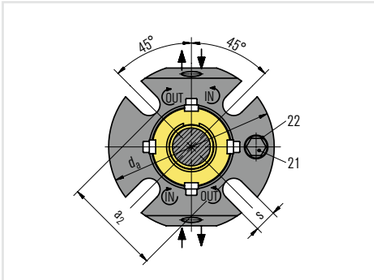

Machined cover version

Recommended applications

- Water and waste water technology
- Chemical industry
- Petrochemical industry
- Pharmaceutical industry
- Food and beverage industry
- Centrifugal pumps
- Eccentric screw pumps
- Universally applicable

Dimensions in mm

d_1	d_2	$d_{3min.}$	$d_{3max.}$	l_4	l_5	l_6	l_7	a_2	d_a	s
25	43.0	44.0	51.5	25.4	86.5	53.4	33.1	62	105	13.2
28	46.0	47.0	52.0	25.4	86.5	53.4	33.1	61	105	13.2
30	48.0	49.0	56.0	25.4	86.5	53.4	33.1	67	105	13.2
32	49.8	51.0	57.0	25.4	86.5	53.4	33.1	70	110	13.2
33	49.8	51.0	57.0	25.4	86.5	53.4	33.1	70	110	13.2
35	53.0	54.0	61.5	25.4	86.5	53.4	33.1	72	113	13.2
38	56.0	57.0	66.0	25.4	86.5	53.4	33.1	75	123	13.2
40	58.0	59.0	68.0	25.4	86.5	53.4	33.1	77	123	14.2
42	60.5	61.5	69.5	25.4	86.5	53.4	33.1	80	133	14.2
43	60.5	61.5	70.5	25.4	86.5	53.4	33.1	80	133	14.2
45	62.5	64.0	73.0	25.4	86.5	53.4	33.1	82	138	14.2
48	65.6	67.0	75.0	25.4	86.5	53.4	33.1	85	138	14.2
50	68.0	69.0	78.0	25.4	86.5	53.4	33.1	87	148	14.2
53	72.0	73.0	87.0	25.4	86.5	53.4	33.1	97	148	18.0
55	73.0	74.0	83.0	25.4	86.5	53.4	33.1	92	148	18.0
60	78.0	79.0	91.0	25.4	86.5	53.4	33.1	102	157	18.0
65	84.8	85.7	98.5	25.4	86.5	53.4	33.1	109	163	18.0
70	93.0	95.0	108.0	25.4	86.5	53.4	33.1	118	178	18.0
75	100.0	101.6	118.0	28.0	108.0	63.9	44.1	129	190	18.0
80	106.4	108.0	124.0	28.0	108.0	63.9	44.1	135	195	18.0
85	109.5	111.1	128.0	28.0	108.0	63.9	44.1	139	198	22.0
90	115.9	117.5	135.0	28.0	108.0	63.9	44.1	145	205	22.0
95	119.1	120.7	138.0	28.0	108.0	63.9	44.1	148	208	22.0
100	125.4	127.0	144.0	28.0	108.0	63.9	44.1	154	218	22.0

Dimensions in inch

d_1	d_2	$d_{3min.}$	$d_{3max.}$	l_4	l_5	l_6	l_7	a_2	d_a	s
1.000	1.693	1.732	2.008	1.000	3.400	2.102	1.303	2.440	4.134	0.520
1.125	1.811	1.875	2.050	1.000	3.400	2.102	1.303	2.402	4.134	0.520
1.250	1.961	2.008	2.244	1.000	3.400	2.102	1.303	2.760	4.330	0.520
1.375	2.087	2.126	2.421	1.000	3.400	2.102	1.303	2.840	4.449	0.520
1.500	2.205	2.244	2.598	1.000	3.400	2.102	1.303	2.950	4.843	0.520
1.625	2.343	2.375	2.700	1.000	3.400	2.102	1.303	3.090	4.842	0.559
1.750	2.461	2.520	2.874	1.000	3.400	2.102	1.303	3.230	5.433	0.559
1.875	2.582	2.638	2.953	1.000	3.400	2.102	1.303	3.350	5.433	0.559
2.000	2.677	2.717	3.071	1.000	3.400	2.102	1.303	3.430	5.827	0.559
2.125	2.835	2.874	3.425	1.000	3.400	2.102	1.303	3.819	5.827	0.709
2.250	2.961	3.000	3.560	1.000	3.400	2.102	1.303	3.940	6.181	0.709
2.375	3.071	3.125	3.583	1.000	3.400	2.102	1.303	4.020	6.181	0.709
2.500	3.213	3.300	3.800	1.000	3.400	2.102	1.303	4.180	6.417	0.709
2.625	3.339	3.374	3.937	1.000	3.400	2.102	1.303	4.303	6.417	0.709
2.750	3.661	3.740	4.252	1.000	3.400	2.102	1.303	4.660	7.008	0.709
2.875	3.937	4.000	4.646	1.000	4.250	2.516	1.736	5.079	7.480	0.709
3.000	3.937	4.000	4.646	1.102	4.250	2.516	1.736	5.079	7.480	0.709
3.125	4.189	4.252	4.882	1.102	4.250	2.516	1.736	5.315	7.677	0.709
3.250	4.189	4.252	4.882	1.102	4.250	2.516	1.736	5.315	7.677	0.709
3.375	4.311	4.375	5.039	1.102	4.250	2.516	1.736	5.472	7.795	0.866
3.500	4.437	4.500	5.157	1.102	4.250	2.516	1.736	5.591	7.795	0.866
3.625	4.563	4.625	5.315	1.102	4.250	2.516	1.736	5.709	8.071	0.866
3.750	4.689	4.752	5.433	1.102	4.250	2.516	1.736	5.827	8.189	0.866
4.000	4.937	5.000	5.669	1.102	4.250	2.516	1.736	6.063	8.583	0.866

Cartex® ANSI Single seals

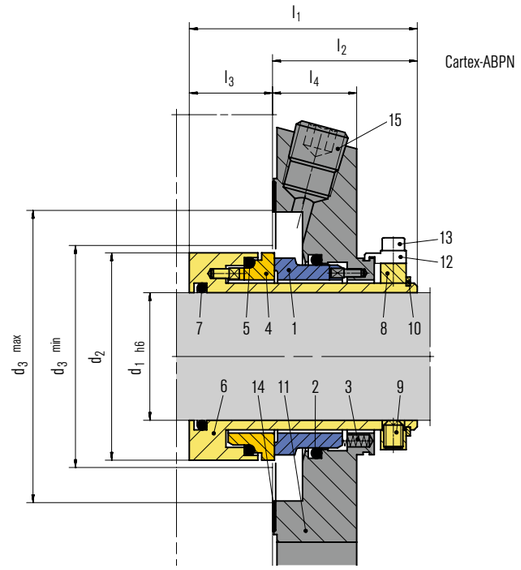

Features

- Single seal
- Available for standard (Cartex-ASPN) and big bore (Cartex-ABPN) seal chambers
- Cartridge
- Balanced
- Independent of direction of rotation
- Single seals with flush (-ASPN, -ABPN) and with quench combined with lip seal (-ASQN, -ABQN) or throttle ring (-ASTN, -ABTN)

Advantages

- Ideal for use in ANSI process pumps
- Universal applicable for packings conversions, retrofits or original equipment
- Seal for standardizations
- No dimensional modification of the seal chamber necessary, small radial installation height
- No damage of the shaft by dynamically loaded O-Ring
- Extended service life
- Installation faults are avoided, cost-effective
- No damage caused by dirt entered during assembly
- Straightforward and easy installation due to preassembled unit (reduced down-times)

Operating range (see note on page 1)

Cartex-ASPN, - ABPN, -ASTN, -ABTN, -ASQN, -ABQN

Shaft diameter: d_1 = 1.000" ... 3.750"
Other sizes on request
Temperature: t = –40 °C ... +220 °C (–40 °F ... +428 °F)
(Check O-Ring resistance)

Sliding face material combination BQ1
Pressure: p_1 = 25 bar (363 PSI)
Sliding velocity: v_g = 16 m/s (52 ft/s)

Sliding face material combination Q1Q1 or U2Q1
Pressure: p_1 = 12 bar (174 PSI)
Sliding velocity: v_g = 10 m/s (33 ft/s)

Axial movement: ±1.0 mm, d_1 ≥ 75 mm ±1.5 mm

Item	Description
1	Seal face
2, 5, 7	O-Ring
3	Spring
4	Seat
6	Shaft sleeve
8	Drive collar
9	Set screw
10	Snap ring
11	Cover
12	Assembly fixture
13	Screw
14	Gasket
15	Screw plug
16	Lip seal (-QN), throttle ring (-TN)

Materials

Seal face: Silicon carbide (Q1), Carbon graphite resin impregnated (B), Tungsten carbide (U2)
Seat: Silicon carbide (Q1)
Secondary seals: FKM (V), EPDM (E), FFKM (K), Perflourocarbon rubber/PTFE (U1)
Springs: Hastelloy® C-4 (M)
Metal parts: CrNiMo steel (G)

Standards and approvals

- ANSI

Recommended applications

- Water and waste water technology
- Chemical and industry
- Petrochemical industry
- Pharmaceutical industry
- Food and beverage industry
- Universally applicable
- ANSI process pumps

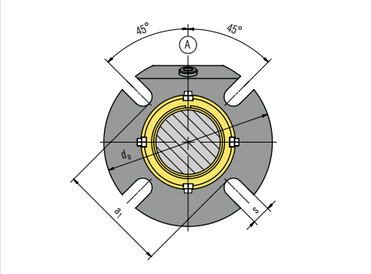

Machined cover version

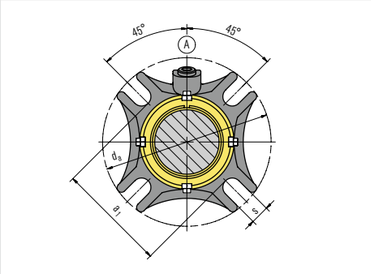

Cast cover version

Product variants

Cartex-ASTN and -ABTN
Single seal for operation with unpressurized quench for standard (S) and big bore (B) seal chambers. Same as Cartex-ASPN and -ABPN but with throttle ring (item 16) at the atmospheric side. The cover has auxiliary connections for flushing and quench.
Throttle ring: PTFE carbon-graphite reinforced (T12)

Cartex-ASQN and -ABQN
Single seal for operation with unpressurized quench for standard (S) and big bore (B) seal chambers. Same as Cartex-ASPN and -ABPN version but with lip seal (item 16) at the atmospheric side. The cover has auxiliary connections for flushing and quench.
Lip seal: NBR (P), PTFE carbon reinforced (T3)

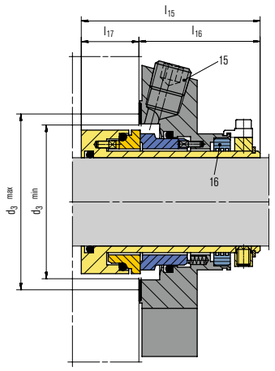

Cartex-ASTN

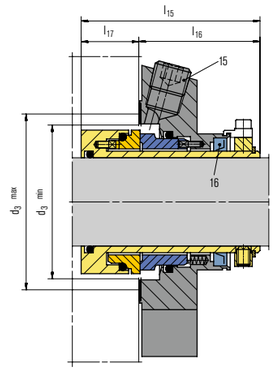

Cartex-ASQN

Big bore – Dimensions in inch

d_1	d_2	$d_{3min.}$	$d_{3max.}$	l_1	l_2	l_3	l_4	l_{15}	l_{16}	l_{17}	a_1	d_a	s	Connection
1.000	–	–	–	–	–	–	–	–	–	–	–	–	–	–
1.125	1.713	1.752	2.795	2.638	1.669	0.969	1.000	2.937	1.909	1.028	3.311	4.500	0.437	1/4 NPT
1.250	–	–	–	–	–	–	–	–	–	–	–	–	–	–
1.375	1.960	2.000	3.189	2.638	1.669	0.969	1.000	2.947	1.919	1.028	3.543	5.118	0.437	1/4 NPT
1.500	–	–	–	–	–	–	–	–	–	–	–	–	–	–
1.625	–	–	–	–	–	–	–	–	–	–	–	–	–	–
1.750	2.461	2.500	4.055	2.638	1.669	0.969	1.000	3.012	1.984	1.028	4.567	6.496	0.559	3/8 NPT
1.875	2.583	2.661	3.937	2.638	1.669	0.969	1.000	3.071	2.059	1.012	4.409	5.984	0.551	3/8 NPT
2.000	2.677	2.756	4.567	2.638	1.929	0.709	1.260	3.130	2.102	1.028	4.882	6.260	0.551	3/8 NPT
2.125	2.834	2.913	4.528	2.638	1.669	0.969	1.000	3.012	1.984	1.028	5.276	6.890	0.709	3/8 NPT
2.250	2.960	3.093	4.409	2.638	1.945	0.693	1.276	3.130	2.120	1.028	4.685	6.417	0.709	3/8 NPT
2.500	3.212	3.299	5.276	2.638	1.919	0.719	1.250	3.130	2.120	1.028	5.512	7.795	0.709	3/8 NPT
2.625	3.338	3.17	5.118	2.638	1.919	0.719	1.250	3.130	2.120	1.028	5.354	6.890	0.709	3/8 NPT
2.750	3.660	3.740	5.236	2.638	1.945	0.693	1.276	3.130	2.120	1.028	5.512	7.480	0.630	3/8 NPT
3.000	3.937	4.016	5.512	3.307	2.276	1.031	1.276	3.858	2.516	1.343	5.906	8.228	0.650	3/8 NPT
3.250	–	–	–	–	–	–	–	–	–	–	–	–	–	–

Standard bore – Dimensions in inch

d_1	d_2	$d_{3min.}$	$d_{3max.}$	l_1	l_2	l_3	l_4	l_{15}	l_{16}	l_{17}	a_1	d_a	s	Connection
1.000	1.693	1.732	2.205	2.638	1.669	0.969	1.000	2.937	1.909	1.028	2.756	3.937	0.433	1/4 NPT
1.125	1.713	1. 752	2.205	2.638	1.669	0.969	1.000	2.937	1.909	1.028	2.440	4.134	0.437	1/4 NPT
1.250	1.969	2.008	2.402	2.638	1.669	0.969	1.000	3.130	2.102	1.028	2.638	4.252	0.433	1/4 NPT
1.375	1.961	2.000	2.402	2.638	1.669	0.969	1.000	2.947	1.919	1.028	2.760	4.213	0.437	1/4 NPT
1.500	2.200	2.244	2.717	2.638	1.669	0.969	1.000	3.130	2.102	1.028	2.950	4.488	0.551	3/8 NPT
1.625	2.340	2.421	2.795	2.638	1.669	0.969	1.000	3.130	2.102	1.028	3.030	4.921	0.551	3/8 NPT
1.750	2.461	2.500	2.953	2.638	1.669	0.969	1.000	3.012	1.984	1.028	3.228	5.118	0.559	3/8 NPT
1.875	2.583	2.661	3.070	2.638	1.669	0.969	1.000	3.071	2.043	1.028	3.190	5.118	0.551	3/8 NPT
2.000	2.677	2.756	3.189	2.638	1.669	0.969	1.000	3.130	2.102	1.028	3.430	5.472	0.630	3/8 NPT
2.125	2.834	2.913	3.583	2.638	1.669	0.969	1.000	3.012	1.984	1.028	3.820	5.512	0.650	3/8 NPT
2.250	2.960	3.039	3.583	2.638	1.669	0.969	1.000	3.130	2.102	1.028	3.858	5.866	0.650	3/8 NPT
2.375	3.070	3.125	3.590	2.638	1.669	0.969	1.000	–	–	–	4.020	6.181	0.709	3/8 NPT
2.500	3.212	3.291	3.937	2.638	1.669	0.969	1.122	3.130	2.102	1.028	4.528	6.693	0.709	3/8 NPT
2.625	3.338	3.417	4.016	2.638	1.669	0.969	1.250	3.130	2.102	1.028	4.528	6.378	0.630	3/8 NPT
2.750	3.660	3.740	4.370	2.638	1.929	0.709	1.260	3.130	2.102	1.028	4.646	7.441	0.709	3/8 NPT
3.000	3.937	4.016	4.724	3.307	2.260	1.047	1.260	3.858	2.516	1.343	5.000	7.835	0.709	3/8 NPT
3.250	4.189	4.268	4.921	3.307	2.260	1.047	1.260	3.858	2.516	1.343	5.315	7.830	0.709	3/8 NPT
3.750	4.689	4.750	5.433	3.307	2.260	1.047	1.000	–	–	–	5.827	8.189	0.866	3/8 NPT

Cartex® ANSI Dual seals

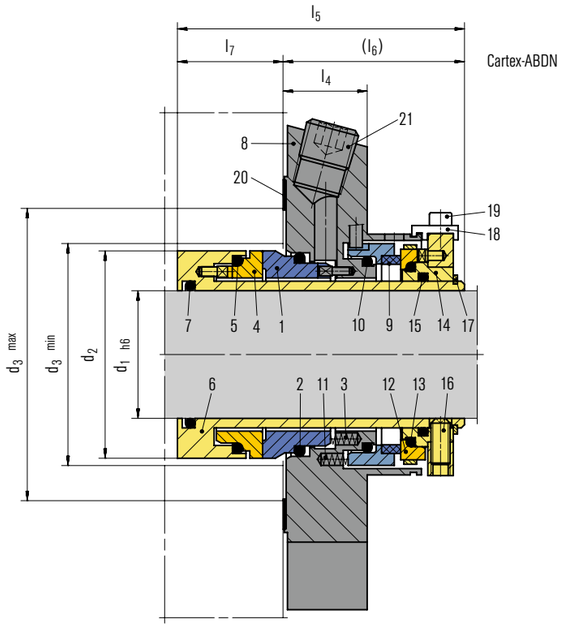

Features

- Dual seal
- Available for standard (Cartex-ASDN) and big bore (Cartex-ABDN) seal chambers
- Cartridge
- Balanced
- Independent of direction of rotation
- Double pressure balanced
- Integrated pumping device

Advantages

- Ideal for use in ANSI process pumps
- Universal applicable for packings conversions, retrofits or OEM
- Ideal seal for standardizations
- No dimensional modification of the seal chamber necessary, small radial installation height
- No damage of the shaft by dynamically loaded O-Ring
- Extended service life
- Installation faults are avoided, cost-effective
- No damage caused by dirt entered during assembly
- Straightforward and easy installation due to preassembled unit (reduced down-times)

Operating range (see note on page 1)

Shaft diameter: d_1 = 25 ... 100 mm (1.000" ... 4.000")
Other sizes on request
Temperature: t = –40 °C ... +220 °C (–40 °F ... +428 °F)
(Check O-Ring resistance)

Sliding face material combination BQ1
Pressure: p_1 = 25 bar (363 PSI)
Sliding velocity: vg = 16 m/s (52 ft/s)

Sliding face material combination Q1Q1 or U2Q1
Pressure: p_1 = 20 bar (290 PSI)
Sliding velocity: v_g = 10 m/s (33 ft/s)

Barrier fluid circulation system:
p_{3max} = 25 bar (363 PSI)
p_{3max} = 7 bar (102 PSI) for barrier media with poor lubricating properties
Δp (p_3 – p_1)ideal = 2 ... 3 bar (29 ... 44 PSI)

Pump startup:
Δp (p_3 – p_1)max = 25 bar (363 PSI) allowed

Recommended supply medium: max. ISO VG 5
Axial movement: ±1.0 mm, d_1 ≥ 75 mm ±1.5 mm

Item	Description
1	Seal face
2, 5, 7, 10, 13, 15	O-Ring
3	Spring
4	Seat
6	Shaft sleeve
8	Cover
9	Seal face
11	Spring
12	Seat
14	Drive collar
16	Set screw
17	Snap ring
18	Assembly fixture (remove after installation)
19	Hex socket head screw
20	Gasket
21	Screw plug
22	Gasket

Materials

Seal face: Silicon carbide (Q1), Carbon graphite resin impregnated (B), Tungsten carbide (U2)
Seat: Silicon carbide (Q1)
Secondary seals: FKM (V), EPDM (E), FFKM (K), Perfluorocarbon rubber/PTFE (U1)
Springs: Hastelloy® C-4 (M)
Metal parts: CrNiMo steel (G), CrNiMo cast steel (G)

Standards and approvals

- ANSI

Recommended applications

- Water and waste water technology
- Chemical industry
- Petrochemical industry
- Pharmaceutical industry
- Food and beverage industry
- Universally applicable
- ANSI process pumps

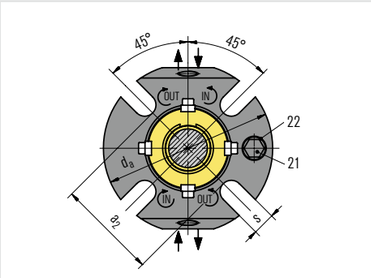

Machined cover version

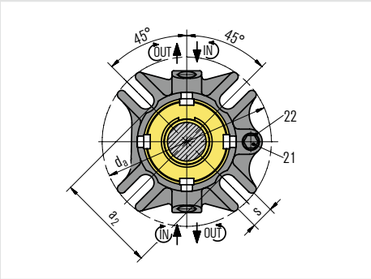

Cast cover version

Big bore – Dimensions in inch

d_1	d_2	$d_{3min.}$	$d_{3max.}$	l_4	l_5	l_6	l_7	a_2	d_a	s	Connection
1.000	–	–	–	–	–	–	–	–	–	–	–
1.125	1.713	1.752	2.795	1.000	3.228	1.886	1.343	3.311	4.500	0.437	1/4 NPT
1.250	–	–	–	–	–	–	–	–	–	–	–
1.375	1.960	2.000	3.189	1.000	3.406	2.083	1.323	3.543	5.118	0.437	1/4 NPT
1.500	–	–	–	–	–	–	–	–	–	–	–
1.625	–	–	–	–	–	–	–	–	–	–	–
1.750	2.461	2.500	4.055	1.000	3.406	2.083	1.323	4.567	6.496	0.559	3/8 NPT
1.875	2.583	2.661	3.937	1.000	3.406	2.083	1.323	4.409	5.984	0.551	3/8 NPT
2.000	2.677	2.756	4.567	1.260	3.406	2.102	1.303	4.882	6.260	0.551	3/8 NPT
2.125	2.834	2.913	4.528	1.000	3.406	2.102	1.303	5.276	6.890	0.709	3/8 NPT
2.250	2.960	3.093	4.409	1.276	3.406	2.102	1.303	4.685	6.417	0.709	3/8 NPT
2.500	3.212	3.299	5.276	1.250	3.406	2.102	1.303	5.512	7.795	0.709	3/8 NPT
2.625	3.338	3.17	5.118	1.250	3.406	2.102	1.303	5.354	6.890	0.709	3/8 NPT
2.750	3.660	3.740	5.236	1.276	3.406	2.102	1.303	5.512	7.480	0.630	3/8 NPT
3.000	3.937	4.016	5.512	1.276	3.406	2.516	1.303	5.906	8.228	0.650	3/8 NPT
3.250	–	–	–	–	–	–	–	–	–	–	–

Standard bore – Dimensions in inch

d_1	d_2	$d_{3\ min.}$	$d_{3\ max.}$	l_4	l_5	l_6	l_7	a_2	d_a	s	Connection
1.000	1.693	1.732	2.205	1.000	3.406	2.102	1.303	2.441	3.937	0.433	1/4 NPT
1.125	1.713	1. 752	2.205	1.000	3.228	3.228	1.343	2.441	4.134	0.437	1/4 NPT
1.250	1.969	2.008	2.402	1.000	3.406	2.102	1.303	2.756	4.252	0.433	1/4 NPT
1.375	1.961	2.000	2.402	1.000	3.406	2.083	1.303	2.756	4.213	0.437	1/4 NPT
1.500	2.200	2.244	2.717	1.000	3.406	2.102	1.303	2.953	4.488	0.551	3/8 NPT
1.625	2.340	2.421	2.795	1.000	3.406	2.102	1.303	3.091	4.921	0.551	3/8 NPT
1.750	2.461	2.500	2.953	1.000	3.406	2.102	1.303	3.228	5.118	0.559	3/8 NPT
1.875	2.583	2.661	3.070	1.000	3.406	2.102	1.303	3.307	5.118	0.551	3/8 NPT
2.000	2.677	2.756	3.189	1.000	3.406	2.102	1.303	3.425	5.472	0.630	3/8 NPT
2.125	2.834	2.913	3.583	1.000	3.406	2.102	1.303	3.819	5.512	0.650	3/8 NPT
2.250	2.960	3.039	3.583	1.000	3.406	2.102	1.303	3.858	5.866	0.650	3/8 NPT
2.375	3.070	3.125	3.590	1.000	–	–	–	–	6.181	0.709	3/8 NPT
2.500	3.212	3.291	3.937	1.122	3.406	2.102	1.303	4.528	6.693	0.709	3/8 NPT
2.625	3.338	3.417	4.016	1.250	3.406	2.102	1.303	4.528	6.378	0.630	3/8 NPT
2.750	3.660	3.740	4.370	1.260	3.406	2.102	1.303	4.646	7.441	0.709	3/8 NPT
3.000	3.937	4.016	4.724	1.260	4.252	2.516	1.736	5.000	7.835	0.709	3/8 NPT
3.250	4.189	4.268	4.921	1.260	4.252	2.516	1.736	5.315	7.830	0.709	3/8 NPT
3.750	4.689	4.750	5.433	1.000	–	–	–	–	8.189	0.866	3/8 NPT

MA290/MA390

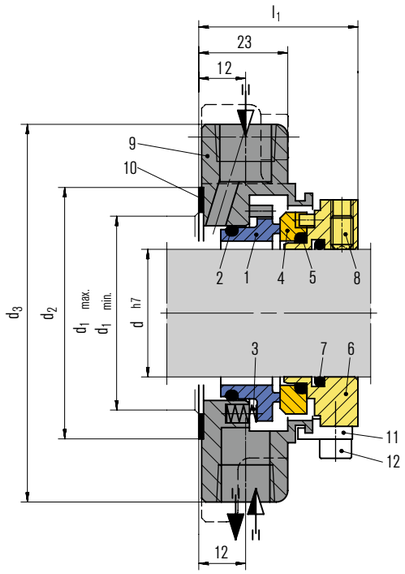

Features

- Cartridge
- Balanced
- Independent of direction of rotation
- Stationary multiple springs
- Springs and pin located on the atmospheric side

Operating range (see note on page 1)

MA290/MA390:
Pressure: p = ... 16 bar (232 PSI)
Temperature: t = –20 °C ... +160 °C (–4 °F ... +320 °F) (oil), 0 °C ... 60 °C (32 °F ... 140 °F) (water)
Sliding velocity: v_g = max. 20 m/s (66 ft/s)
Viscosity: 0.5 Pa·s
Solids content: 0.3 %

MA291/MA391:
Pressure: p = ... 10 bar (145 PSI)
Temperature: t = –20 °C ... +160 °C (–4 °F ... +320 °F) (oil), 0 °C ... 60 °C (32 °F ... 140 °F) (water)
Sliding velocity: v_g = max. 20 m/s (66 ft/s)
Viscosity: 3 Pa·s
Solids content: 10 %

Materials

Seal face (MA290, MA390): High density carbon graphite
Seal face (MA291, MA391): Silicon carbide (Q1)
Seat (MA290/291, MA390/391): Silicon carbide (Q1)
Metal parts: 1.4401 (G)
Secondary seals: FKM (V)

Standards and approvals

- EN 12756
- ISO 3096

Recommended applications

- Water and waste water technology
- Chemical industry
- Petrochemical industry
- Pharmaceutical industry
- Food and beverage industry
- Universally applicable
- Centrifugal pumps
- Eccentric screw pumps
- Process pumps

Item	Description
1	Seal face
2	O-Ring
3	Spring
4	Seat
5	O-Ring
6	Drive collar
7	O-Ring
8	Set screw
9	Seal cover
10	Gasket
11	Assembly fixture
12	HSH cap screw

Product variants

MA390 (MA391)
Axially downsized type of MA290 (MA291).

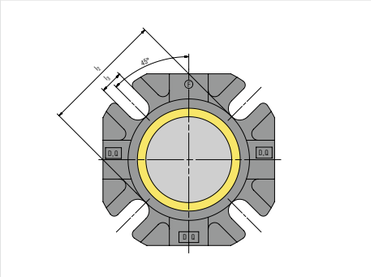

Seal cover **MA290 (MA291)**

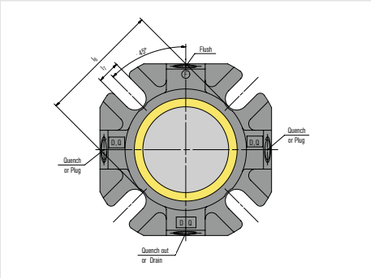

Seal cover **MA390 (MA391)**

Dimensions in mm

d	$d_{1min.}$	$d_{1max.}$	d_2	d_3	l_1	l_2	l_3
20	30	51	58	104	42	60	12
24	34	51	58	104	42	60	12
25	35	51	58	104	42	60	12
28	38	54	63	108	42	65	12
30	40	56	63	108	42	65	12
32	42	56	63	108	42	65	12
33	43	66	73	118	42	75	14
35	45	66	73	118	42	75	14
38	48	66	73	118	42	75	14
40	50	66	73	118	42	75	14
43	53	71	78	128	42	80	14
45	55	71	78	128	42	80	14
48	58	81	88	138	44	90	14
50	60	81	88	138	44	90	14
53	63	81	88	138	44	90	14
55	65	81	88	138	44	90	14
58	68	96	103	164	46	105	18
60	70	96	103	164	46	105	18
63	73	96	103	164	46	105	18
65	75	96	103	164	46	105	18
70	80	102	109	178	46	111	18
75	85	114	121	193	49	123	18
80	90	114	121	193	49	123	18
85	95	124	131	208	49	133	20
90	100	124	131	208	49	133	20
95	105	134	141	218	49	143	20
100	110	134	141	218	49	143	20

Unitex®

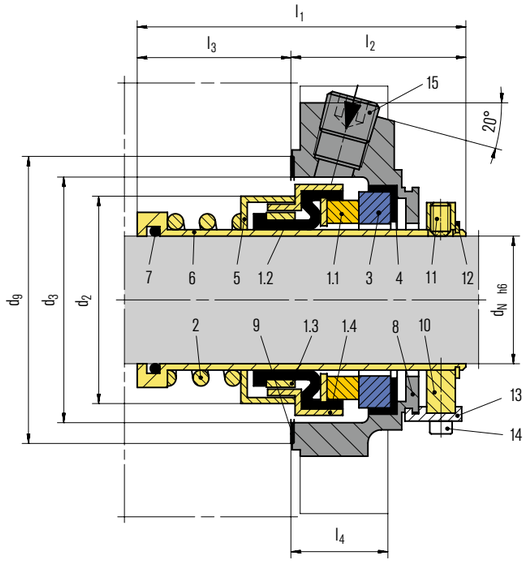

Features

- Single cartridge seal
- Elastomer bellows
- Unbalanced
- Independent of direction of rotation
- Stationary seat, rotating spring
- Bellows and spring free from torsion
- Metric and inch sizes available

Advantages

- Straightforward and easy installation
- Fits into any installation space due to smallest outer diameter
- Important material certifications available
- Universal application opportunities (standardization)
- No modifications of the pump's installation chamber necessary
- Economical cartridge solution
- Comes with flush connection acc. to API 682, Plan 11 for seal chamber cleaning and cooling

Operating range (see note on page 1)

Shaft diameter: d_N = 25 ... 75 mm (1" ... 2.625")
Pressure: p_1 = 12 bar (174 PSI)
Temperature: t = –20 °C ... +140 °C (–4 °F ... +284 °F)
Sliding velocity: v_g = 10 m/s (33 ft/s)
Axial movement: ±0.5 mm

Materials

Seal face: Carbon graphite resin impregnated (B), Silicon carbide (Q1)
Seat: Silicon carbide (Q1)
Secondary seals: FKM (V), EPDM (E)
Metal parts: CrNiMo steel (G), CrNiMo cast steel (G)

Recommended applications

- Water and waste water technology
- Cold and hot water
- Cooling fluids
- Beverages
- Diluted lyes and acids
- Suspensions with low solids content
- Circulating pumps
- Water and waste water pumps
- Production of pressure oils for bio diesel fuels

Standards and approvals

- Material approvals: e. g. FDA, KTW, WRAS, W270, NSF, ACS

Item	Description
1.1	Seal face
1.2	Bellows
1.3	Drive collar
1.4	"L"-ring (Spring collar)
2	Spring
3	Seat (G60)
4	O-Ring or corner sleeve
5	Spacer ring
6	Shaft sleeve
7	O-Ring
8	Cover
9	Gasket
10	Drive collar
11	Set screw
12	Snap ring
13	Assembly fixture
14	Socket head screw
15	Screw plug

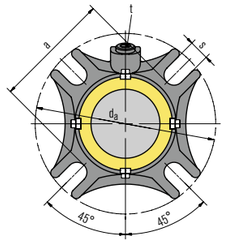

Seal cover

Seat alternative

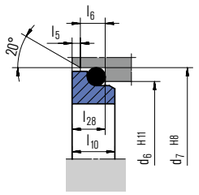

G6 (EN 12756)

Dimensions in mm

d_N	d_2	$d_{3min.}$	$d_{3max.}$	d_9	d_a	a	s	l_1	l_2	l_3	l_4	t
25	38.4	41.5	51.0	60	105	62	13.2	65.5	41.0	24.5	23	1/4 NPT
28	42.4	44.5	52.0	60	105	62	13.2	68.0	41.5	26.5	23	1/4 NPT
30	42.4	45.5	56.0	63	105	67	13.2	68.0	41.5	26.5	23	1/4 NPT
33	45.0	48.0	57.0	65	110	67	13.2	69.5	42.0	27.5	23	1/4 NPT
35	49.1	50.8	61.5	68	107	70	13.2	72.5	44.0	28.5	26	1/4 NPT
38	51.3	54.5	66.0	73	123	75	14.7	72.5	44.0	28.5	26	1/4 NPT
40	54.3	57.5	68.0	75	123	77	14.7	75.5	44.5	31.0	26	1/4 NPT
43	56.3	59.5	70.5	78	133	80	14.7	76.5	44.5	32.0	26	1/4 NPT
45	59.8	63.0	73.0	79	130	82	14.2	76.5	44.5	32.0	26	1/4 NPT
48	61.8	65.0	75.0	82	130	84	14.2	78.0	45.0	33.0	26	1/4 NPT
50	64.8	68.0	78.0	85	148	87	14.7	80.5	47.0	33.5	28	3/8 NPT
53	66.8	70.0	87.0	95	148	97	17.5	81.5	47.0	34.5	28	3/8 NPT
55	71.0	73.0	83.0	90	148	92	17.5	83.5	47.0	36.5	28	3/8 NPT
60	76.5	79.0	91.0	100	157	102	17.5	85.5	47.0	38.5	28	3/8 NPT
65	83.0	85.7	98.5	108	162	110	17.5	88.0	48.5	39.5	28	3/8 NPT
70	88.0	94.0	108.0	116	178	118	17.5	92.0	48.5	43.5	28	3/8 NPT
75	93.4	98.4	118.0	125	190	127	17.5	93.5	49.0	44.5	28	3/8 NPT

Dimensions in inch

d_N	d_2	$d_{3min.}$	$d_{3max.}$	d_9	d_a	a	s	l_1	l_2	l_3	l_4	t
1.000	1.512	1.634	2.000	2.362	4.134	2.440	0.520	2.579	1.614	0.965	0.906	1/4 NPT
1.125	1.669	1.750	2.050	2.362	4.134	2.441	0.520	2.677	1.634	1.043	0.906	1/4 NPT
1.250	1.772	1.890	2.250	2.559	4.331	2.638	0.520	2.736	1.654	1.083	0.906	1/4 NPT
1.375	1.933	2.000	2.420	2.677	4.213	2.756	0.520	2.854	1.732	1.122	1.024	1/4 NPT
1.500	2.020	2.146	2.625	2.874	4.843	2.950	0.579	2.854	1.732	1.122	1.024	1/4 NPT
1.750	2.354	2.480	2.812	3.110	5.118	3.230	0.559	3.012	1.752	1.260	1.024	1/4 NPT
1.875	2.433	2.559	2.940	3.228	5.118	3.307	0.559	3.071	1.772	1.299	1.024	1/4 NPT
2.000	2.551	2.677	3.190	3.346	5.827	3.430	0.579	3.169	1.850	1.319	1.102	3/8 NPT
2.125	2.795	2.875	3.437	3.740	5.512	3.820	0.689	3.287	1.850	1.437	1.102	3/8 NPT
2.250	2.874	2.992	3.560	3.780	6.181	3.858	0.689	3.287	1.850	1.437	1.102	3/8 NPT
2.375	3.012	3.110	3.590	3.937	6.181	4.020	0.689	3.366	1.850	1.516	1.102	3/8 NPT
2.500	3.209	3.287	3.800	4.173	6.693	4.252	0.689	3.465	1.909	1.555	1.102	3/8 NPT
2.625	3.268	3.374	3.937	4.252	6.378	4.331	0.689	3.465	1.909	1.555	1.102	3/8 NPT

Mtex Single seals

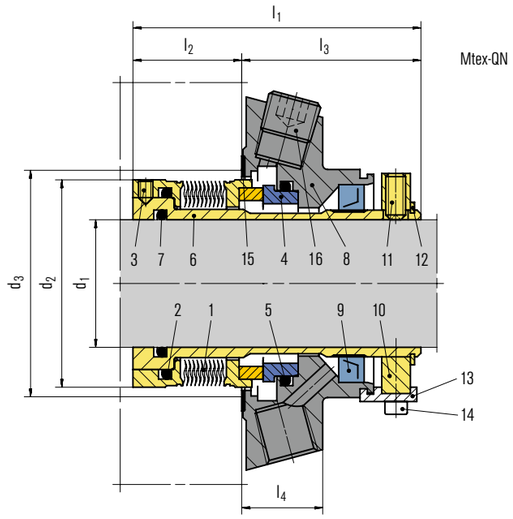

Features

- Single seal
- Cartridge
- Balanced
- Independent of direction of rotation
- Metal bellows
- Single seal with quench and lip seal (-QN) or throttle ring (-TN)
- Version available with multipoint injection ring (-QNM, -TNM)
- Supply connections for flush (A) and quench (B)

Advantages

- Ideal seal for standardizations
- Universal applicable for packings conversions, retrofits or OEM
- Suitable for high temperature
- No dimensional modification of the seal chamber necessary, small radial installation height
- Trouble-free running due to bellows unit with vibration dampers (essential in case of dry-running)
- No dynamically loaded O-Ring
- Self cleaning effect of the bellows
- Installation faults are avoided, cost-effective
- No damage caused by dirt entered during assembly
- Straightforward and easy installation due to preassembled unit (reduced down-times)
- Individual adaptation to pump design possible

Operating range (see note on page 1)

Shaft diameter: d_1 = 25 ... 80 mm (1" ... 3.15")
Temperature: t* = –40 °C ... +220 °C
(–40 °F ... +428 °F)
Pressure: p = 25 bar (363 PSI)
* Operating limits of O-Rings to be observed

Materials

Seal face: Carbon graphite antimony impregnated (A), Silicon carbide (Q1)
Seat: Silicon carbide (Q1)
Secondary seals: FKM (V), EPDM (E), FFKM (K)
Bellows: Inconel® 718 (M6)
Metal parts: CrNiMo steel (G), Duplex (G1)
Throttle ring: PTFE carbon graphite reinforced (T12)
Lip seal: NBR (P), PTFE carbon reinforced (T3)

Item	Description
1	Bellows unit
2, 5, 7	O-Ring
3, 11	Set screw
4	Seat
6	Shaft sleeve
8	Cover
9	Lip seal or throttle ring
10	Drive collar
12	Retaining ring
13	Assembly fixture
14	Hex socket head screw
15	Gasket
16	Screw plug

Recommended applications

- Refining technology
- Petrochemical industry
- Hot media
- Cold media
- Highly viscous media
- Pumps
- Special rotating equipment

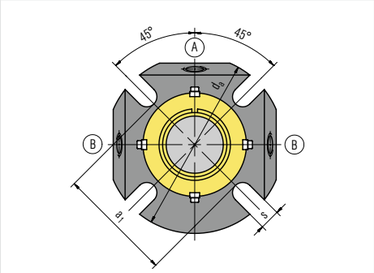

Seal cover

Product variants

Mtex-QNM
Single seal, as Mtex-QN
with additional multipoint injection ring (item B)

Mtex-TNM
Single seal, as Mtex-TN
with additional multipoint injection ring (item B)

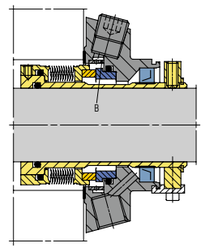

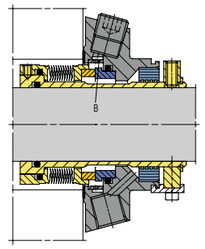

Dimensions in mm

d_1	d_2	$d_{3min.}$	$d_{3max.}$	l_1	l_2	l_3	l_4	d_a	a_1	s
25	45.0	47.0	51.0	79.5	26.1	53.4	25.4	105.0	62.0	13.2
30	49.4	52.0	56.0	78.4	25.0	53.4	25.4	105.0	67.0	13.2
32	52.3	54.5	57.0	78.4	25.0	53.4	25.4	108.0	70.0	13.2
33	52.3	54.5	57.0	78.4	25.0	53.4	25.4	108.0	70.0	13.2
35	54.8	58.0	61.5	78.4	25.0	53.4	25.4	113.0	72.0	13.2
38	57.5	60.0	66.0	78.4	25.0	53.4	25.4	123.0	75.0	13.2
40	58.8	62.0	68.0	78.2	24.8	53.4	25.4	123.0	77.0	14.2
43	61.9	64.5	70.5	78.4	25.0	53.4	25.4	133.0	80.0	14.2
45	65.0	68.5	73.0	78.4	25.0	53.4	25.4	138.0	82.0	14.2
48	68.4	71.0	75.0	78.7	25.3	53.4	25.4	138.0	85.0	14.2
50	70.0	73.0	78.0	79.1	25.7	53.4	25.4	148.0	87.0	14.2
53	71.9	75.0	87.0	77.8	24.4	53.4	25.4	148.0	97.0	18.0
55	74.6	77.0	83.0	78.9	25.5	53.4	25.4	148.0	92.0	18.0
60	83.9	87.0	91.0	80.1	26.7	53.4	25.4	157.0	102.0	18.0
65	87.5	90.0	98.5	80.0	26.6	53.4	25.4	163.0	109.3	18.0
70	93.0	98.0	108.0	81.5	28.1	53.4	25.4	178.0	118.3	18.0
75	96.8	101.6	118.0	94.4	30.5	63.9	28.0	190.0	129.0	18.0
80	104.7	108.0	124.0	94.4	30.4	64.0	28.0	195.0	135.0	18.0

Mtex Dual seals

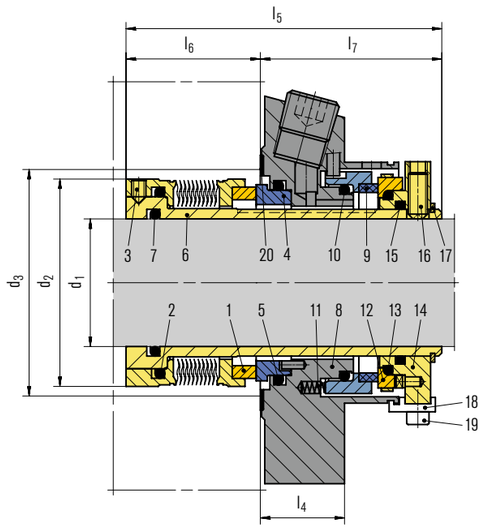

Features

- Double seal
- Mtex-DN: API Plan 52 (53/54)
- Mtex9-DN: API Plan 53/54
- Cartridge
- Balanced
- Independent of direction of rotation
- Metal bellows
- Stationary O-Ring
- Pumping device independent of direction of rotation

Advantages

- Ideal seal for standardizations
- Universal applicable for packings conversions, retrofits or OEM
- Suitable for high temperature
- No dimensional modification of the seal chamber necessary, small radial installation height
- Trouble-free running due to bellows unit with vibration dampers (essential in case of dry-running)
- No damage of the shaft by dynamically loaded O-Ring
- Self cleaning effect of the bellows
- Installation faults are avoided, cost-effective
- No damage caused by dirt entered during assembly
- Straightforward and easy installation due to preassembled unit (reduced down-times)
- Individual adaptation to pump design possible

Operating range (see note on page 1)

Shaft diameter: d_1 = 25 ... 80 mm (1" ... 3.15")
Temperature: t* = –40 °C ... +220 °C (–40 °F ... +428 °F)
Pressure: p_1 = 25 bar (232 PSI)
Sliding velocity: v_g = 20 m/s (66 ft/s)

Barrier fluid circulation system:
p_{3max} = 16 bar (232 PSI)
Δp (p_3 – p_1) ideal = 2 ... 3 bar (29 ... 44 PSI)
Δp (p3 – p1) max. = 10 bar (145 PSI) at < 120 °C
(< 248 °F), = 5 bar (73 PSI) at ≤ 220 °C (≤ 232 °F)

API Plan 52 (53/54)

Pump startup:
Δp (p_3 – p_1) max = 16 bar (232 PSI) allowed
* Operating limits of O-Rings to be observed

Item	Description
1	Bellows unit
2, 5, 7, 10, 13, 15	O-Ring
3	Set screw
4	Seat
6	Shaft sleeve
8	Cover
9	Seal face
11	Spring
12	Seat
14	Drive collar
16	Set screw
17	Retaining ring
18	Assembly fixture
19	Hex socket head screw
20	Gasket

Recommended seal supply

EagleBurgmann TS2000 Thermosiphon system

Recommended applications

- Refining technology
- Petrochemical industry
- Hot media
- Cold media
- Highly viscous media
- Pumps
- Special rotating equipment

Materials

Seal face: Carbon graphite (A), Silicon carbide (Q1)
Seat: Silicon carbide (Q1), Tungsten carbide (U2)
Secondary seals: FPM (V), EPDM (E), FFKM (K)
Bellows: Inconel® 718 (M6)
Springs: Hastelloy® C-4 (M)
Metal parts: CrNiMo steel (G), Duplex (G1)

Product variant

Mtex9-DN
Dimensions, items and descriptions as for Mtex-DN, but with optimized seal face geometry for pressurized operation according to API Plan 53/54. A barrier fluid system (e. g. EagleBurgmann TS2000) is necessary.

Pressure: p_1 = 10 bar (145 PSI)
Sliding velocity: v_g = 20 m/s (66 ft/s)

Barrier fluid circulation system:
$p_3$max = 16 bar (232 PSI)
Δp (p_3 – p_1) ideal = 2 ... 3 bar (29 ... 44 PSI)
Δp (p_3 – p_1) max = 16 bar (232 PSI)

API Plan 53/54

Pump startup:
Δp (p_3 – p_1) max = 16 bar (232 PSI) allowed

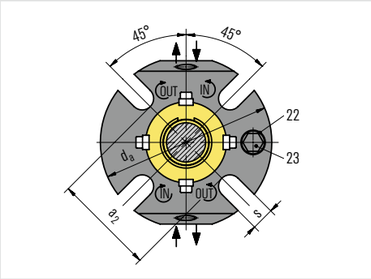

Seal cover

Dimensions in mm

d_1	d_2	$d_{3min.}$	$d_{3max.}$	l_4	l_5	l_6	l_7	d_a	a_2	s
25	45.0	47.0	51.0	25.4	87.0	33.6	53.4	105.0	62.0	13.2
30	49.4	52.0	56.0	25.4	86.5	33.1	53.4	105.0	67.0	13.2
32	52.3	54.5	57.0	25.4	86.5	33.1	53.4	108.0	70.0	13.2
33	52.3	54.5	57.0	25.4	86.5	33.1	53.4	108.0	70.0	13.2
35	54.8	58.0	61.5	25.4	86.5	33.1	53.4	113.0	72.0	13.2
38	57.5	60.0	66.0	25.4	86.5	33.1	53.4	123.0	75.0	14.0
40	58.8	62.0	68.0	25.4	86.3	32.9	53.4	123.0	77.0	14.2
43	61.9	64.5	70.5	25.4	86.5	33.1	53.4	133.0	80.0	14.2
45	65.0	68.5	73.0	25.4	86.5	33.1	53.4	138.0	82.0	14.2
48	68.4	71.0	75.0	25.4	86.8	33.4	53.4	138.0	85.0	14.2
50	70.0	73.0	78.0	25.4	87.2	33.8	53.4	148.0	87.0	14.2
53	71.9	75.0	87.0	25.4	87.4	34.0	53.4	148.0	97.0	18.0
55	74.6	77.0	83.0	25.4	87.0	33.6	53.4	148.0	92.0	18.0
60	83.9	87.0	91.0	25.4	88.2	34.8	53.4	157.0	102.0	18.0
65	87.5	90.0	98.5	25.4	88.1	34.7	53.4	163.0	109.3	18.0
70	93.0	98.0	108.0	25.4	89.6	36.2	53.4	178.0	118.3	18.0
75	96.8	101.6	118.0	28.0	107.4	43.5	63.9	190.0	129.0	18.0
80	104.7	108.0	124.0	28.0	106.8	42.9	63.9	195.0	135.0	18.0

APItex®

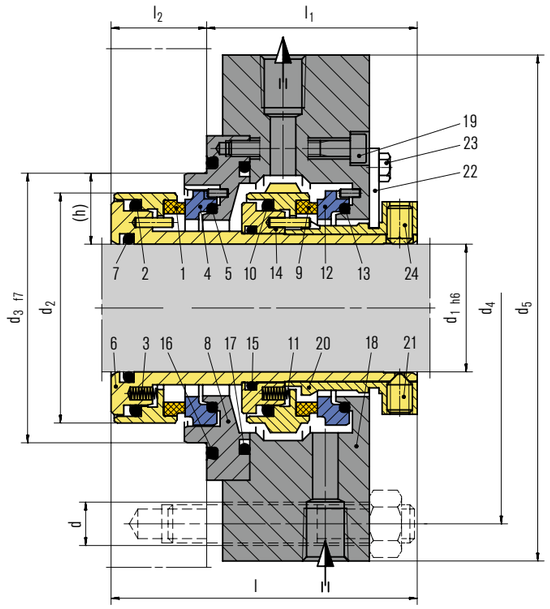

Features

- Single and dual seals
- Cartridge
- Seal design according API 682/ISO 21049
- Category 1, Type A, Arrangement 1, 2 or 3
- Balanced
- Version independent of direction of rotation available
- Shrink-fitted seal faces
- Solid seats
- Single seals with API plan 11 and 61 (Apitex-SA)
- Dual seals with API plan 52/53 (Apitex-DAP)
- Other flush plans available

Advantages

- Suitable for pressure reversal
- Insensitive to shaft deflections and process fluctuations
- Cover distortion cannot cause seat misalignment
- Good heat dissipation
- No external pump necessary
- Pre-assembled unit, ready to install
- Low space requirements
- Springs protected from the product
- Security due to proofed design

Operating range (see note on page 1)

Shaft diameter: d_1 = 20 ... 110 mm (0.750" ... 4.300"), other sizes on request
Pressure: p_1 = 22 bar (319 PSI)
Temperature: t = –40 °C ... + 260 °C (–40 °F ... + 500 °F)
(> 220 °C (428 °F) please inquire)
Sliding velocity: v_g = 23 m/s (75 ft/s)

Materials

Seal face: Carbon graphite antimony impregnated (A), Silicon carbide sintered pressureless (Q12)
Seat: Silicon carbide sintered pressureless (Q1)
Secondary seals: FKM (V), FFKM (K), NBR (P), EPDM (E)
Springs: Hastelloy® C-4 (M)* and C-276 (M5)
Metal parts: CrNiMo steel (G)
* EagleBurgmann standard

Standards and approvals

- API 682/ISO 21049

Recommended applications

- Chemical industry
- Petrochemical industry
- Oil and gas industry
- Light volatile and highly viscous hydrocarbons
- Toxic and hazardous media
- Media with poor lubrication properties
- Low solids content and low abrasive media
- Vertical and horizontal ANSI chemical standard pumps

Item	Description
1, 9	Seal face
2, 5, 7, 10, 13, 15, 16, 17	O-Ring
3, 11	Spring
4, 12	Seat
6	Shaft sleeve
8	Adapter
14	Driver
18	Housing
19	HSH Cap screw
20	Set ring
21	Set screw
22	Assembly fixtures
23	Hexagon bolt
24	Set screw

Product variant

APItex-SA single seal

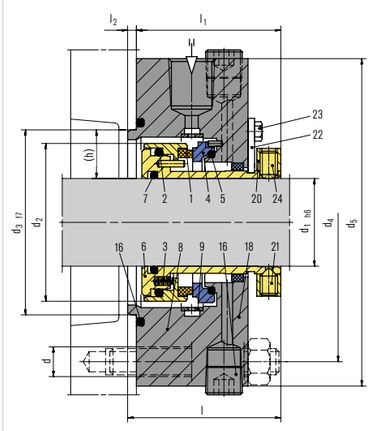

Dimensions in mm

d_1	d_2	d_3	d_4	d_5	l	l_1	l_2	d	Anz.	Acc. to ASME B73.1 (h min.)
20	50.4	58	105	127	96.5	68.5	28	13.5	4	19.05
25	55.4	63	110	132	96.5	68.5	28	13.5	4	19.05
30	60.4	68	115	137	96.5	68.5	28	13.5	4	19.05
35	65.4	73	120	142	96.5	68.5	28	13.5	4	19.05
40	70.4	78	125	147	96.5	68.5	28	13.5	4	19.05
45	75.4	83	135	162	96.5	68.5	28	17.5	4	19.05
50	80.4	88	140	167	100	72	28	17.5	4	19.05
55	85.4	93	145	172	100	72	28	17.5	4	19.05
60	96	105	160	187	127.5	88	39.5	17.5	4	22.22
65	101	110	165	192	127.5	88	39.5	17.5	4	22.22
70	106	115	170	197	127.5	88	39.5	17.5	4	22.22
75	111	120	175	202	127.5	88	39.5	17.5	4	22.22
80	116	125	185	213	127.5	88	39.5	22	4	22.22
85	123.5	136	190	223	131.5	92	39.5	22	4	25.4
90	128.5	141	195	228	131.5	92	39.5	22	4	25.4
95	133.5	146	200	233	131.5	92	39.5	22	4	25.4
100	138.5	151	205	238	131.5	92	39.5	22	4	25.4
105	143.5	156	210	243	131.5	92	39.5	22	4	25.4
110	152.5	161	215	248	131.5	92	39.5	22	4	25.4

MG1

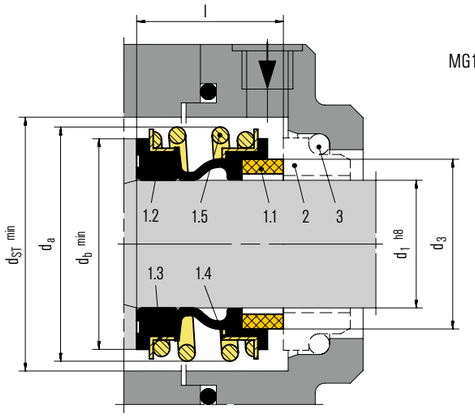

Features

- For plain shafts
- Single and dual seal
- Elastomer bellows rotating
- Unbalanced
- Independent of direction of rotation
- No torsion on bellows

Advantages

- Shaft protection over the entire seal length
- Protection of the seal face during installation due to special bellows design
- Insensitive to shaft deflections due to large axial movement ability
- Universal application opportunities
- Important material certifications available
- High flexibility due to wide offer on materials
- Suitable for low-end sterile applications
- Special design for hot water pumps (RMG12) available
- Dimension adaptions and additional seats available

Recommended applications

- Water and waste water technology
- Food and beverage industry
- Pulp and paper industry
- Chemical industry
- Oil applications
- Water, waste water, slurries (up to 5 % by weight)
- Pulp (up to 4 % otro)
- Latex
- Dairies, beverages
- Sulfide slurries
- Chemicals
- Oils
- Chemical standard pumps
- Helical screw pumps
- Stock pumps
- Circulating pumps
- Submersible pumps
- Water and waster water pumps

Item	Part no. to DIN 24250	Description
1.1	472	Seal face
1.2	481	Bellows
1.3	484.2	"L"-ring (spring collar)
1.4	484.1	"L"-ring (spring collar)
1.5	477	Spring
2	475	Seat
3	412	O-Ring or cup rubber

Operating range (see note on page 1)

Shaft diameter: d_1 = 10 ... 100 mm (0.39" ... 3.94")
Pressure: p_1 = 16 bar (230 PSI),
vacuum ... 0.5 bar (7.25 PSI), up to 1 bar (14.5 PSI) with seat locking
Temperature: t = –20 °C ... +140 °C (–4 °F ... +284 °F)
Sliding velocity: v_g = 10 m/s (33 ft/s)
Axial movement: ±2.0 mm

Materials

Seal face: Carbon graphite antimony impregnated (A), Carbon graphite resin impregnated (B), Silicon carbide (Q1), Tungsten carbide (U3)
Seat: Silicon carbide (Q1, Q2), Tungsten carbide (U3), Special cast CrMo steel (S), Aluminium oxide (V)
Elastomer: NBR (P), EPDM (E), FKM (V), HNBR (X4)
Metal parts: CrNiMo steel (G), Hastelloy® C-4 (M)

Standards and approvals

- Material approvals: e. g. FDA, WRAS, KTW, ACS, W270, NSF
- EN12756 (MG12, MG13)

Product variants

MG12
Dimensions, items and designations same as for MG1, but with an extended bellows tail to achieve the fitting length l_{1k} according to EN 12756 in combination with seat G6 or G60 (d_a exceeds EN 12756).

MG1S20
Dimensions, items and designations same as for MG1, but with an extended bellows tail to achieve the special fitting length l_{1S} in combination with seat G50.

MG13
Dimensions, items and designations same as for MG1, but with an extended bellows tail to achieve the fitting length l_{1N} according to EN 12756 in combination with seat G6 or G60 (d_a exceeds EN 12756).

RMG12
Identical to MG12, but with a special bellows surface on the shaft side. For use in hot water pumps up to 120 °C (248 °F) and 25 bar (363 ft/s) or 140 °C (284 °F) and 16 bar (232 PSI). Only in combination with seat G606 (d_1 = 12 ... 38 mm) (0.47" ... 1.50").
Seal face: Tungsten Carbide (U3)
Seat G606: Carbon graphite resin impregnated (B)

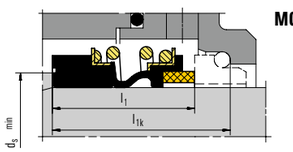

MG12

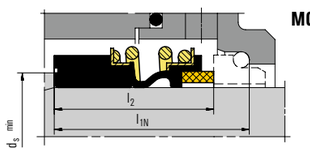

MG13

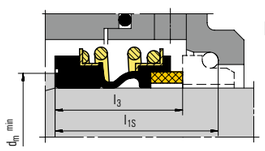

MG1S20

Seat alternatives

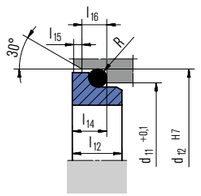

G4

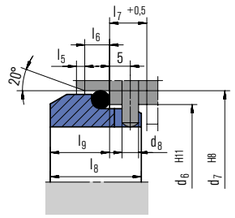

G9 EN 12756

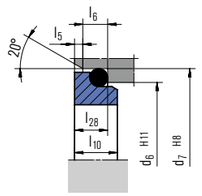

G6 EN 12756

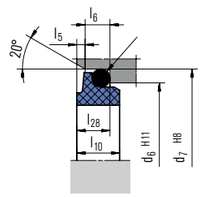

G606 EN 12756
(for RMG12 only)

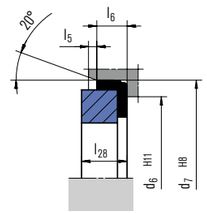

G60 EN 12756

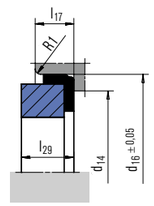

G50 Euro standard

Dimensions in mm

d_1	d_3	d_6	d_7	d_8	d_{11}	d_{12}	d_{14}	d_{16}	d_a	d_b*)	d_m*)	d_s*)	d_{ST}	l	l_1	l_{1k}	l_{1N}	l_{1S}	l_2	l_3	l_5	l_6	l_7	l_8	l_9	l_{10}	l_{12}	l_{14}	l_{15}	l_{16}	l_{17}	l_{28}	l_{29}	R
10	15.7	17	21	3	15.5	19.2	11.0	24.60	22.5	20.5	18	18	24	14.5	25.9	32.5	40	34.0	33.4	25	1.5	4	8.5	17.5	10.0	7.5	7.5	6.6	1.2	3.8	7.5	6.6	9.0	1.2
12	17.7	19	23	3	17.5	21.6	13.5	27.80	25.0	22.5	20	20	26	15.0	25.9	32.5	40	34.0	33.4	25	1.5	4	8.5	17.5	10.0	7.5	6.5	5.6	1.2	3.8	7.5	6.6	9.0	1.2
14	19.7	21	25	3	20.5	24.6	17.0	30.95	28.5	26.5	22	22	30	17.0	28.4	35.0	40	35.5	33.4	25	1.5	4	8.5	17.5	10.0	7.5	6.5	5.6	1.2	3.8	9.0	6.6	10.5	1.2
15	20.8	–	–	–	20.5	24.6	17.0	30.95	28.5	26.5	22	22	30	17.0	28.4	–	–	35.5	33.4	25	–	–	–	–	–	–	7.5	6.6	1.2	3.8	9.0	–	10.5	1.2
16	21.0	23	27	3	22.0	28.0	17.0	30.95	28.5	26.5	22	22	30	17.0	28.4	35.0	40	35.5	33.4	25	1.5	4	8.5	17.5	10.0	7.5	8.5	7.5	1.5	5.0	9.0	6.6	10.5	1.5
18	23.7	27	33	3	24.0	30.0	20.0	34.15	32.0	29.0	29	26	33	19.5	30.0	37.5	45	35.5	37.5	25	2.0	5	9.0	19.5	11.5	8.5	9.0	8.0	1.5	5.0	9.0	7.5	10.5	1.5
19	26.7	–	–	–	–	–	20.0	34.15	37.0	33.0	33	28	38	21.5	30.0	–	–	35.5	37.5	25	–	–	–	–	–	–	–	–	–	–	9.0	–	10.5	–
20	26.7	29	35	3	29.5	35.0	21.5	35.70	37.0	33.0	33	28	38	21.5	30.0	37.5	45	35.5	37.5	25	2.0	5	9.0	19.5	11.5	8.5	8.5	7.5	1.5	5.0	9.0	7.5	10.5	1.5
22	27.7	31	37	3	29.5	35.0	23.0	37.30	37.0	33.0	33	28	38	21.5	30.0	37.5	45	35.5	37.5	25	2.0	5	9.0	19.5	11.5	8.5	8.5	7.5	1.5	5.0	9.0	7.5	10.5	1.5
24	31.2	33	39	3	32.0	38.0	26.5	40.50	42.5	38.0	38	32	44	22.5	32.5	40.0	50	35.5	42.5	25	2.0	5	9.0	19.5	11.5	8.5	8.5	7.5	1.5	5.0	9.0	7.5	10.5	1.5
25	31.2	34	40	3	32.0	38.0	26.5	40.50	42.5	38.0	38	32	44	23.0	32.5	40.0	50	35.5	42.5	25	2.0	5	9.0	19.5	11.5	8.5	8.5	7.5	1.5	5.0	9.0	7.5	10.5	1.5
28	35.0	37	43	3	36.0	42.0	29.5	47.65	49.0	44.0	37	37	50	26.5	35.0	42.5	50	45.0	42.5	33	2.0	5	9.0	19.5	11.5	8.5	10.0	9.0	1.5	5.0	10.5	7.5	12.0	1.5
30	37.0	39	45	3	39.2	45.0	32.5	50.80	49.0	44.0	37	37	50	26.5	35.0	42.5	50	45.0	42.5	33	2.0	5	9.0	19.5	11.5	8.5	11.5	10.5	1.5	5.0	10.5	7.5	12.0	1.5
32	40.2	42	48	3	42.2	48.0	32.5	50.80	53.5	46.0	41	41	55	27.5	35.0	42.5	55	45.0	47.5	33	2.0	5	9.0	19.5	11.5	8.5	11.5	10.5	1.5	5.0	10.5	7.5	12.0	1.5
33	40.2	42	48	3	44.2	50.0	36.5	54.00	53.5	46.0	41	41	55	27.5	35.0	42.5	55	45.0	47.5	33	2.0	5	9.0	19.5	11.5	8.5	12.0	11.0	1.5	5.0	10.5	7.5	12.0	1.5
35	43.2	44	50	3	46.2	52.0	36.5	54.00	57.0	50.0	44	44	59	28.5	35.0	42.5	55	45.0	47.5	33	2.0	5	9.0	19.5	11.5	8.5	12.0	11.0	1.5	5.0	10.5	7.5	12.0	1.5
38	46.2	49	56	4	49.2	55.0	39.5	57.15	59.0	53.0	53	47	61	30.0	36.0	45.0	55	45.0	46.0	33	2.0	6	9.0	22.0	14.0	10.0	11.3	10.3	1.5	5.0	10.5	9.0	12.0	1.5
40	48.8	51	58	4	52.2	58.0	42.5	60.35	62.0	55.0	55	49	64	30.0	36.0	45.0	55	45.0	46.0	33	2.0	6	9.0	22.0	14.0	10.0	11.8	10.8	1.5	5.0	10.5	9.0	12.0	1.5
42	51.8	–	–	–	53.3	62.0	46.0	63.50	65.5	58.0	53	53	67	30.0	36.0	–	–	53.0	51.0	41	–	–	–	–	–	–	13.2	12.0	2.0	6.0	10.5	–	12.0	2.5
43	51.8	54	61	4	53.3	62.0	46.0	63.50	65.5	58.0	53	53	67	30.0	36.0	45.0	60	53.0	51.0	41	2.0	6	9.0	22.0	14.0	10.0	13.2	12.0	2.0	6.0	10.5	9.0	12.0	2.5
45	53.8	56	63	4	55.3	64.0	46.0	63.50	68.0	60.0	55	55	70	30.0	36.0	45.0	60	53.0	51.0	41	2.0	6	9.0	22.0	14.0	10.0	12.8	11.6	2.0	6.0	10.5	9.0	12.0	2.5
48	56.8	59	66	4	59.7	68.4	49.0	66.70	70.5	63.0	58	58	74	30.5	36.0	45.0	60	53.0	51.0	41	2.0	6	9.0	22.0	14.0	10.0	12.8	11.6	2.0	6.0	10.5	9.0	12.0	2.5
50	58.8	62	70	4	60.8	69.3	52.0	69.85	74.0	65.0	60	60	77	30.5	38.0	47.5	60	54.5	50.5	41	2.5	6	9.0	23.0	15.0	10.5	12.8	11.6	2.0	6.0	12.0	9.5	13.5	2.5
53	62.2	65	73	4	63.8	72.3	55.5	73.05	78.5	70.0	63	63	81	33.0	36.5	47.5	70	54.5	59.0	41	2.5	6	9.0	23.0	15.0	12.0	13.5	12.3	2.0	6.0	12.0	11.0	13.5	2.5
55	64.2	67	75	4	66.5	75.4	58.5	76.20	81.0	72.0	65	65	83	35.0	36.5	47.5	70	54.5	59.0	41	2.5	6	9.0	23.0	15.0	12.0	14.5	13.3	2.0	6.0	12.0	11.0	13.5	2.5
58	67.2	70	78	4	69.5	78.4	61.5	79.40	85.5	75.0	68	68	88	37.0	41.5	52.5	70	54.5	59.0	41	2.5	6	9.0	23.0	15.0	12.0	14.5	13.3	2.0	6.0	12.0	11.0	13.5	2.5
60	70.0	72	80	4	71.5	80.4	61.5	79.40	88.5	79.0	70	70	91	38.0	41.5	52.5	70	54.5	59.0	41	2.5	6	9.0	23.0	15.0	12.0	14.5	13.3	2.0	6.0	12.0	11.0	13.5	2.5
65	75.0	77	85	4	76.5	85.4	68.0	92.10	93.5	84.0	77	77	96	40.0	41.5	52.5	80	65.0	69.0	49	2.5	6	9.0	23.0	15.0	12.0	14.2	13.0	2.0	6.0	14.5	11.0	16.0	2.5
68	78.0	81	90	4	82.7	91.5	71.0	95.25	96.5	88.0	80	80	100	40.0	41.2	52.5	80	65.0	68.7	49	2.5	7	9.0	26.0	18.0	12.5	14.9	13.7	2.0	6.0	14.5	11.3	16.0	2.5
70	80.0	83	92	4	83.0	92.0	71.0	95.25	99.5	90.0	82	82	103	40.0	48.7	60.0	80	65.0	68.7	49	2.5	7	9.0	26.0	18.0	12.5	14.2	13.0	2.0	6.0	14.5	11.3	16.0	2.5
75	85.5	88	97	4	90.2	99.0	77.5	101.60	107.0	95.0	87	87	110	40.0	48.7	60.0	80	68.0	68.7	52	2.5	7	9.0	26.0	18.0	12.5	15.2	14.0	2.0	6.0	14.5	11.3	16.0	2.5
80	90.5	95	105	4	95.2	104.0	84.0	114.30	112.0	100.0	92	92	116	40.0	48.0	60.0	90	76.0	78.0	56	3.0	7	9.0	26.2	18.2	13.0	16.2	15.0	2.0	6.0	18.5	12.0	20.0	2.5
85	96.0	100	110	4	100.2	109.0	87.0	117.50	120.0	107.0	97	97	124	41.0	46.0	60.0	90	76.0	76.0	56	3.0	7	9.0	26.2	18.2	15.0	16.0	14.8	2.0	6.0	18.5	14.0	20.0	2.5
90	102.0	105	115	4	105.2	114.0	93.5	123.85	127.0	114.0	104	104	131	45.0	51.0	65.0	90	79.0	76.0	59	3.0	7	9.0	26.2	18.2	15.0	16.0	14.8	2.0	6.0	18.5	14.0	20.0	2.5
95	107.0	110	120	4	111.6	120.3	96.5	127.00	132.0	119.0	109	109	136	46.0	51.0	65.0	90	79.0	76.0	59	3.0	7	9.0	25.2	17.2	15.0	17.0	15.8	2.0	6.0	18.5	14.0	20.0	2.5
100	112.0	115	125	4	114.5	123.3	103.0	133.35	137.0	124.0	114	114	140	47.0	51.0	65.0	90	82.0	76.0	62	3.0	7	9.0	25.2	17.2	15.0	17.0	15.8	2.0	6.0	18.5	14.0	20.0	2.5

Fitting length/axial movement tolerances: d_1 10 ... 12 mm ±0.5; d_1 14 ... 18 mm ±1.0; d_1 20 ... 26 mm ±1.5; d_1 = 28 ... 100 mm ±2.0
*) Minimum diameter of the mating collar

MG9

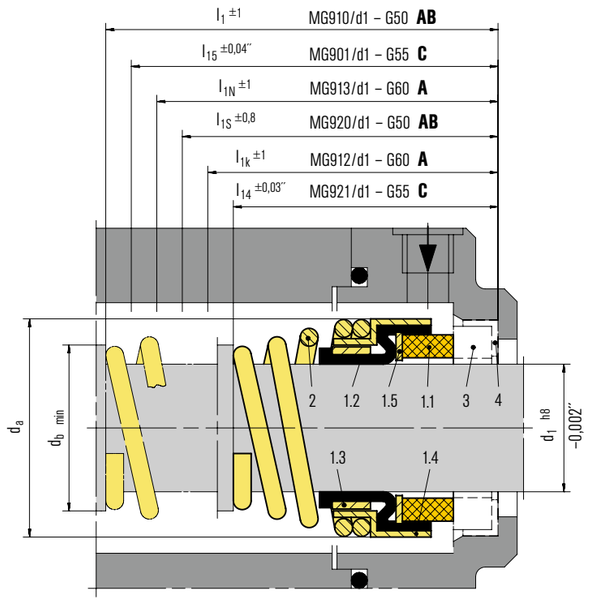

Features

- For plain shafts
- Single and dual seal
- Elastomer bellows rotating
- Unbalanced
- Independent of direction of rotation
- No torsion on bellows and spring
- Conical or cylindrical spring
- Metric and inch sizes available
- Special seat dimensions available
- US Patent No. 6.220.601

Advantages

- Fits into any installation space due to smallest outer seal diameter
- Important material approvals available
- Individual installation length can be achieved
- High flexibility due to extended selection of materials
- Universal application (standardization)

Operating range (see note on page 1)

Shaft diameter: d_1 = 10 ... 100 mm (0.375" ... 4")
Pressure: p_1 = 12 bar (174 PSI),
vacuum ... 0.5 bar (7.25 PSI), up to 1 bar (14.5 PSI) with seat locking
Temperature: t = –20 °C ... +140 °C (–4 °F ... +284 °F)
Sliding velocity: v_g = 10 m/s (33 ft/s)
Axial movement: ±0.5 mm

Materials

Seal face: Carbon graphite antimony impregnated (A), Carbon graphite resin impregnated (B), Silicon carbide (Q1)
Seat: Silicon carbide (Q1, Q2), Aluminium oxide (V)
Elastomer: NBR (P), EPDM (E), FKM (V), HNBR (X4)
Metal parts: CrNiMo steel (G)

Standards and approvals

- EN 12756
- Material approvals: e. g. FDA, KTW, WRAS, W270, NSF, ACS.

Recommended applications

- Water and waste water technology
- Food and beverage industry
- Chemical Industry
- Cooling fluids
- Media with low solids content
- Pressure oils for bio diesel fuels
- Circulating pumps
- Submersible pumps
- Multi-stage pumps (non-drive side)
- Water and waste water pumps
- Oil applications

Item	Part no. to DIN 24250	Description
1.1	472	Seal face
1.2	481	Bellows
1.3	485	Driver collar
1.4	484.1	"L" ring (spring collar)
1.5	474	Washer
2	477	Spring
3	475	Seat
4	412	Rubber cup

Seat alternatives

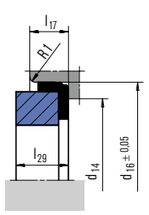

G50 Euro standard

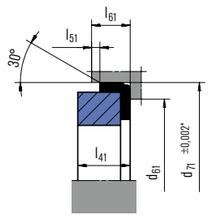

G55 US standard

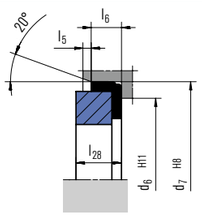

G60 EN 12756

MG9 ... the alternative

EagleBurgmann*	Crane*	Sealol*	Dimensions	Table
MG910/d_1-G50	1A	43 CE long	Inch/mm	B
	1A	43 CE long	mm	A
MG920/d_1-G50	2	43 CE short	Inch/mm	B
	2	43 CE short	mm	A
MG901/d_1-G55	1	43 CU long	Inch (USA only)	C
MG921/d_1-G55	2	43 CU short	Inch (USA only)	C
	21	43 CU short	Inch (USA only)	C
MG912/d_1-G60	502	43 DIN	mm	A
	521	43 DIN	mm	A
	2100-l_{1k}	43 DIN	mm	A
MG913/d_1-G60	2100-l_{1N}		mm	A

* Connection dimensions identical

Table A – Dimensions in mm

d_1	d_6	d_7	d_{14}	d_{16}	d_a	d_b	l_1	l_{1k}	l_{1N}	l_{1S}	l_5	l_6	l_{17}	l_{28}	l_{29}
10	17	21	11.0	24.60	19.6	13.0	53.0	32.5	40	34.0	1.5	4	7.5	6.6	9.0
12	19	23	13.5	27.80	21.6	15.0	53.0	32.5	40	34.0	1.5	4	7.5	6.6	9.0
14	21	25	17.0	30.95	24.0	18.0	54.5	35.0	40	35.5	1.5	4	9.0	6.6	10.5
15	–	–	17.0	30.95	25.0	19.0	54.5	–	–	35.5	–	–	9.0	–	10.5
16	23	27	17.0	30.95	26.5	20.0	54.5	35.0	40	35.5	1.5	4	9.0	6.6	10.5
18	27	33	20.0	34.15	29.0	22.0	54.5	37.5	45	35.5	2.0	5	9.0	7.5	10.5
20	29	35	21.5	35.70	31.5	24.5	54.5	37.5	45	35.5	2.0	5	9.0	7.5	10.5
22	31	37	23.0	37.30	33.0	27.0	54.5	37.5	45	35.5	2.0	5	9.0	7.5	10.5
24	33	39	26.5	40.50	37.0	29.0	54.5	40.0	50	35.5	2.0	5	9.0	7.5	10.5
25	34	40	26.5	40.50	38.0	30.0	54.5	40.0	50	35.5	2.0	5	9.0	7.5	10.5
28	37	43	29.5	47.65	41.0	34.0	72.0	42.5	50	45.0	2.0	5	10.5	7.5	12.0
30	39	45	32.5	50.80	43.0	36.0	72.0	42.5	50	45.0	2.0	5	10.5	7.5	12.0
32	42	48	32.5	50.80	45.0	38.0	72.0	42.5	55	45.0	2.0	5	10.5	7.5	12.0
33	42	48	36.5	54.00	46.0	39.0	72.0	42.5	55	45.0	2.0	5	10.5	7.5	12.0
35	44	50	36.5	54.00	48.0	41.0	72.0	42.5	55	45.0	2.0	5	10.5	7.5	12.0
38	49	56	39.5	57.15	52.5	44.5	72.0	45.0	55	45.0	2.0	6	10.5	9.0	12.0
40	51	58	42.5	60.35	55.5	47.5	72.0	45.0	55	45.0	2.0	6	10.5	9.0	12.0
43	54	61	46.0	63.50	58.5	50.5	83.0	45.0	60	53.0	2.0	6	10.5	9.0	12.0
45	56	63	46.0	63.50	60.5	52.5	83.0	45.0	60	53.0	2.0	6	10.5	9.0	12.0
48	59	66	49.0	66.70	64.0	56.0	83.0	45.0	60	53.0	2.0	6	10.5	9.0	12.0
50	62	70	52.0	69.85	66.0	58.0	84.5	47.5	60	54.5	2.5	6	12.0	9.5	13.5
53	65	73	55.5	73.05	69.0	61.0	84.5	47.5	70	54.5	2.5	6	12.0	11.0	13.5
55	67	75	58.5	76.20	71.0	63.0	84.5	47.5	70	54.5	2.5	6	12.0	11.0	13.5
58	70	78	61.5	79.40	76.0	66.0	84.5	52.5	70	54.5	2.5	6	12.0	11.0	13.5
60	72	80	61.5	79.40	78.0	68.0	84.5	52.5	70	54.5	2.5	6	12.0	11.0	13.5
63	75	83	65.0	82.55	82.0	71.5	84.5	52.5	70	54.5	2.5	6	12.0	11.0	13.5
65	77	85	68.0	92.10	84.0	73.5	86.0	52.5	80	65.0	2.5	6	14.5	11.0	16.0
68	81	90	71.0	95.25	87.0	76.5	86.0	52.5	80	65.0	2.5	7	14.5	11.3	16.0
70	83	92	71.0	95.25	89.0	79.0	86.0	60.0	80	65.0	2.5	7	14.5	11.3	16.0
75	88	97	77.5	101.60	95.0	85.0	89.0	60.0	80	68.0	2.5	7	14.5	11.3	16.0
80	95	105	84.0	114.30	101.5	91.5	99.0	60.0	90	76.0	3.0	7	18.5	12.0	20.0
85	100	110	87.0	117.50	107.0	97.0	99.0	60.0	90	76.0	3.0	7	18.5	14.0	20.0
90	105	115	93.5	123.85	111.5	103.0	103.0	65.0	90	79.0	3.0	7	18.5	14.0	20.0
95	110	120	96.5	127.00	117.5	108.0	103.0	65.0	90	79.0	3.0	7	18.5	14.0	20.0
100	115	125	103.0	133.35	122.5	114.0	106.0	65.0	90	82.0	3.0	7	18.5	14.0	20.0

Table B – Dimensions in inch / mm

d_1	d_1	d_{14}	d_{16}	d_a	d_b	l_1	l_{1S}	l_{17}	l_{29}
0.375"	9.53	11.0	24.60	18.8	12.5	53.0	34.0	7.5	9.0
0.500"	12.70	13.5	27.80	22.3	16.0	53.0	34.0	7.5	9.0
0.625"	15.88	17.0	30.95	26.5	20.0	54.5	35.5	9.0	10.5
0.750"	19.05	20.0	34.15	29.5	23.0	54.5	35.5	9.0	10.5
0.875"	22.23	23.0	37.30	33.0	27.0	54.5	35.5	9.0	10.5
1.000"	25.40	26.5	40.50	38.0	30.5	54.5	35.5	9.0	10.5
1.125"	28.58	29.5	47.65	41.5	34.5	72.0	45.0	10.5	12.0
1.250"	31.75	32.5	50.80	45.0	38.0	72.0	45.0	10.5	12.0
1.375"	34.93	36.5	54.00	48.0	41.0	72.0	45.0	10.5	12.0
1.500"	38.10	39.5	57.15	52.5	44.5	72.0	45.0	10.5	12.0
1.625"	41.28	42.5	60.35	57.0	48.5	72.0	45.0	10.5	12.0
1.750"	44.45	46.0	63.50	60.5	51.5	83.0	53.0	10.5	12.0
1.875"	47.63	49.0	66.70	64.0	55.0	83.0	53.0	10.5	12.0
2.000"	50.80	52.0	69.85	66.0	58.0	84.5	54.5	12.0	13.5
2.125"	53.98	55.5	73.05	71.0	61.5	84.5	54.5	12.0	13.5
2.250"	57.15	58.5	76.20	76.5	65.0	84.5	54.5	12.0	13.5
2.375"	60.33	61.5	79.40	78.5	68.5	84.5	54.5	12.0	13.5
2.500"	63.50	65.0	82.55	82.0	72.0	84.5	54.5	12.0	13.5
2.625"	66.68	68.0	92.10	84.0	75.0	86.0	65.0	14.5	16.0
2.750"	69.85	71.0	95.25	89.0	79.0	86.0	65.0	14.5	16.0
2.875"	73.03	74.5	98.45	92.5	82.0	89.0	68.0	14.5	16.0
3.000"	76.20	77.5	101.60	95.5	85.5	89.0	68.0	14.5	16.0
3.125"	79.38	80.5	111.15	101.5	91.0	99.0	76.0	18.5	20.0
3.250"	82.55	84.0	114.30	104.7	94,0	99.0	76.0	18.5	20.0
3.375"	85.73	87.0	117.50	107.0	98.0	99.0	76.0	18.5	20.0
3.500"	88.90	90.5	120.65	111.5	100.0	99.0	76.0	18.5	20.0
3.625"	92.08	93.5	123.85	114.5	104.0	103.0	79.0	18.5	20.0
3.750"	95.25	96.5	127.00	118.0	108.0	103.0	79.0	18.5	20.0
3.875"	98.43	100.0	130.20	121.0	112.0	106.0	82.0	18.5	20.0
4.000"	101.60	103.0	133.35	125.0	116.0	106.0	82.0	18.5	20.0

Table C – Dimensions in inch

d_1	d_{61}	d_{71}	d_a	d_b	l_{14}	l_{15}	l_{41}	l_{51}	l_{61}
0.375	0.625	0.875	0.740	0.492	1.125	1.500	0.313	0.050	0.250
0.500	0.750	1.000	0.878	0.630	1.125	1.500	0.313	0.050	0.250
0.625	0.937	1.250	1.043	0.787	1.281	1.718	0.406	0.050	0.344
0.750	1.062	1.375	1.161	0.905	1.281	1.718	0.406	0.050	0.344
0.875	1.187	1.500	1.299	1.063	1.343	1.781	0.406	0.050	0.344
1.000	1.312	1.625	1.496	1.200	1.437	2.000	0.437	0.050	0.375
1.125	1.437	1.750	1.634	1.358	1.500	2.062	0.437	0.050	0.375
1.250	1.563	1.875	1.772	1.496	1.500	2.062	0.437	0.050	0.375
1.375	1.687	2.000	1.890	1.614	1.562	2.124	0.437	0.050	0.375
1.500	1.813	2.125	2.067	1.752	1.562	2.124	0.437	0.050	0.375
1.625	2.000	2.375	2.244	1.909	1.875	2.500	0.500	0.050	0.437
1.750	2.125	2.500	2.382	2.028	1.875	2.500	0.500	0.050	0.437
1.875	2.250	2.625	2.520	2.165	2.000	2.625	0.500	0.050	0.437
2.000	2.375	2.750	2.598	2.283	2.000	2.625	0.500	0.050	0.437
2.125	2.375	3.000	2.795	2.421	2.249	2.937	0.562	0.050	0.500
2.250	2.437	3.125	2.992	2.559	2.249	2.937	0.562	0.050	0.500
2.375	2.563	3.250	3.071	2.697	2.375	3.062	0.562	0.050	0.500
2.500	2.687	3.375	3.228	2.834	2.375	3.062	0.562	0.050	0.500
2.625	2.812	3.375	3.307	2.953	2.562	3.375	0.625	0.100	0.562
2.750	2.937	3.500	3.504	3.110	2.562	3.375	0.625	0.100	0.562
2.875	3.062	3.750	3.642	3.228	2.687	3.500	0.625	0.100	0.562
3.000	3.187	3.875	3.760	3.366	2.687	3.500	0.625	0.100	0.562
3.125	3.312	4.000	4.000	3.583	2.968	3.906	0.781	0.100	0.656
3.250	3.437	4.125	4.122	3.700	2.968	3.906	0.781	0.100	0.656
3.375	3.562	4.250	4.213	3.858	2.968	3.906	0.781	0.100	0.656
3.500	3.687	4.375	4.390	3.937	2.968	3.906	0.781	0.100	0.656
3.625	3.812	4.500	4.508	4.095	3.093	4.031	0.781	0.100	0.656
3.750	3.937	4.625	4.646	4.252	3.093	4.031	0.781	0.100	0.656
3.875	4.062	4.750	4.764	4.409	3.218	4.156	0.781	0.100	0.656
4.000	4.187	4.875	4.921	4.567	3.218	4.156	0.781	0.100	0.656

EA560

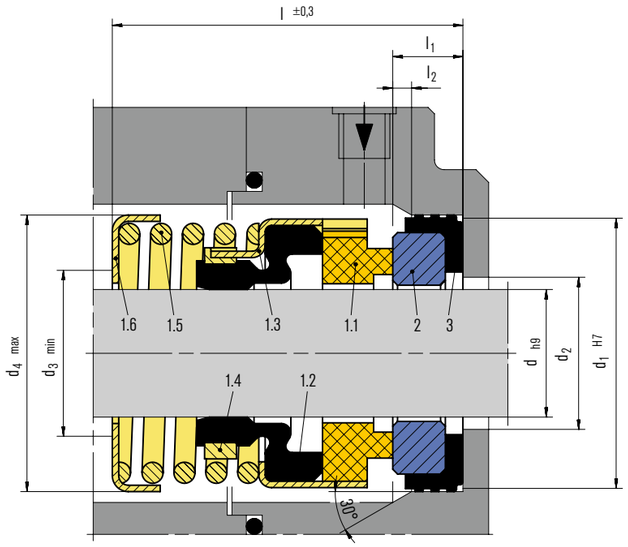

Features

- Single seal
- Loosely inserted seal face provides self-adjusting capability
- In-house manufactured sliding parts

Advantages

The EA560 is self-adjusting to shaft misalignments and deflections because of the loosely inserted seal face as well as the ability of the bellows to stretch and tighten. The length of the contact area of the bellows with the shaft is an optimum compromise between ease of assembly (less friction) and sufficient adhesive force for torque transmission. Additionally the seal fulfills very specific leakage requirements. Because the sliding parts are made in-house, a wide variety of special needs can be accommodated.

Operating range (see note on page 1)

Shaft diameter: d_1 = 8 ... 50 mm (0.375" ... 2")
Pressure: p_1 = 7 bar (102 PSI), vacuum ... 0.1 bar
Temperature: t = –20 °C ... +100 °C (–4 °F ... +212 °F)
Sliding velocity: v_g = 5 m/s (16 ft/s)
Axial movement: ±1.0 mm

Materials

Seal face: Carbon graphite resin impregnated (B), Silicon carbide (Q1, Q2)
Seat: Aluminium oxide (V), Silicon carbide (Q1, Q2)
Elastomer: NBR (P), FKM (V)
Metal parts: 1.4301 (F)

Recommended applications

- Water and waste water technology
- Food and beverage industry
- Chemical industry
- Process industry
- Glycols
- Oils
- Industrial pumps/equipment
- Submersible pumps
- Engine pumps
- Circulating pumps

Item	Description
1.1	Seal face
1.2	Bellows
1.3	Spring collar
1.4	Drive collar
1.5	Spring
1.6	Spring holder
2	Seat
3	Corner sleeve

Dimensions in mm

d	d_1	d_2	d_3	d_4	l	l_1	l_2
8	21	13	12	20.0	18	7	2
9	24	16	13	21.0	23	7	2
10	24	16	14	23.5	23	7	2
11	24	16	15	23.5	23	7	2
12	26	17	16	26.0	24	7	2
13	26	17	17	26.0	24	7	2
14	28	21	18	28.0	25	7	2
15	28	21	19	28.0	25	7	2
16	32	22	20	30.0	27	8	2
17	32	22	21	32.5	27	8	2
18	35	25	22	32.5	26	8	2
19	35	25	23	32.5	26	8	2
20	38	27	24	35.5	28	8	2
22	40	29	26	37.5	28	8	2
25	44	32	29	42.0	29	9	2
28	46	34	32	45.5	30	9	2
30	50	38	35	48.0	31	9	2
32	54	40	37	50.0	33	9	2
35	58	44	40	54.5	36	10	2
38	60	46	43	58.5	37	10	2
40	64	48	45	62.5	38	10	2
45	66	52	50	66.5	40	10	2
50	72	58	55	72.5	42	10	2

Dimensions in inch

d	d_1	d_2	d_3	d_4	l	l_1	l_2	a_2
0.375	9.525	22.225	14.3	12.7	23.5	28.6	6.4	1
0.500	12.700	25.400	17.5	15.9	26.0	28.6	6.4	1
0.625	15.875	31.750	20.6	19.1	30.0	32.5	8.7	1
0.750	19.050	34.925	23.8	22.2	32.5	32.5	8.7	1
0.875	22.225	38.100	27.0	25.4	37.5	34.1	8.7	1
1.000	25.400	41.275	30.2	28.6	44.0	36.5	9.5	1
1.125	28.575	44.450	33.3	31.8	48.0	38.1	9.5	1
1.250	31.750	47.625	36.5	34.9	50.0	38.1	9.5	1
1.375	34.925	50.800	39.7	38.1	54.5	39.7	9.5	1
1.500	38.100	53.975	42.9	41.3	58.5	39.7	9.5	1
1.625	41.275	60.325	46.0	44.5	64.0	47.6	11.1	1
1.750	44.450	63.500	49.2	47.6	67.0	47.6	11.1	1
1.875	47.625	66.675	52.4	50.8	71.0	50.8	11.1	1
2.000	50.800	69.850	55.6	54.0	73.5	50.8	11.1	1

ED560

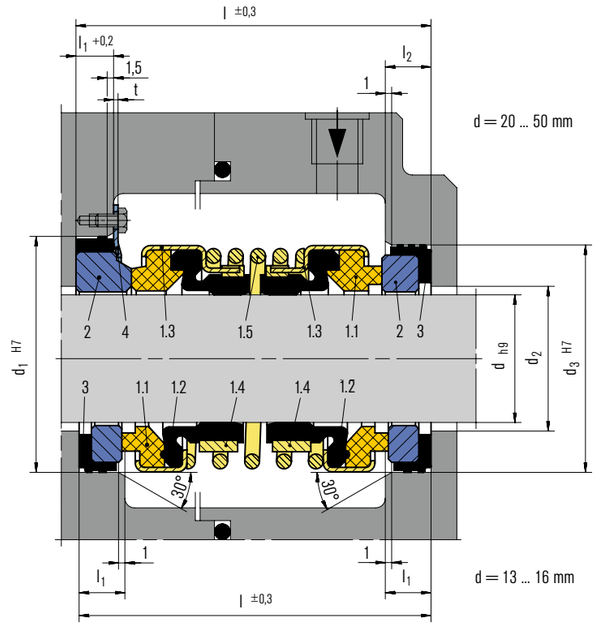

Features

- Dual seal
- Good chemical resistance and ability to handle solids
- In-house manufactured sliding parts

Advantages

The ED560 is a dual seal in a back-to-back arrangement with an EA560 base. Therefore, the seal combines the advantages of the EA560 with the advantages of a dual seal.

Operating range (see note on page 1)

Shaft diameter: d_1 = 13 ... 50 mm (0.51" ... 1.96")
Pressure: p_1 = d ≤ 19 mm: 2 bar (29 PSI),
d ≥ 20 mm: 3 bar (44 PSI),
vacuum ... 0.1 bar (1.45 PSI)
Temperature: t = –20 °C ... +70 °C (–4 °F ... 158 °F)
Sliding velocity: v_g = 5 m/s (16 ft/s)
Axial movement: ± 1.0 mm

Materials

Seal face: Carbon graphite resin impregnated (B), Silicon carbide (Q1, Q2)
Seat: Aluminium oxide (V), Silicon carbide (Q1, Q2)
Elastomer: NBR (P), FKM (V)
Metal parts: 1.4301 (F)

Recommended applications

- Water and waste water technology
- Food and beverage industry
- Chemical industry
- Process industry
- Glycols
- Oils
- Industrial pumps/equipment
- Submersible pumps
- Engine pumps
- Circulating pumps

Item	Description
1.1	Seal face
1.2	Bellows
1.3	Spring collar
1.4	Drive collar
1.5	Spring
2	Seat
3	Corner sleeve
4	Washer

Dimensions in mm

d	d_1	d_2	d_3	d_4	d_5	l	l_1	l_2	l_3
13	25	17	25	–	–	36	5	–	–
14	30	20	30	–	–	36	5	–	–
15	30	20	30	–	–	36	5	–	–
16	30	20	30	–	–	36	5	–	–
20	44	23	38	60	72	49	7	7	1.0
25	50	28	44	60	72	51	9	7	1.0
30	57	33	50	70	82	59	9	8	1.0
35	65	38	58	80	94	61	9	9	1.2
40	70	43	64	85	100	64.5	11	9	1.2
45	70	48	66	90	105	65	10	9	1.0
50	80	53	72	95	109	69.5	10	9	1.2

EA100

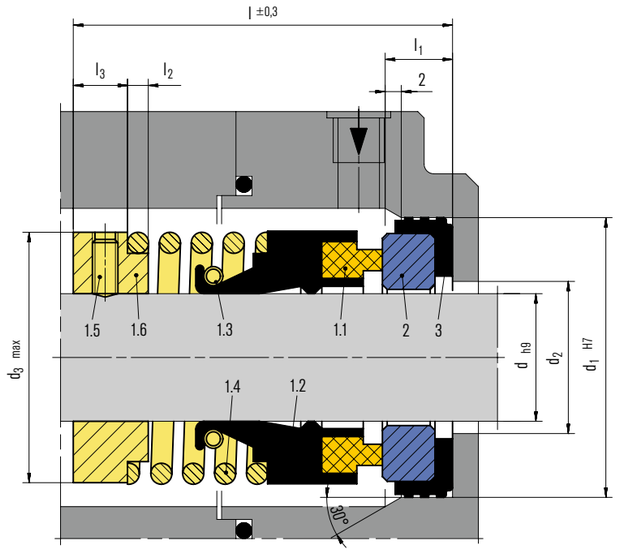

Features

- Single seal
- In-house manufactured carbon seal faces
- Three different impeller connection available

Advantages

The EA100 is the specialist for low duty applications and one of our historic and bestselling seals in this sector. The seal is easy to handle and quick to install. An incorporated garter spring assures a good grip of the bellows on the shaft and enhances satisfactory sealing performance. With the ability of the bellows to stretch and tighten, the EA100 is insensitive to shaft movements.
The seal design is available in 3 types, each with a different impeller connection: EA102 is with a collar. EA103 is without a collar. EA104 provides a different coil spring installation. More information on EA103 and EA104 is available on request.

Operating range (see note on page 1)

Shaft diameter: d_1 = 8 ... 20 mm (0.32" ... 0.78")
Pressure: p_1 = 5 bar (73 PSI), vacuum ... 0.1 bar (1.45 PSI)
Temperature: t = –20 °C ... +100 °C (–4 °F ... +212 °F)
Sliding velocity: v_g = 5 m/s (16 ft/s)
Axial movement: ±2.0 mm

Materials

Seal face: Carbon graphite resin impregnated (B)
Seat: Aluminium oxide (V)
Elastomer: NBR (P)
Metal parts: 1.4301 (F)

Recommended applications

- Water and waste waster technology
- Drinking water
- Hot water circulation pumps
- Industrial pumps/equipment
- Domestic pumps
- Low duty water pumps
- Pumps for water & under floor
- heating systems
- Pumps for solar systems

Item	Description
1.1	Seal face
1.2	Bellows
1.3	Garter spring
1.4	Spring
1.5	Set screw
1.6	Collar
2	Seat
3	Corner sleeve

Product variants

EA102
As EA100 but with a collar.

EA103
As EA100 but without a collar. Please inquire.

EA104
As EA100 but with different coil spring installations. Please inquire.

Dimensions in mm

d	d_1	d_2	d_3	l	l_1	l_2	l_3
8	21	13	18.5	26	7	2	8
9	24	16	22.5	31	7	2	8
10	24	16	22.5	31	7	2	8
11	24	16	22.5	31	7	2	8
12	26	17	24.5	32	7	2	8
13	26	17	24.5	32	7	2	9
14	28	21	28.5	34	7	3	9
15	28	21	28.5	34	7	3	9
16	32	22	30.5	26	8	3	9
17	32	22	30.5	36	8	3	9
18	35	25	33.5	39	8	3	10
19	35	25	33.5	39	8	3	10
20	38	27	35.5	41	8	3	10

EH700

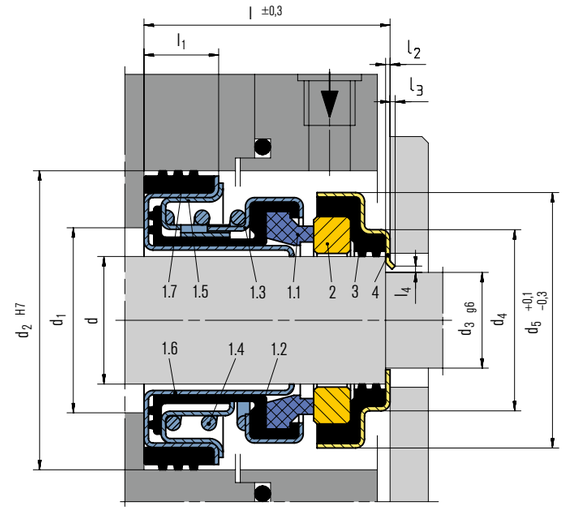

Features

- Single seal
- Stationary spring-loaded unit enables operation in high-range loads area
- Balanced
- In-house manufactured carbon seal faces

Advantages

The seal for stationary applications. The EH700 is based on a unique stationary spring loaded unit that enables the seal to operate under high speed and high pressure. An additional advantage of the seal is the balanced design, which ensures good sealing performance in high-load conditions.

Operating range (see note on page 1)

Shaft diameter: d_1 = 15 ... 35 mm
Pressure: p_1 = 15 bar (218 PSI), vacuum ... 0.1 bar
Temperature: t = –20 °C ... +100 °C (–4 °F ... +212 °F)
Sliding velocity: v_g = 10 m/s (33 ft/s)
Axial movement: ±1.0 mm

Materials

Seal face: Carbon graphite resin impregnated (B)
Seat: Aluminium oxide (V, V1), Silicon carbide (Q1, Q2)
Secondary seals: NBR (P), FKM (V)
Metal parts: 1.4301 (F)

Recommended applications

- Water and waste water technology
- Food and beverage industry
- Water and waste water
- Glycols
- Industrial pumps
- Engine pumps
- Skyscraper water supply pumps

Item	Description
1.1	Seal face
1.2	Bellows
1.3	Spring collar
1.4	Spring
1.5	Spring holder
1.6	Cartridge
1.7	Seat ring
2	Seat
3	Corner sleeve
4	Case

Dimensions in mm

d	d_1	d_2	d_3	d_4	d_5	l	l_1	l_2	l_3	l_4	l_5
15	22	41	12	22	34	29.5	9.5	0.6	–	–	–
20	30	45	12	27.2	45	31	11	0.6	2	1	3.4
25	35	52	22	33.6	52	37	11.5	0.8	2.5	1	4.2
35	45	66	32	43.6	66	41.6	12.5	0.8	4	1	5.2

BT-AR

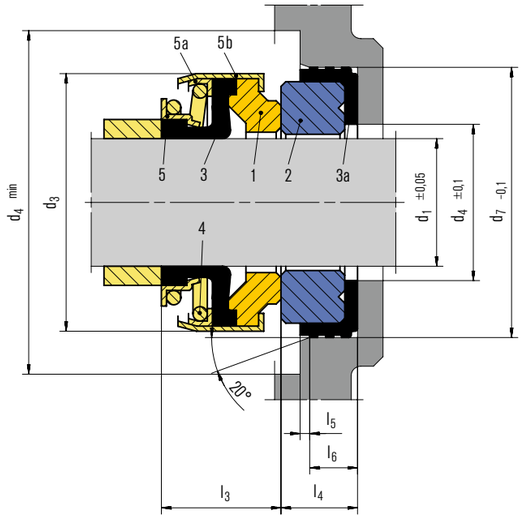

Features

- Single and dual seal
- Short axial installation length
- Protection of the shaft along the whole length of the seal
- Material approvals available

Advantages

The BT-AR is the "small seal for large pump series", a mechanical seal for mass produced water pumps. Its key feature is the short axial installation length. This allows pumps to be built economically. The compact design of BT-AR seals assures reliable and durable sealing. The elasticity of the bellows design makes it possible to cope with robust operating conditions.

Operating range (see note on page 1)

Shaft diameter: d_1 = 6 ... 60 mm (0.24" ... 2.4")
Pressure: p_1* = 6 bar (87 PSI),
vacuum ... 0.5 bar
(up to 1 bar with seat locking)
Temperature: t* = −20 °C ... +120 °C (−4 °F ... +248 °F)
Sliding velocity: v_g = 10 m/s (33 ft/s)
* Depending on medium, size and material

Materials

Seal face: Carbon graphite antimony impregnated (A),
Carbon graphite resin impregnated (B, B3),
Silicon carbide (Q1, Q6), Tungsten carbide (U)*,
PTFE glass fiber reinforced (Y)
Seat: Steatite (X), Aluminium oxide (V, V1),
Silicon carbide (Q1, Q6), Tungsten carbide (U)*
Elastomer: NBR (P), EPDM (E), FKM (V), HNBR (X4)
Metal parts: 1.4571 (G), 1.4301 (F), 1.4401 (G),
1.4057 (F1)*
*) Only for BT-AR3

Standards and approvals

- Material approvals: KTW, W270, ACS, WRAS, NSF61, FDA.

Recommended applications

- Water and waste water technology
- Food and beverage industry
- Water and waste water
- Beverages and foodstuffs
- Domestic and garden pumps
- Whirlpool and swimming pool pumps
- Dishwasher pumps
- Submersible motors/pumps
- Water pumps

Item	Description
1	Seal face
2	Seat
3	Bellows
3a	Corner sleeve
4	Spring
5	Drive collar
5a	Locking ring
5b	Collar

Product variant

BT-AR3
Seal faces made of tungsten carbide (U). Elastomers and diameter range same as BT-AR. The BT-AR3 is the right choice when the seal has to be used in high duty applications or where the seal faces could be damaged by abrasives (waste water).

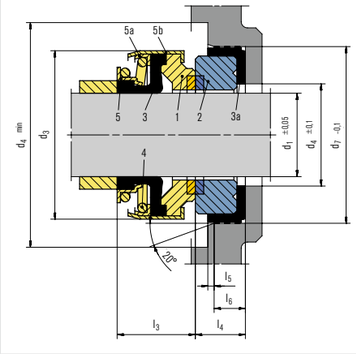

Dimensions in mm

d_1	d_3	d_4	d_6	d_7	l_3	toll	l_4	l_5	l_6	
6	18	23	8	22.0	8.0	+0.5/0	4.0	0.5	3.5	
8S	20	23	10	22.0	11.0	+0.5/0	4.0	0.5	3.5	
8	24	27	10	26.0	11.0	+0.5/0	8.0	1.0	6	*
3/8"	24	27	12	25.4	11.0	+0.5/0	5.5	0.5	4.5	
3/8"	24	27	12	25.4	11.0	+0.5/0	7.5	1.0	5.5	
10	24	27	12	26.0	11.0	+0.5/0	8.0	1.0	6	*
11	24	27	13	26.0	11.0	+0.5/0	8.0	1.0	6	*
12C	24	27	14	26.0	11.0	+0.5/0	8.0	1.0	6	*
12	24	27	14	26.0	12.8	+0.7/0	8.0	1.0	6	*
1/2"	24	27	15	25.4	12.8	+0.7/0	7.5	1.0	5.5	
13	24	27	15	26.0	12.8	+0.7/0	8.0	1.0	6.0	*
14S	28	30	18	28.5	12.8	+0.7/0	7.5	1.0	5.5	
14L	28	30	18	28.5	15.3	±0.8	7.5	1.0	5.5	
14	32	35	16	29.5	12.8	+0.7/0	8.0	1.0	6.0	
15	32	35	17	29.5	12.8	+0.7/0	8.0	1.0	6.0	
16R	32	35	18	29.5	12.8	+0.7/0	8.0	1.0	6.0	
16	39	43	18	38.0	12.8	+0.7/0	8.0	1.0	6.0	
16	39	43	18	42.0	12.8	+0.7/0	8.0	1.0	6.0	
17	39	43	19	42.0	12.8	+0.7/0	8.0	1.0	6.0	
18	39	43	20	42.0	12.8	+0.7/0	8.0	1.0	6.0	
19	39	43	21	42.0	12.8	+0.7/0	8.0	1.0	6.0	
20	39	43	22	42.0	12.8	+0.7/0	8.0	1.0	6.0	
20S	42	47	22	45.0	12.8	+0.7/0	10.0	1.0	8.0	
22	42	47	24	45.0	12.8	+0.7/0	10.0	1.0	8.0	
23	47	52	25	50.0	13.5	+1/0	10.0	1.0	8.0	
24	47	52	26	50.0	13.5	+1/0	10.0	1.0	8.0	
25R	42	52	27	50.0	13.5	+1/0	10.0	1.0	8.0	
25	47	52	27	50.0	13.5	+1/0	10.0	1.0	8.0	
26	47	52	29	50.0	13.5	+1/0	10.0	1.0	8.0	
27	47	52	30	50.0	13.5	+1/0	10.0	1.0	8.0	
28	54	60	31	57.0	15.0	+1/0	10.0	1.0	8.0	
30	54	60	33	57.0	15.0	+1/0	10.0	1.0	8.0	
32	54	60	35	57.0	15.0	+1/0	10.0	1.0	8.0	
35	60	70	38	63.0	16.0	+1/0	10.0	1.0	8.0	
38	65	75	41	68.0	18.0	+1/0	12.0	2.0	9.0	
40	65	75	43	68.0	18.0	+1/0	12.0	2.0	9.0	
45	70	80	48	73.0	20.0	+1/0	12.0	2.0	9.0	
50	85	95	53	88.0	23.0	+1/0	15.0	2.0	12.0	
60	105	115	63	110.0	30.0	+1/0	15.0	2.0	12.0	

* Alternative seat l_4 = 5.5, l_5 = 0.5, l_6 = 4.5

BT-A2

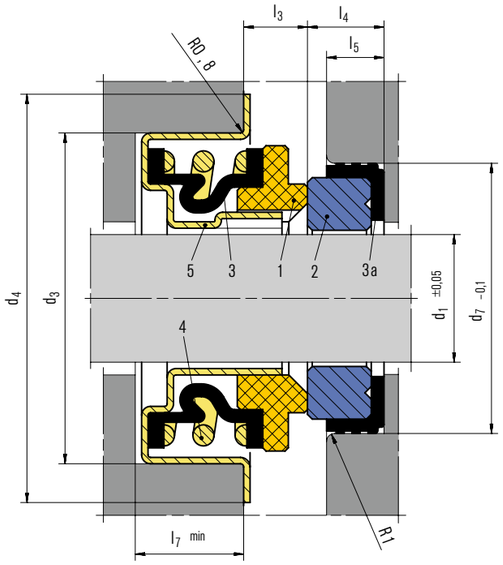

Features

- Unbalanced
- Single spring
- Independent of direction of rotation
- Elastomer bellows

Advantages

Stationary mechanical seal in inch dimensions. Worldwide spread, this type of mechanical seal has reached an unsurpassed quality level. The BT-A2 features all carbon or high quality resin impregnated carbon, aluminium oxide 96 %. Static air pressure test on 100 % production. Excellent solution for swimming pool pumps. The BT-A2 is suitable for circulation massage pumps for whirlpools and clean water pumps.

Operating range (see note on page 1)

Shaft diameter: d_1 = 1/2", 5/8", 3/4"
Pressure: p = 4 bar (58 PSI)
Temperature: t = –20 °C ... +90 °C (–4 °F ... +194 °F)
Sliding velocity: v_g = 10 m/s (33 ft/s)
Operating limits depend on p·v_g factor

Materials

Seal face: Carbon graphite resin impregnated (B, B3)
Seat: Aluminium oxide (V1)
Elastomer: NBR (P)
Metal parts: CrNi-steel (F), CrNiMo-steel (G)
Standard combination: BV1PFF, B3V1PGG

Recommended applications

- Water and waste water technology
- Building services engineering
- Clean water
- Swimming pool pumps
- Whirlpool pumps

Item	Description
1	Seal face
2	Seat
3	Bellows
3a	Corner sleeve
4	Compression spring
5	Housing

Dimensions in mm

d_1*	d_1	d_3	toll	d_4	d_7	l_3	toll	l_4	l_6	l_7
1/2"	12.70	28.55	+0.02	35.00	25.40	5.2	+0.5	8.0	6.0	10
5/8"	15.88	36.45	+0.02	41.00	31.75	6.8	+0.5	10.3	8.5	10
3/4"	19.05	40.00	+0.03	44.00	34.95	6.5	+0.5	10.3	8.0	11

* Dimensions in inch

BT-PN

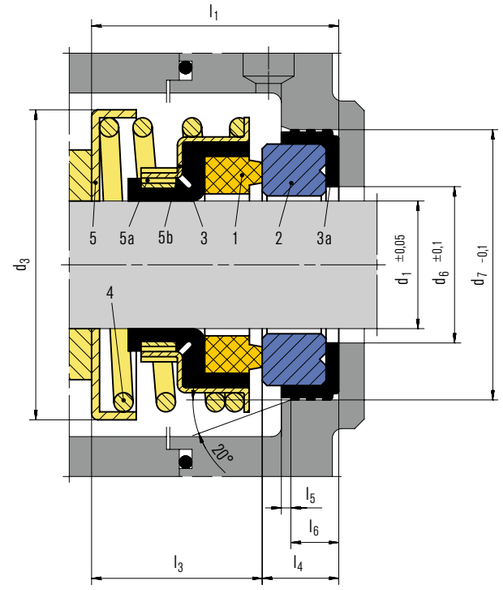

Features

- Single and dual seal
- Short axial installation length
- Material approvals available

Advantages

The small seal for increased pressure. The BT-PN is a mechanical seal with a simple but effective design for mass-produced pumps. The special spring arrangement allows a short axial installation length. This advantage is combined with an increased working pressure capability and because the spring is free from torque transmission.

Operating range (see note on page 1)

Shaft diameter: d_1 = 8 ... 30 mm
Pressure: p_1* = 12 bar (170 PSI)
Temperature: t* = –20 °C ... +120 °C (–4 °C ... +248 °F)
Sliding velocity: v_g = 10 m/s (33 ft/s)
* Depending on medium, size and material

Materials

Seal face: Carbon graphite resin impregnated (B), Carbon graphite solid (B3), Silicon carbide (Q1, Q6)
Seat: Steatite (X), Aluminium oxide (V, V1), Silicon carbide (Q1, Q6)
Elastomer: NBR (P), EPDM (E), FKM (V)
Metal parts: 1.4571 (G), 1.4301 (F), 1.4401 (G)

Standards and approvals

- Material approvals: KTW, W270, ACS, WRAS, NSF61, FDA.

Notes

The BT-PN can also be used as a dual seal in tandem or back-to-back arrangement. Installation proposals can be supplied on request.

Recommended applications

- Water and waste water technology
- Food and beverage industry
- Water and waste water
- Beverages and food stuffs
- Submersible motors up to 4 inches
- Submersible pumps, back-to-back installation
- Peripheral pumps for industrial applications
- Domestic and garden pumps
- Coffee machines
- Water pumps

Item	Description
1	Seal face
2	Seat
3	Bellows
3a	Corner sleeve
4	Spring
5	Ring
5a	Drive collar
5b	Collar

Dimensions in mm

d_1	d_3	d_6	d_7	l_1	l_3	toll	l_4	l_5	l_6	
8.00	23	10	22.00	17.50	13.50	±1	4.0	0.5	3.5	
8.00	23	10	25.40	19.00	13.50	±1	5.5	0.5	4.5	
3/8"	23	12	25.40	19.00	13.50	±1	5.5	0.5	4.5	
10.00	23	12	25.40	19.00	13.50	±1	5.5	0.5	4.5	
13.00	32	17	29.50	20.80	12.80	+0.7/0	8.0	1.0	6.0	
14.00	32	17	29.50	20.80	12.80	+0.7/0	8.0	1.0	6.0	
15.00	32	17	29.50	20.80	12.80	+0.7/0	8.0	1.0	6.0	
16.00	32	17	29.50	20.80	12.80	+0.7/0	8.0	1.0	6.0	
16.00	32	17	29.50	24.30	16.30	+0.7/0	8.0	1.0	6.0	4" submersible motor
20.00	44	22	42.00	22.00	14.00	±1	8.0	1.0	6.0	
25.00	50	27	42.00	24.00	17.00	±1	7.0	1.0	5.0	
30.00	60	33	52.00	32.00	22.00	±1	10.0	1.0	6.0	

MBS100

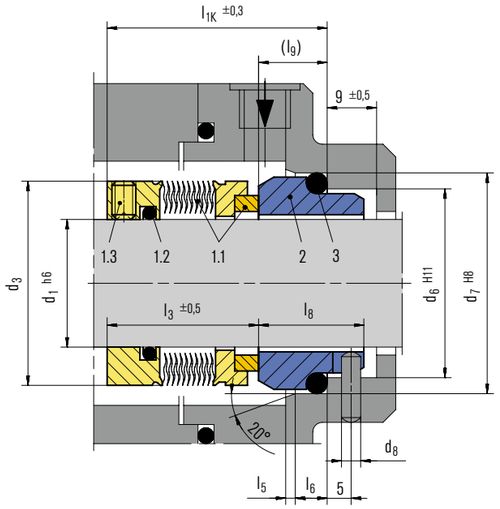

Features

- For unstepped shafts
- Rotating bellows
- Single seal
- Balanced
- Independent of direction of rotation

Advantages

- For extreme temperature ranges
- No dynamically loaded O-Ring
- Self cleaning effect

Operating range (see note on page 1)

Shaft diameter: d_1 = 20 ... 100 mm (0.79" ... 4")
Pressure: p_1 = ... 25 (16*) bar (363 (232*) PSI)
Temperature: t = –40 °C ... +220 (160*) °C
(–40 °F ... 428 (320*) °F)
Sliding velocity: v_g = 20 m/s (66 ft/s)
* Operating limits for material combination Q1/Q1

Materials

Seal face: Carbon graphite (A), Silicon carbide (Q1)
Seat: Silicon carbide (Q12)
Bellows: Inconel® 625 (T3)
Secondary seals: FKM (V)
Metal parts: Duplex (G1)

Standards and approvals

- EN 12756

Recommended applications

- Refining technology
- Power plant technology
- Chemical industry
- Hot media
- Cold media
- Highly viscous media
- Pumps
- Special rotating equipment

Item	Description
1.1	Seal face with bellows unit
1.2	O-Ring
1.3	Set screw
2	Seat (G9)
3	O-Ring

Dimensions in mm

d_1	d_3	d_6	d_7	d_8	l_{1k}	l_3	l_5	l_6	l_8	l_9
20	33.3	29	35	3	37.5	30.5	2.0	5	15.0	7.0
22	36.5	31	37	3	37.5	30.5	2.0	5	15.0	7.0
24	39.0	33	39	3	40.0	28.5	2.0	5	19.5	11.5
25	39.0	34	40	3	40.0	28.5	2.0	5	19.5	11.5
28	42.0	37	43	3	42.5	31.0	2.0	5	19.5	11.5
30	44.0	39	45	3	42.5	31.0	2.0	5	19.5	11.5
32	46.0	42	48	3	42.5	31.0	2.0	5	19.5	11.5
33	47.0	42	48	3	42.5	31.0	2.0	5	19.5	11.5
35	49.2	44	50	3	42.5	31.0	2.0	5	19.5	11.5
38	52.4	49	56	4	45.0	31.0	2.0	6	22.0	14.0
40	55.6	51	58	4	45.0	31.0	2.0	6	22.0	14.0
43	58.7	54	61	4	45.0	31.0	2.0	6	22.0	14.0
45	58.7	56	63	4	45.0	31.0	2.0	6	22.0	14.0
48	61.9	59	66	4	45.0	31.0	2.0	6	22.0	14.0
50	65.1	62	70	4	47.5	32.5	2.5	6	23.0	15.0
53	68.3	65	73	4	47.5	32.5	2.5	6	23.0	15.0
55	69.7	67	75	4	47.5	32.5	2.5	6	23.0	15.0
58	74.6	70	78	4	52.5	37.5	2.5	6	23.0	15.0
60	74.6	72	80	4	52.5	37.5	2.5	6	23.0	15.0
65	84.1	77	85	4	52.5	37.5	2.5	6	23.0	15.0
70	87.3	83	92	4	60.0	42.0	2.5	7	26.0	18.0
75	95.3	88	97	4	60.0	42.0	2.5	7	26.0	18.0
80	98.4	95	105	4	60.0	41.8	3.0	7	26.2	18.2
85	104.8	100	110	4	60.0	41.8	3.0	7	26.2	18.2
90	108.0	105	115	4	65.0	46.8	3.0	7	26.2	18.2
95	114.3	110	120	4	65.0	47.8	3.0	7	25.2	17.2
100	120.7	115	125	4	65.0	47.8	3.0	7	25.2	17.2

MFL85N

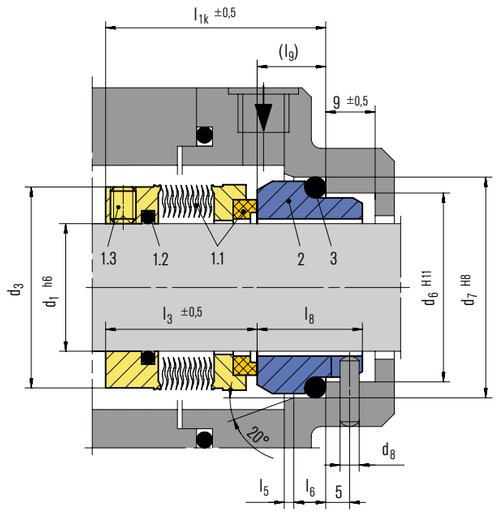

Features

- For unstepped shafts
- Rotating bellows
- Single seal
- Balanced
- Independent of direction of rotation
- Metal bellows

Advantages

- For extreme temperature ranges
- No dynamically loaded O-Ring
- Self cleaning effect
- Short installation length possible
- Pumping screw for highly viscous media available (dependant on direction of rotation).

Operating range (see note on page 1)

Shaft diameter: d_1 = 16 ... 100 mm (0.63" ... 4")
Externally pressurized: p_1 = ... 25 bar (363 PSI)
Internally pressurized:
p_1 < 120 °C (248 °F) 10 bar (145 PSI)
p_1 < 220 °C (428 °F) 5 bar (72 PSI)
Temperature: t = –40 °C ... +220 °C (–40 °F ... +428 °F), stationary seat lock necessary.
Sliding velocity: v_g = 20 m/s (66 ft/s)

Materials

Seal face: Carbon graphite antimony impregnated (A), Silicon carbide (Q12)
Seat: Silicon carbide (Q1)
Bellows: Inconel® 718 hardened (M6), Hastelloy® C-276 (M5)
Metal parts: CrNiMo steel (G), Duplex (G1), Hastelloy® C-4 (M)

Standards and approvals

- EN 12756

Recommended applications

- Refining technology
- Power plant technology
- Chemical industry
- Hot media
- Cold media
- Highly viscous media
- Pumps
- Special rotating equipment

Item	Part no. to DIN 24250	Description
1.1	472/481	Seal face with bellows unit
1.2	412.1	O-Ring
1.3	904	Set screw
2	475	Seat (G9)
3	412.2	O-Ring

Product variants

MFL90N
Shaft diameter: d_1 = 20 ... 100 mm (0.79" ... 4")
Internally pressurized: p_1 = ... 16 bar (232 PSI), stationary seat lock necessary.
Externally pressurized:
p_1 10 bar (145 PSI),
Temperature: t = –40 °C ... +220 °C (–40 °F ... +428 °F)
Sliding velocity: v_g = 20 m/s (66 ft/s)

MFL85P/MFL90P
Version with pumping ring. Dependent on direction of rotation. Can be retrofitted.

MFL85F
Dimensions, items and description as for MFL85N, but with pumping screw (item no. 1.4).
Dependent on direction of rotation!
The pumping screw can be retrofitted.

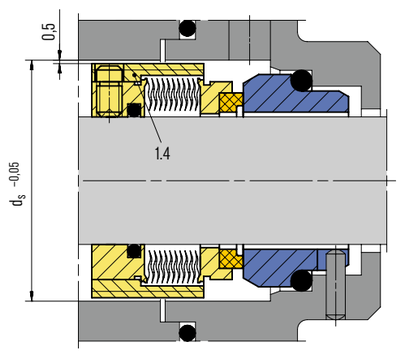

MFL85F

Seat alternative

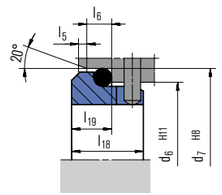

G16
(l_{1k} shorter than specified by EN 12756)

Dimensions in mm

d_1	d_3	d_6	d_7	d_8	d_s	l_{1k}	l_3	l_5	l_6	l_8	l_9	l_{18}	l_{19}	b	s
16	30.0	23	27	3	38	42.5*)	32.5	1.5	4	17.5	10.0	–	–	1.6	9.0
18	32.0	27	33	3	39	42.0	30.5	2.0	5	14.0	11.5	15.0	7.0	1.6	10.0
20	33.5	29	35	3	41	42.0	30.5	2.0	5	14.0	11.5	15.0	7.0	1.6	10.0
22	36.5	31	37	3	44	42.0	30.5	2.0	5	14.0	11.5	15.0	7.0	1.6	10.0
24	39.0	33	39	3	47	40.0	28.5	2.0	5	19.5	11.5	15.0	7.0	1.6	8.2
25	39.6	34	40	3	48	40.0	28.5	2.0	5	19.5	11.5	15.0	7.0	1.6	8.5
28	42.8	37	43	3	51	42.5	31.0	2.0	5	19.5	11.5	15.0	7.0	1.6	9.0
30	45.0	39	45	3	53	42.5	31.0	2.0	5	19.5	11.5	15.0	7.0	1.6	8.5
32	46.0	42	48	3	55	42.5	31.0	2.0	5	19.5	11.5	15.0	7.0	1.6	9.2
33	48.0	42	48	3	56	42.5	31.0	2.0	5	19.5	11.5	15.0	7.0	1.6	9.2
35	49.2	44	50	3	58	42.5	31.0	2.0	5	19.5	11.5	15.0	7.0	1.6	9.5
38	52.3	49	56	4	61	45.0	31.0	2.0	6	22.0	14.0	16.0	8.0	1.6	9.2
40	55.5	51	58	4	64	45.0	31.0	2.0	6	22.0	14.0	16.0	8.0	1.6	9.2
43	57.5	54	61	4	67	45.0	31.0	2.0	6	22.0	14.0	16.0	8.0	1.6	9.2
45	58.7	56	63	4	69	45.0	31.0	2.0	6	22.0	14.0	16.0	8.0	1.6	9.5
48	61.9	59	66	4	72	45.0	31.0	2.0	6	22.0	14.0	16.0	8.0	1.6	9.2
50	65.0	62	70	4	74	47.5	32.5	2.5	6	23.0	15.0	17.0	9.5	1.6	10.5
53	68.2	65	73	4	77	47.5	32.5	2.5	6	23.0	15.0	17.0	9.5	1.6	10.5
55	70.0	67	75	4	80	47.5	32.5	2.5	6	23.0	15.0	17.0	9.5	1.6	10.0
58	71.7	70	78	4	83	52.5	37.5	2.5	6	23.0	15.0	18.0	10.5	3.0	14.0
60	74.6	72	80	4	85	52.5	37.5	2.5	6	23.0	15.0	18.0	10.5	3.0	14.0
63	79.0	75	83	4	88	52.5	37.5	2.5	6	23.0	15.0	18.0	10.5	3.0	14.0
65	84.1	77	85	4	95	52.5	37.5	2.5	6	23.0	15.0	18.0	10.5	3.0	14.0
68	87.3	81	90	4	96	52.5	34.5	2.5	7	26.0	18.0	18.5	11.0	1.6	10.0
70	87.3	83	92	4	96	60.0	42.0	2.5	7	26.0	18.0	19.0	11.5	3.0	17.0
75	95.0	88	97	4	104	60.0	42.0	2.5	7	26.0	18.0	19.0	11.5	3.0	16.0
80	98.4	95	105	4	109	60.0	41.8	3.0	7	26.2	18.2	19.0	11.5	3.0	16.0
85	104.7	100	110	4	114	60.0	41.8	3.0	7	26.2	18.2	19.0	11.5	3.0	16.0
90	111.0	105	115	4	119	65.0	46.8	3.0	7	26.2	18.2	20.5	13.0	3.0	21.0
95	114.0	110	120	4	124	65.0	47.8	3.0	7	25.2	17.2	20.5	13.0	3.0	21.0
100	117.4	115	125	4	129	65.0	47.8	3.0	7	25.2	17.2	20.5	13.0	3.0	20.0

*) Installation length is longer than l_{1k} specified by EN 12756

MFLWT

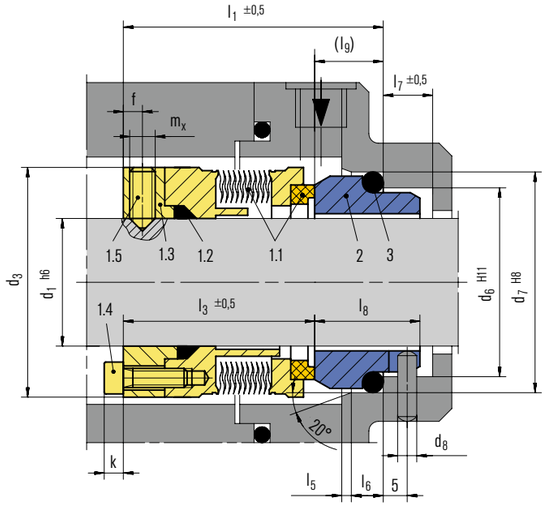

Features

- For unstepped shafts
- Rotating bellows
- Single seal
- Balanced
- Independent of direction of rotation
- Metal bellows

Advantages

- For extreme high temperature ranges
- No dynamically loaded O-Ring
- Self cleaning effect
- Short installation length possible
- Pumping screw for highly viscous media available (dependent on direction of rotation).

Operating range (see note on page 1)

Shaft diameter: d_1 = 16 ... 150 mm (0.64" ... 6")
Externally pressurized: p_1 = ... 25 bar (363 PSI)
Internally pressurized:
p_1 < 120 °C (248 °F) 10 bar (145 PSI)
p_1 < 220 °C (428 °F) 5 bar (73 PSI)
p_1 < 400 °C (752 °F) 3 bar (44 PSI)
Stationary seat lock necessary
Temperature: t = –20 °C ... +400 °C (–4 °F ... +752 °F)
Sliding velocity: v_g = 20 m/s (66 ft/s)

Materials

	Item	Part no. to DIN 24250	Description
Seal face: Carbon graphite antimony impregnated (A), Silicon carbide (Q12)	1.1	472/481	Seal face with bellows unit
Seat: Silicon carbide (Q1)	1.2	410	Sealing ring
Bellows: Inconel® 718 hardened (M6),	1.3	474	Drive collar
Hastelloy® C-276 (M5)	1.4		Socket head screw
Metal parts: CrNiMo steel (G), Duplex (G1),	1.5	904	Set screw
Carpenter® 42 (T4), Hastelloy® C-4 (M)	2	475	Seat
	3	412	Sealing ring

Recommended applications

- Refining technology
- Power plant technology
- Chemical industry
- Hot media
- Highly viscous media
- Pumps
- Special rotating equipment

Product variant

MFLWT90
Shaft diameter: d_1 = 16 ... 150 mm (0.64" ... 6")
Internally pressurized: p_1 = ... 16 bar (232 PSI)
Externally pressurized: p_1 = 10 bar (145 PSI)
Temperature: t = –20 °C ... +400 °C (–4 °F ... +752 °F)
stationary seat lock necessary
Sliding velocity: v_g = 20 m/s (66 ft/s)

Dimensions in mm

d_1	d_3	d_6	d_7	d_8	l_1	l_3	l_5	l_6	l_7	l_8	l_9	f	k	m_x
16	38	29.0	35.0	3	58.0	46.5	2.0	5	9	19.5	11.5	5	5	M5
18	40	31.0	37.0	3	58.0	46.5	2.0	5	9	19.5	11.5	5	5	M5
20	42	34.0	40.0	3	58.0	46.5	2.0	5	9	19.5	11.5	5	5	M5
22	44	37.0	43.0	3	58.0	46.5	2.0	5	9	19.5	11.5	5	5	M5
24	46	37.0	43.0	3	58.0	46.5	2.0	5	9	19.5	11.5	5	5	M5
25	47	39.0	45.0	3	58.0	46.5	2.0	5	9	19.5	11.5	5	5	M5
28	50	42.0	48.0	3	58.0	46.5	2.0	5	9	19.5	11.5	5	5	M6
30	52	44.0	50.0	3	58.0	46.5	2.0	5	9	19.5	11.5	5	5	M6
32	54	49.0	56.0	4	60.5	46.5	2.0	6	9	22.0	14.0	5	5	M6
33	55	49.0	56.0	4	60.5	46.5	2.0	6	9	22.0	14.0	5	5	M6
35	57	51.0	58.0	4	60.5	46.5	2.0	6	9	22.0	14.0	5	5	M6
38	60	54.0	61.0	4	60.5	46.5	2.0	6	9	22.0	14.0	5	5	M6
40	66	56.0	63.0	4	61.5	47.5	2.0	6	9	22.0	14.0	5	6	M6
43	69	59.0	66.0	4	61.5	47.5	2.0	6	9	22.0	14.0	5	6	M6
45	71	62.0	70.0	4	62.5	47.5	2.5	6	9	23.0	15.0	5	6	M6
48	74	65.0	73.0	4	62.5	47.5	2.5	6	9	23.0	15.0	5	6	M6
50	76	67.0	75.0	4	62.5	47.5	2.5	6	9	23.0	15.0	5	6	M6
53	79	70.0	78.0	4	62.5	47.5	2.5	6	9	23.0	15.0	5	6	M6
55	81	72.0	80.0	4	62.5	47.5	2.5	6	9	23.0	15.0	5	6	M6
58	85	75.0	83.0	4	68.0	53.0	2.5	6	9	23.0	15.0	5	6	M6
60	87	77.0	85.0	4	68.0	53.0	2.5	6	9	23.0	15.0	6	6	M8
63	90	81.0	90.0	4	71.0	53.0	2.5	7	9	26.0	18.0	6	6	M8
65	92	83.0	92.0	4	71.0	53.0	2.5	7	9	26.0	18.0	6	6	M8
68	95	88.0	97.0	4	71.0	53.0	2.5	7	9	26.0	18.0	6	6	M8
70	97	88.0	97.0	4	71.0	53.0	2.5	7	9	26.0	18.0	6	6	M8
75	102	95.0	105.0	4	71.0	52.8	3.0	7	9	26.2	18.2	6	6	M8
80	107	100.0	110.0	4	71.0	52.8	3.0	7	9	26.2	18.2	6	6	M8
85	112	105.0	115.0	4	71.0	52.8	3.0	7	9	26.2	18.2	6	6	M8
90	117	110.0	120.0	4	71.0	53.8	3.0	7	9	25.2	17.2	6	6	M8
95	122	115.0	125.0	4	71.0	53.8	3.0	7	9	25.2	17.2	6	6	M8
100	127	122.2	134.3	5	74.0	54.0	3.0	9	11	30.0	20.0	6	6	M8

MFLCT

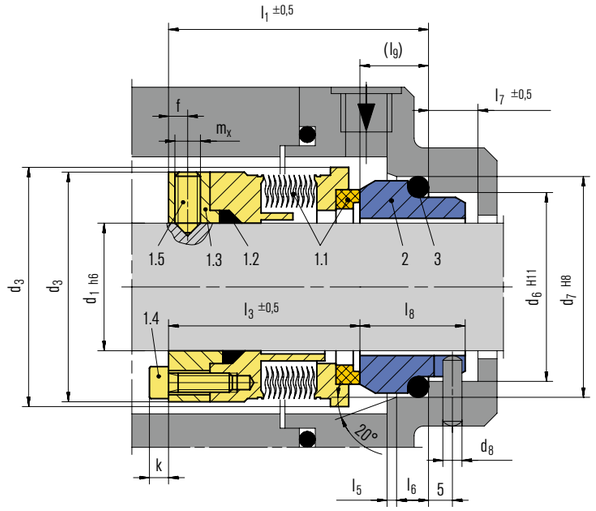

Features

- For unstepped shafts
- Rotating bellows
- Single seal
- Balanced
- Independent of direction of rotation
- Metal bellows

Advantages

- For extreme cold temperature ranges
- No dynamically loaded O-Ring
- Self cleaning effect
- Short installation length possible
- Pumping screw for highly viscous media available (dependent on direction of rotation).

Operating range (see note on page 1)

Shaft diameter: d_1 = 24 ... 150 mm (0.94" ... 6")
Externally pressurized: p_1 = ... 25 bar (363 PSI)
Internally pressurized: p_1 = 10 bar (145 PSI)
Stationary seat lock necessary
Temperature: t = –100 °C ... +100 °C
(–148 °F ... +212 °F)
Sliding velocity: v_g = 20 m/s (66 ft/s)

Materials

	Item	Part no. to DIN 24250	Description
Seal face: Carbon graphite antimony impregnated (A), Silicon carbide (Q12)	1.1	472/481	Seal face with bellows unit
Seat: Silicon carbide (Q1)	1.2	410	Sealing ring
Bellows: Inconel® 718 hardened (M6),	1.3	474	Drive collar
Hastelloy® C-276 (M5)	1.4		Socket head screw
Metal parts: CrNiMo steel (G)	1.5	904	Set screw
Hastelloy® C-4 (M)	2	475	Seat
	3	412	Sealing ring

Recommended applications

- Refining technology
- Power plant technology
- Chemical industry
- Cold media
- Highly viscous media
- Pumps
- Special rotating equipment

Product variant

MFLCT90
Shaft diameter: d_1 = 20 ... 150 mm (0.64" ... 6")
Internally pressurized: p_1 = ... 16 bar (232 PSI)
Externally pressurized: p_1 = 10 bar (145 PSI),
stationary seat lock necessary
Temperature: t = –100 °C ... +100 °C
(–148 °F ... +212 °F),
Sliding velocity: v_g = 20 m/s (66 ft/s)

Dimensions in mm

d_1	d_3	d_3 [2)]	d_6	d_7	d_8	l_1	l_3	l_5	l_6	l_7	l_8	l_9	f	k	m_x
16	38	–	29.0	35.0	3	58.0	46.5	2.0	5	9	19.5	11.5	5	5	M5
18	40	–	31.0	37.0	3	58.0	46.5	2.0	5	9	19.5	11.5	5	5	M5
20	42	–	34.0	40.0	3	58.0	46.5	2.0	5	9	19.5	11.5	5	5	M5
22	44	–	37.0	43.0	3	58.0	46.5	2.0	5	9	19.5	11.5	5	5	M5
24	46	49.8	37.0	43.0	3	58.0	46.5	2.0	5	9	19.5	11.5	5	5	M5
25	47	51.7	39.0	45.0	3	58.0	46.5	2.0	5	9	19.5	11.5	5	5	M5
28	50	54.5	42.0	48.0	3	58.0	46.5	2.0	5	9	19.5	11.5	5	5	M6
30	52	56.6	44.0	50.0	3	58.0	46.5	2.0	5	9	19.5	11.5	5	5	M6
32	54	59.5	49.0	56.0	4	60.5	46.5	2.0	6	9	22.0	14.0	5	5	M6
33	55	59.5	49.0	56.0	4	60.5	46.5	2.0	6	9	22.0	14.0	5	5	M6
35	57	62.5	51.0	58.0	4	60.5	46.5	2.0	6	9	22.0	14.0	5	5	M6
38	60	65.7	54.0	61.0	4	60.5	46.5	2.0	6	9	22.0	14.0	5	5	M6
40	66	65.7	56.0	63.0	4	61.5	47.5	2.0	6	9	22.0	14.0	5	6	M6
43	69	68.6	59.0	66.0	4	61.5	47.5	2.0	6	9	22.0	14.0	5	6	M6
45	71	71.5	62.0	70.0	4	62.5	47.5	2.5	6	9	23.0	15.0	5	6	M6
48	74	75.1	65.0	73.0	4	62.5	47.5	2.5	6	9	23.0	15.0	5	6	M6
50	76	76.1	67.0	75.0	4	62.5	47.5	2.5	6	9	23.0	15.0	5	6	M6
53	79	80.8	70.0	78.0	4	62.5	47.5	2.5	6	9	23.0	15.0	5	6	M6
55	81	80.8	72.0	80.0	4	62.5	47.5	2.5	6	9	23.0	15.0	5	6	M6
58	85	84.0	75.0	83.0	4	68.0	53.0	2.5	6	9	23.0	15.0	5	6	M6
60	87	92.3	77.0	85.0	4	68.0	53.0	2.5	6	9	23.0	15.0	6	6	M8
63	90	95.5	81.0	90.0	4	71.0	53.0	2.5	7	9	26.0	18.0	6	6	M8
65	92	95.5	83.0	92.0	4	71.0	53.0	2.5	7	9	26.0	18.0	6	6	M8
68	95	101.3	88.0	97.0	4	71.0	53.0	2.5	7	9	26.0	18.0	6	6	M8
70	97	101.3	88.0	97.0	4	71.0	53.0	2.5	7	9	26.0	18.0	6	6	M8
75	102	105.0	95.0	105.0	4	71.0	52.8	3.0	7	9	26.2	18.2	6	6	M8
80	107	110.6	100.0	110.0	4	71.0	52.8	3.0	7	9	26.2	18.2	6	6	M8
85	112	117.0	105.0	115.0	4	71.0	52.8	3.0	7	9	26.2	18.2	6	6	M8
90	117	120.2	110.0	120.0	4	71.0	53.8	3.0	7	9	25.2	17.2	6	6	M8
95	122	125.2	115.0	125.0	4	71.0	53.8	3.0	7	9	25.2	17.2	6	6	M8
100	127	130.2	122.2	134.3	5	74.0	54.0	3.0	9	11	30.0	20.0	6	6	M8

[2)] d_3 executed in Hastelloy®

MF95N

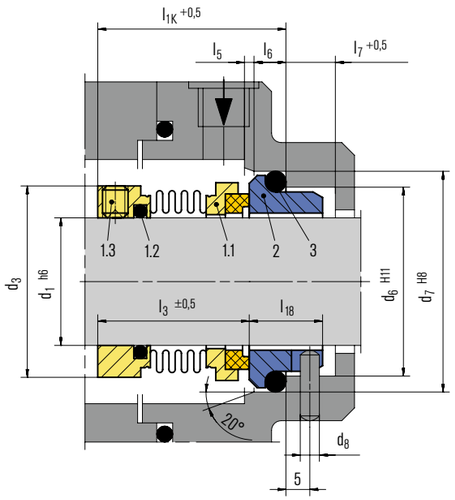

Features

- For unstepped shafts
- Rotating bellows
- Single seal
- Balanced
- Independent of direction of rotation
- Roller bellows

Advantages

- For extreme temperature ranges
- No dynamically loaded O-Ring
- Very good self cleaning effect
- Suitable for low-end sterile applications

Operating range (see note on page 1)

Shaft diameter: d_1 = 14 ... 100 mm (0.55" ... 3.94")
Temperature: t = –40 °C ... +220 °C (–40 °F ... +428 °F)
Pressure: p = 16 bar (232 PSI)
Sliding velocity: v_g = 20 m/s (66 ft/s)
Axial movement: ±0.5 mm

Materials

Bellows: Hastelloy® C-276 (M5)
Seal face: Silicon carbide (Q12),
Carbon graphite resin impregnated (B),
Carbon graphite antimony impregnated (A)
Seat: Silicon carbide (Q1)
Metal parts: CrNiMo steel (G1)

Standards and approvals

- EN 12756

Recommended applications

- Water and waste water technology
- Refining technology
- Power plant technology
- Chemical industry
- Pharmaceutical industry
- Food an beverage industry
- Hot media
- Cold media
- Highly viscous media
- Pumps
- Special rotating equipment

Item	Part no. to DIN 24250	Description
1.1	472/481	Seal face with bellows unit
1.2	412.1	O-Ring
1.3	904	Set screw
2	475	Seat (G16)
3	412.2	O-Ring

Product variant

MF90N

Shaft diameter: d_1 = 14 ... 100 mm (0.55" ... 3.94")
Temperature: t = –40 °C ... +220 °C (–40 °F ... + 428 °F)
Internally pressurized: p = 10 bar (145 PSI),
stationary seat lock necessary.
Sliding velocity: v_g = 20 m/s (66 ft/s)
Axial movement: ±0.5 mm

Dimensions in mm

d_1	d_3	d_6	d_7	d_8	l_{1k}	l_3	l_5	l_6	l_7	l_{18}
14	24	21	25	3	35.0	30.5	1.5	4	8.5	15.0
16	26	23	27	3	35.0	29.5	1.5	4	8.5	15.0
18	32	27	33	3	37.5	30.5	2.0	5	9.0	15.0
20	34	29	35	3	37.5	30.5	2.0	5	9.0	15.0
22	36	31	37	3	37.5	30.5	2.0	5	9.0	15.0
24	39	33	39	3	40.0	33.0	2.0	5	9.0	15.0
25	39	34	40	3	40.0	33.0	2.0	5	9.0	15.0
28	42	37	43	3	42.5	35.5	2.0	5	9.0	15.0
30	44	39	45	3	42.5	35.5	2.0	5	9.0	15.0
32	46	42	48	3	42.5	35.5	2.0	5	9.0	15.0
33	47	42	48	3	42.5	35.5	2.0	5	9.0	15.0
35	49	44	50	3	42.5	35.5	2.0	5	9.0	15.0
38	54	49	56	4	45.0	37.0	2.0	6	9.0	16.0
40	56	51	58	4	45.0	37.0	2.0	6	9.0	16.0
43	59	54	61	4	45.0	37.0	2.0	6	9.0	16.0
45	61	56	63	4	45.0	37.0	2.0	6	9.0	16.0
48	64	59	66	4	45.0	37.0	2.0	6	9.0	16.0
50	66	62	70	4	47.5	38.0	2.5	6	9.0	17.0
53	69	65	73	4	47.5	38.0	2.5	6	9.0	17.0
55	71	67	75	4	47.5	38.0	2.5	6	9.0	17.0
58	78	70	78	4	52.5	42.0	2.5	6	9.0	18.0
60	80	72	80	4	52.5	42.0	2.5	6	9.0	18.0
63	83	75	83	4	52.5	42.0	2.5	6	9.0	18.0
65	85	77	85	4	52.5	42.0	2.5	6	9.0	18.0
68	87	81	90	4	52.5	41.5	2.5	7	9.0	18.5
70	90	83	92	4	60.0	48.5	2.5	7	9.0	19.0
75	99	88	97	4	60.0	48.5	2.5	7	9.0	19.0
80	104	95	105	4	60.0	48.5	3.0	7	9.0	19.0
85	109	100	110	4	60.0	48.5	3.0	7	9.0	19.0
90	114	105	115	4	65.0	52.0	3.0	7	9.0	20.5
95	119	110	120	4	65.0	52.0	3.0	7	9.0	20.5
100	124	115	125	4	65.0	52.0	3.0	7	9.0	20.5

YE400

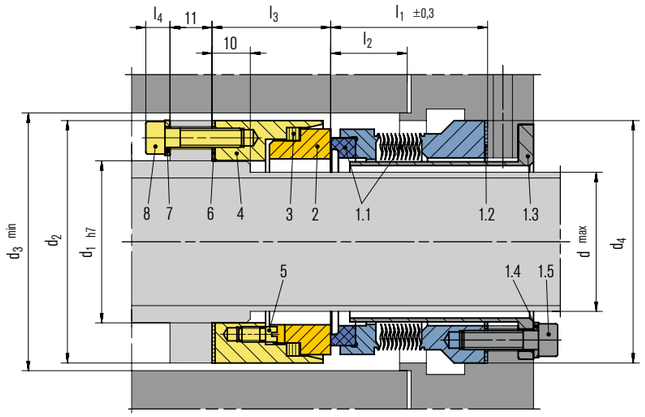

Features

- Single seal
- Balanced
- Independent of direction of rotation
- Stationary metal bellows

Advantages

- For high or low temperature applications

Operating range (see note on page 1)

Pressure (single ply bellows):
p = vacuum ... 20 bar (... 290 PSI)
Pressure (two ply bellows):
p = vacuum ... 35 bar (... 508 PSI)
Temperature:
t = −240 °C ... +425 °C (−400 °F ... +797 °F)
Sliding velocity: v_g = ... 50 m/s (164 ft/s)
Viscosity: ... 1 Pa·s

Materials

Seal face: High density carbon graphite
Seat: Silicon carbide (Q2)
Bellows: Inconel® 718 (M6)
Secondary seals: Graphite
Metal parts: 1.4404, Carpenter® 42 (T4)

Recommended applications

- Refining technology
- Power plant technology
- Chemical industry
- High and low temperature hydrocarbon services
- Bottom fluid
- Residual oil
- Gas oil
- Low temperature ethylene
- Pumps
- Special rotating equipment

Item	Description
1	Stationary unit
1.1	Bellows unit
1.2	Gasket
1.3	Clamp sleeve
1.4	Spring washer
1.5	HSH cap screw
2	Seat Housing
3	Secondary seal
4	Seat housing
5	Drive pin
6	Gasket
7	Spring washer
8	HSH cap screw

Dimensions in mm

Size code	d	d_1	d_2	d_3	d_4	l_1	l_2	l_3	l_4
X14	18	21	42	47	44	36	15	31	6.3
X16	21	26	47	50	47	38	17	31	6.3
X18	24	29	50	53	50	38	17	31	6.3
X20	27.5	32	53	56	53	38	17	31	6.3
X22	31	36	57	60	57	38	17	31	6.3
X24	33	39	60	64	60	41	20	31	6.3
X26	36	42	63	67	63	41	20	31	6.3
X28	39	45	66	70	66	41	20	31	6.3
X30	42	48	69	73	69	41	20	31	6.3
X32	45	51	72	76	72	41	20	31	6.3
X34	46.5	54	75	80	76	43	22	31	6.3
X36	50	58	79	83	79	43	22	31	6.3
X38	53	61	82	86	82	43	22	31	6.3
X40	55	64	85	89	85	51	30	31	6.3
X42	58.5	67	89	92	88	51	30	31	6.3
X44	62.5	71	92	96	92	51	30	31	6.3
X46	64	74	96	99	95	55	34	31	6.3
X48	67	77	99	102	98	55	34	31	6.3
X50	70	81	102	105	101	55	34	31	6.3
X52	73	84	105	108	104	55	34	31	6.3
X54	75.5	87	109	111	107	55	34	31	6.3
X56	78.5	90	113	116	111	58	37	31	6.3
X58	82	93	116	120	114	58	37	31	6.3
X60	85	96	119	122	117	58	37	31	6.3
X62	88	99	122	125	120	58	37	31	6.3
X64	91	103	125	128	123	58	37	31	6.3
X70	100	111	138	142	134	60	39	31	6.3
X78	110	116	147	152	145	60	39	41	7.5
X90	129	137	168	173	166	63	42	41	7.5

MFL65

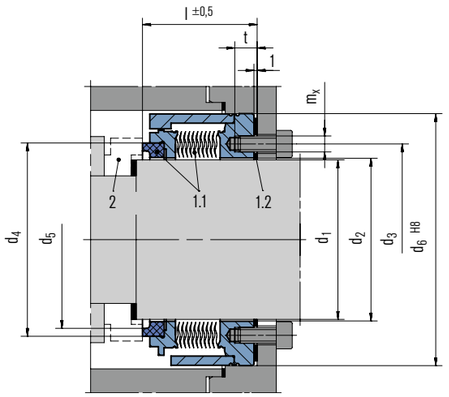

Features

- Stationary bellows
- Single seal
- Balanced
- Independent of direction of rotation

Advantages

- For high temperature
- High sliding velocities
- No elastomer secondary seals

Operating range (see note on page 1)

Shaft diameter: d_1 = 16 ... 100 mm (0.64" ... 4"),
(> 100 mm on request)

Externally pressurized:
p_1 = 25 bar (363 PSI),
(higher pressure possible, please inquire)

Internally pressurized:
p_1 <120 °C (248 °F) 10 bar (145 PSI),
p_1 <220 °C (428 °F) 5 bar (72 PSI),
p_1 <400 °C (752 °F) 3 bar (44 PSI)
Stationary seat lock necessary.

Temperature: t = –20 ... +400 °C (–4 °F ... +752 °F)

Sliding velocity: v_g = 50 m/s (165 ft/s)

Materials

Bellows: Inconel® 718 (M6), Hastelloy® C-276 (M5)
Seal face: Carbon graphite antimony impregnated (A),
Silicon carbide (Q12)
Seat: Silicon carbide (Q1), Special cast CrMo steel (S)
Metal parts: Duplex (G1), Carpenter® 42 (T4),
Hastelloy® C-4 (M)

Recommended applications

- Refining technology
- Power plant technology
- Chemical industry
- Hot media
- High sliding velocities
- Pumps
- Special rotating equipment

Item	Part no. to DIN 24250	Description
1.1	472 and 481	Seal face and bellows unit
1.2	400.1	Flat gasket
2	475	Seat

Product variant

MFL69
Shaft diameter: d_1 = 16 ... 100 mm (0.64" ... 4"),
(> 100 mm on request)
Internally pressurized:
p_1 = 16 bar (232 PSI),
(higher pressure possible, please inquire)
Externally pressurized:
p_1 = 10 bar (145 PSI),
stationary seat lock necessary.
Temperature: t = –20 °C ... +400 °C (–4 °F ... +752 °F)
Sliding velocity: v_g = 50 m/s (165 ft/s)

Dimensions in mm

d	d_1	d_2	d_3	d_4	d_5	d_6	l	n x m_x	t
19	16–19	20.5	29	30.3	25.3	45.0	33.5	4 x M4	6
24	20–24	25.5	35	38.8	33.8	49.0	33.5	4 x M4	6
30	25–30	31.5	40	43.6	38.6	55.0	34.5	6 x M4	6
35	31–35	36.0	45	45.8	40.8	59.0	33.0	6 x M4	6
40	36–40	41.0	50	51.5	46.5	65.0	30.5	6 x M4	6
45	41–45	46.0	55	55.2	50.2	69.0	35.5	6 x M4	6
51	46–51	52.0	63	64.7	59.7	76.5	40.5	6 x M5	7
60	52–60	61.0	70	70.6	65.6	84.0	32.0	6 x M5	7
70	61–70	71.0	80	82.8	76.8	95.0	38.0	6 x M5	7
82	71–82	83.5	95	98.0	92.0	112.0	41.0	6 x M6	7
88	83–88	89.5	100	107.7	101.7	120.0	47.0	6 x M6	7
100	89–100	101.0	112	112.7	106.7	130.0	47.0	6 x M6	7

EK777

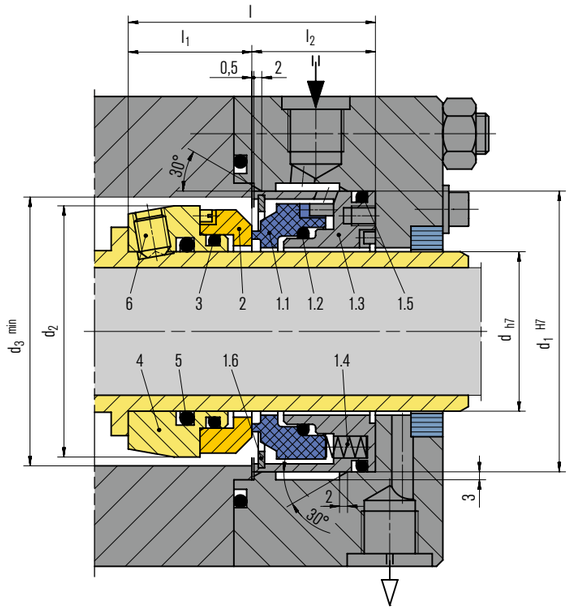

Features

- Single seal
- Balanced
- Independent of direction of rotation
- Stationary multiple springs
- Compact construction
- API 682 (Type A) compliant seal
- Angled set screw drive configuration ensures precise vertical alignment of rotary seat
- Distributed flush ensures even cooling flow to seal faces

Operating range (see note on page 1)

Pressure (product seal): vacuum ... 60 bar (... 870 PSI)
Temperature: −20 °C ... +200 °C (−4 °F ... +392 °F)
Sliding velocity 50 m/s (164 ft/s)
Viscosity: ... 300 mPa·s
Solids content: ... 0.3 %

Materials

Seal face: High density carbon graphite
Seat: Silicon carbide (Q1, Q2)
Secondary seals: FKM (V)
Metal parts: 1.4401 (G), 1.4301 (F)

Standards and approvals

- API 682/ISO 21049

Recommended applications

- Power plant technology
- Oil and gas industry
- LPG
- Hot water
- High pressure pumps
- Compressors
- Blowers
- High speed pumps
- Boiler feed pumps
- LPG

Item	Description
1.1	Seal face
1.2	O-Ring
1.3	Adapter
1.4	Spring
1.5	O-Ring
1.6	Retaining ring
2	Seat
3	O-Ring
4	Drive collar
5	O-Ring
6	Set screw

Product variant

Configuration example
acc. to API 682 (1CW-FL)

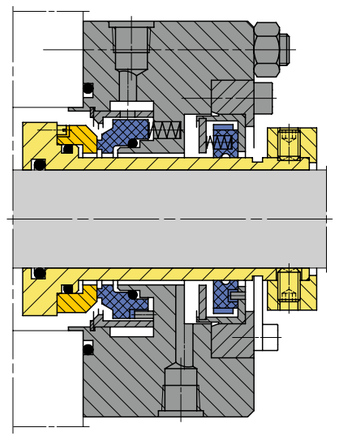

Dimensions in mm

d	d_1	d_2	d_3	l	l_1	l_2
20	50	40	46	56	27	29
25	54	46	52	56	27	29
30	60	51	57	56	27	29
35	64	56	62	56	27	29
40	72	63	69	62	31	31
45	76	68	74	62	31	31
50	85	76	82	66	33	33
55	90	82	88	66	33	33
60	100	90	96	66	33	33
65	105	93	99	66	33	33
70	110	99	105	66	33	33
75	115	104	110	66	33	33
80	120	111	117	68	35	33
85	127	117	123	68	35	33
90	132	120	126	68	35	33
95	140	129	135	68	35	33
100	145	132	138	68	35	33
105	150	137	143	68	35	33
110	162	144	150	68	35	33

HR

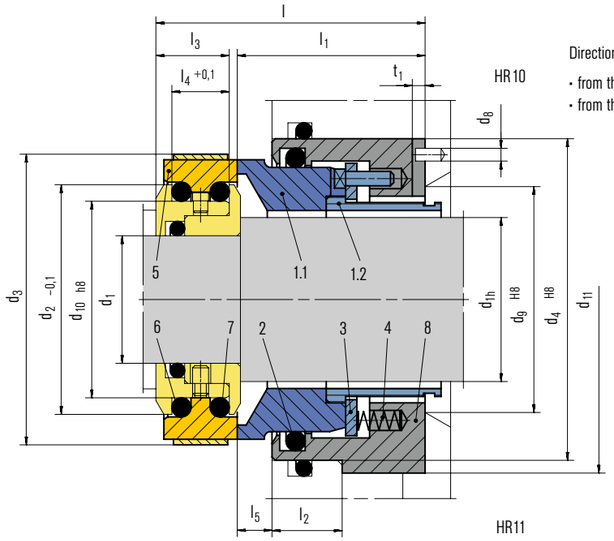

Direction of installation:

- from the impeller side HR10
- from the bearing side HR11

Features

- Single seal
- Balanced
- Independent of direction of rotation
- Multiple springs stationary
- Seat rotating
- Seat arranged directly behind the impeller
- Spring protection sleeve
- Variant with cylindrical spring and acc. EN 12756 (HRZ1) available
- Variant as cartridge with/without guide sleeve for application with/without quench (HR2, HR3)
- Dual seal as cartridge unit (HRKS-D) available

Advantages

- Especially for applications in solids containing media without external flush or internal product circulation. Solids content 40 % (single seal) and 60 % (double seal)
- Operation under vacuum without seat locking possible
- Pumping screw for increased circulation available
- Springs are protected from product and leakage
- No damage of the shaft by dynamically loaded O-Ring
- Insensitive to shaft deflections due to stationary design

Operating range (see note on page 1)

Shaft diameter: d_N = 36 ... 270 mm (1.4" ... 10.63")
Pressure: p_1* = 16 bar (230 PSI)
Temperature: t = –20 °C ... +160 °C (–4 °F ... +320 °F)
Sliding velocity: v_g = 10 m/s (33 ft/s)
*) For operation under vacuum it is necessary to arrange for quenching on the atmosphere side.

Materials

Seal face: Silicon carbide (Q1), (Q2)
Seat: Silicon carbide (Q1), (Q2)

Standards and approvals

- EN 12756 (HRZ1)

Recommended applications

- Water and waste water technology
- Power plant technology
- Pulp and paper industry
- Oil and gas industry
- Mining industry
- Dirty, abrasive and solids containing media
- Sewage water pumps
- Dredger pumps
- Oil sand extraction
- Scrubbers in flue-gas desulphurization plants (FGD)

Item	Part no. to DIN 24250	Description
1.1	472	Seal face
1.2	520	Sleeve
2	412.1	O-Ring
3	474	Thrust ring
4	477	Spring
5	475	Seat (G11)
6	412.2	O-Ring
7	412.3	O-Ring
8	441	Housing

Seat alternatives

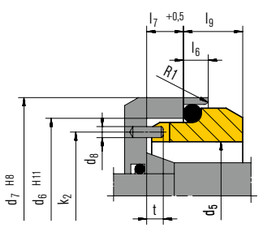

G2
(d_N 36 ... 90 mm)

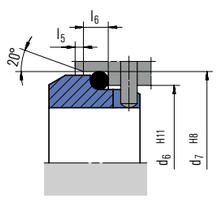

G9
(d_N 95 ... 180 mm)

Product variants

HR2
Cartridge-type single seal with guide sleeve (Item no. 2) for use with quench. Insert (Item no. 1) either metal or Silicon carbide.

HR3
Cartridge-type single seal. Insert (Item no. 1) either metal or silicon carbide. Optional without maintenance rinsing.

HRKS-D
Double seal in cartridge design for operation in barrier or buffer pressure mode (does not open if barrier pressure fails and closes automatically in the event of pressure reversal), available alternatively with a pumping screw for a higher rate of circulation. Torque transmission e. g. by shrink disk.

HRZ1
Single seal with cylindrical spring and type G76 seat. For installation in covers with installation dimensions according to EN 12756 B or U. Installation length l_{11} corresponds to max. l_{1k}. Intermediate sizes on request.

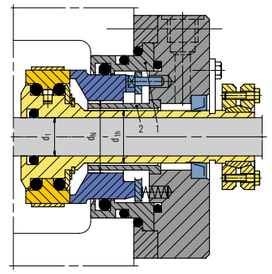

HR2

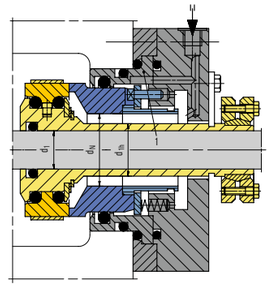

HR3

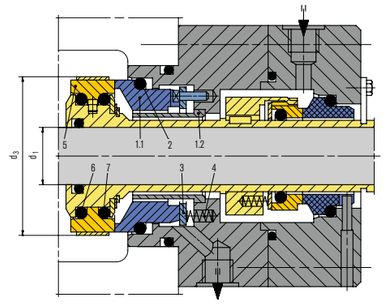

HRKS-D

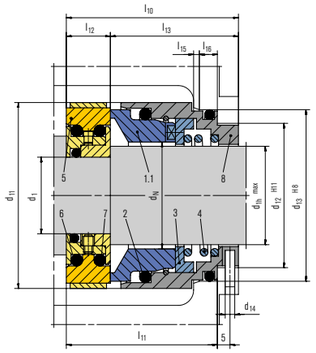

HRZ1

Dimensions in mm

d_1	d_{1h}	d_N	d_2	d_3	d_4	d_5	d_6	d_7	d_8	d_9	d_{10}	d_{11} + 0.2 min.	l	l_1	l_2	l_3	l_4	l_5	l_6	l_7	l_9	k_2	t	t_1
20	28	36	47.1	65	70	46	56.0	63.0	4	40	38	75	75	53	20	19.5	17	10.5	6	9	8.0	51.0	4.5	3
25	33	41	52.1	70	75	51	62.0	70.0	4	45	43	80	75	53	20	19.5	17	10.5	6	9	9.5	56.5	4.5	3
28	38	46	57.1	75	80	56	67.0	75.0	4	50	48	85	75	53	20	19.5	17	10.5	6	9	9.5	61.5	4.5	3
33	43	51	62.1	80	85	61	72.0	80.0	4	55	53	90	75	53	20	19.5	17	10.5	6	9	10.5	66.5	4.5	3
38	48	56	67.1	85	90	66	77.0	85.0	4	60	58	95	75	53	20	19.5	17	10.5	6	9	10.5	71.5	4.5	3
43	53	61	72.1	90	95	69	81.0	90.0	4	65	63	100	75	53	20	19.5	17	10.5	7	9	11.0	75.0	4.5	3
48	58	66	77.1	95	100	76	88.0	97.0	4	70	68	105	75	53	20	19.5	17	10.5	7	9	11.5	82.0	4.5	3
53	63	71	82.1	101	105	81	95.0	105.0	4	75	73	110	75	53	20	19.5	17	10.5	7	9	11.5	88.0	4.5	3
55	65	75	87.1	106	110	86	100.0	110.0	4	79	78	115	75	53	20	19.5	17	10.5	7	9	11.5	93.0	4.5	3
60	70	80	92.1	111	115	91	105.0	115.0	4	84	83	120	75	53	20	19.5	17	10.5	7	9	13.0	98.0	4.5	3
65	75	85	97.1	116	120	96	110.0	120.0	4	89	88	125	75	53	20	19.5	17	10.5	7	9	13.0	103.0	4.5	3
70	80	90	102.1	121	125	101	115.0	125.0	4	94	93	130	75	53	20	19.5	17	10.5	7	9	13.0	108.0	4.5	3
75	85	95	107.1	126	130	107	122.2	134.3	5	99	98	135	75	53	20	19.5	17	10.5	10	12	20.0	114.5	7.0	3
80	90	100	112.1	131	135	107	122.2	134.3	5	104	103	140	75	53	20	19.5	17	10.5	10	12	20.0	114.5	7.0	3
90	100	110	126.1	147	155	117	136.2	148.3	5	116	117	163	98	73	30	22.0	19	16.0	10	12	20.0	126.5	7.0	4
100	110	120	136.1	157	165	132	146.2	158.3	5	126	127	173	98	73	30	22.0	19	16.0	10	12	20.0	139.0	7.0	4
110	120	130	145.1	167	175	142	156.2	168.3	5	136	136	183	98	73	30	22.0	19	16.0	10	12	20.0	149.0	7.0	4
120	130	140	154.1	177	185	152	168.2	180.3	5	146	145	193	98	73	30	22.0	19	16.0	10	12	22.0	160.0	7.0	4
130	140	150	163.9	188	195	162	178.2	190.3	5	156	155	203	98	73	30	22.0	19	16.0	12	12	24.0	170.0	7.0	4
140	150	160	174.9	189	205	172	188.2	200.3	5	166	166	213	98	73	30	22.0	19	16.0	12	12	24.0	180.0	7.0	4
160	170	180	193.9	220	230	187	212.5	224.3	5	186	185	238	98	73	30	22.0	19	16.0	12	12	28.0	199.5	7.0	4
180	190	200	213.9	240	255	–	–	–	–	206	205	265	98	73	30	22.0	19	16.0	–	–	–	–	–	4
190	200	210	231.9	255	270	–	–	–	–	218	220	280	115	83	40	28.35	24.7	19.0	–	–	–	–	–	5
200	210	220	241.9	265	280	–	–	–	–	228	230	290	115	83	40	28.35	24.7	19.0	–	–	–	–	–	5
210	220	230	251.9	275	290	–	–	–	–	238	240	300	115	83	40	28.35	24.7	19.0	–	–	–	–	–	5
220	230	240	261.9	285	300	–	–	–	–	248	250	310	115	83	40	28.35	24.7	19.0	–	–	–	–	–	5
230	240	250	271.9	295	310	–	–	–	–	258	260	320	115	83	40	28.35	24.7	19.0	–	–	–	–	–	5
250	260	270	291.9	315	330	–	–	–	–	278	280	340	115	83	40	28.35	24.7	19.0	–	–	–	–	–	5

HRZ1 – Dimensions in mm

d_N	d_{1h}	d_1	d_{11}	d_{12}	d_{13}	d_{14}	l_{10}	l_{11}	l_{12}	l_{13}	l_{15}	l_{16}
35	33	20	56	42	48	3	57.7	49.2	15.0	42.7	2.0	5
43	39	27	67	54	61	4	57.7	49.2	15.0	42.7	2.0	6
54	50	35	78	65	73	4	59.8	52.1	15.5	44.3	2.5	6
66	60	47	91	77	85	4	66.0	58.0	16.5	49.5	2.5	6
77	72	55	103	88	97	4	74.5	66.0	17.5	57.0	2.5	7
100	90	70	125	110	120	4	82.0	73.0	21.0	61.0	3.0	7

HRC...N

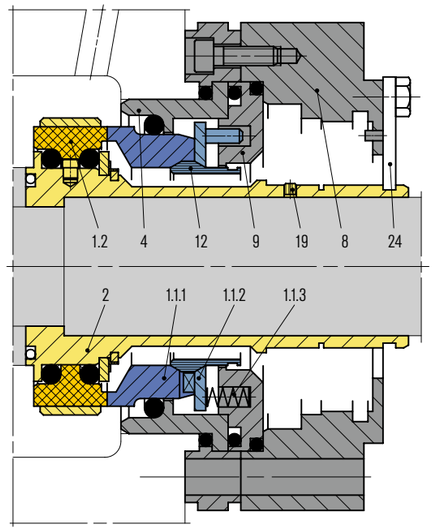

Features

- Cartridge
- Balanced
- Independent of direction of rotation
- Stationary multiple springs
- Variant with short installation length (HRC1100N)
- Spring protection sleeve
- Variant for operation with pressureless quench available (HRC2000N)
- Dual seal with and without pumping screw (HRC3000NF, HRC3000N) available

Advantages

- Insensitive to solids containing media. Solids content 40 % (single seal) and 60 % (double seal)
- Springs are protected from product and leakage
- Broad field of application due to modular system
- Optimal for standardization purposes
- Variant with short installation length to meet limited space conditions (HRC1100N)
- Seal remains closed in case of barrier pressure failure, self-closing at pressure reversal (HR3000NF)
- Operation under vacuum without seat locking possible
- Pumping screw for increased circulation available
- No damage of the shaft by dynamically loaded O-Ring
- Insensitive to shaft deflections due to stationary design
- Straightforward installation due to pre-assembled unit
- Installation errors are excluded
- No damage caused by dirt entered during assembly

Operating range (see note on page 1)

Shaft diameter: d_{10} = 30 ... 60 mm (1.181" ... 2.362")
Pressure: p_1 = 25 bar (360 PSI)
Temperature: t = –20 °C ... +160 (200*) °C
(–4 °F ... +320 (382*) °F)
Sliding velocity: v_g = 20 m/s (66 ft)
Axial movement: 1.0 mm
* Due to shrinking

Materials

Seal face: Silicon carbide (Q1, Q2)
Seat: Carbon graphite antimony impregnated (A), Silicon carbide (Q1, Q2)

Standards and approvals

- DIN 24960 C

Recommended applications

- Chemical industry
- Dirty, abrasive and solids containing media
- Various chemical processes
- Chemical standard pumps

Item	Part no. to DIN 24250	Description
1.1.1	472.1	Seal face
1.1.2	474	Thrust ring
1.1.3	477.1	Spring
1.2	475.1	Seat
2	523	Shaft sleeve
4	513	Insert
8	160	Cover plate
9	509	Spring carrier
12		Spring protection sleeve
19		Plug
24		Assembly fixture

Product variants

HRC1100N
Same design as HRC1000N, but with a shorter cover plate featuring integral spring and drive pin pockets (Item no. 8). No adapter (Item no. 9). Shaft sleeve (Item no. 2) uncoated. Differs from modular system!

HRC2000N
Single seal with pressureless quench for cooling, featuring guide sleeve (Item no. 12) baffle (Item no. 17), adapter (Item no. 15) and lip seal (Item no. 13) on the atmosphere side. Option: Throttle ring for sealing steam quench on the atmosphere side.

HRC3000NF
With pumping screw dependent on direction of rotation. Dual seal which remains closed in case of barrier pressure failure and closes automatically in the event of pressure reversal. With guide sleeve (item no. 12) and balanced mechanical seal on the atmosphere side (item nos. 13.1, 13.2). Operation as single seal with quench is possible.

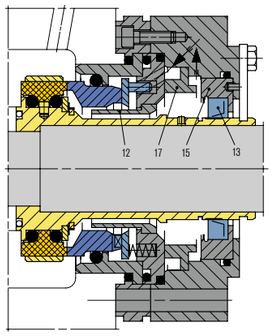

HRC2000N

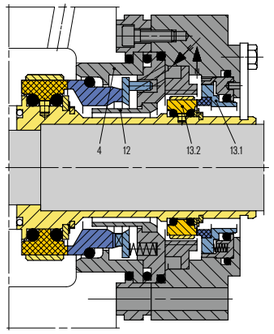

HRC3000NF

Dimensions in mm

d_{10} 1)	d_{11} 1)	d_{12} 2)	d_{13} 3)	d_{14} 2)	d_{15} 4)	d_{16}	d_{17} 5)	d_{18} 1)6)	d_{19}	d_{20}	d_{21}	d_{22}	l_8 7)	l_9	l_{10}	l_{11} 2)7)	l_{12} 2)7)	l_{13} 8)	l_{14}	l_{15}	l_{16}	l_{17}	l_{18}	l_{19}	l_{20}	l_{21}	l_{22}	l_{23}	l_{24} 9)	l_{25}	S
30	24	31	35	41	44	82	85	95	$d_{19} < d_{20}$	110	129	86	115	10	15	50	4	4	20	1	16	0.5	55	39	35	35	39	2	0.5	M10
40	32	41	45	51	54	92	95	110		130	155	96	130	10	15	52	4	4	22	1	18	0.5	60	44	40	40	44	2	0.5	M12
50	42	51	55	61	66	105	110	125		145	168	111	140	12	15	55	4	4	25	1	21	0.5	60	44	45	45	44	2	0.5	M12
60	50	61	61	67	76	120	125	140		160	185	126	166	14	20	70	4	4	30	1	26	0.5	60	44	50	50	44	2	0.5	M12

1) H7 2) +0,2 3) –0,2 4) +0,5 5) h8 6) +7 7) +0,1 8) –0,1 9) 6 0.05

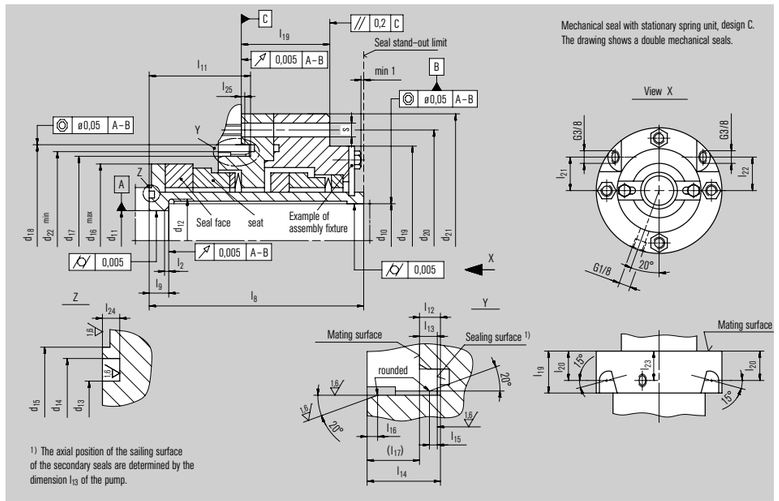

SH(V)

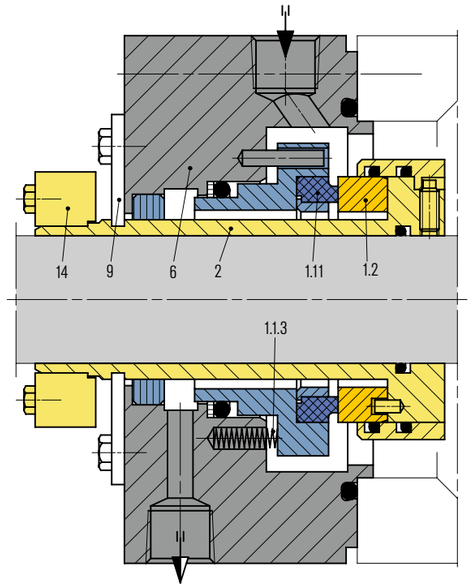

Features

- Cartridge design
- Single seal
- Balanced
- Stationary spring loaded unit
- Shrink-fitted seal face
- Multiple springs

Advantages

- Deformation-optimized seal for high pressures and high sliding velocities (static up to 500 bar and dynamic up to 150 bar)
- Economical due to standardized inner components
- High flexibility due to adaptation of the connection parts to the pump seal chamber
- Insensitive to shaft deflections due to stationary design
- Pre-assembled unit for quick and easy installation
- Suitable for use in compliance with API 682, type ES
- Version with loose-fitted seal face available, for extreme applications
- Only small number of components

Operating range (see note on page 1)

Shaft diameter: d_1* = 40 ... 250 mm (1.57" ... 9.84")
Pressure: p_1 = 150 bar (2,175 PSI)
Temperature: t = 200 °C (394 °F)
Sliding velocity: v_g = 60 m/s (197 ft/s)
Axial movement: ±3 mm
* Other sizes on request

Materials

Seal face: SiC-C-Si, silicon impregnated carbon (Q3), Carbon graphite, antimony impregnated (A)
Seat: Silicon carbide (Q)
Secondary seals: FKM (V), EPDM (E), FFKM (K)
Springs: Hastelloy® C-4 (M)
Metal parts: CrNiMo steel (G), Duplex (G1), Super Duplex (G4), Titanium (T2), Hastelloy® C-4 (M)

Item	Description
1.1.1	Seal face
1.1.3	Spring
1.2	Seat
2	Shaft sleeve
6	Cover
9	Assembly fixture
14	Shrink disk

Standards and approvals

- API 682/ISO 21049

Recommended seal supply

- API Plan 11, 31, 32, 61, 62, 13, 41

Recommended applications

- Oil and gas industry
- Refining technology
- Chemical industry
- Hot water
- Sour water
- Caustic soda
- Amines
- Crystallizing media
- Crude oil
- Process water
- Crude oil feed pumps
- Injection pumps
- Multi-phase pumps

Product variant

SH(V)I
Same design as SH(V) but with loosely inserted seal face for extreme applications.
Pressure: p_1 = 200 bar (2,900 PSI)

SHF/SHP

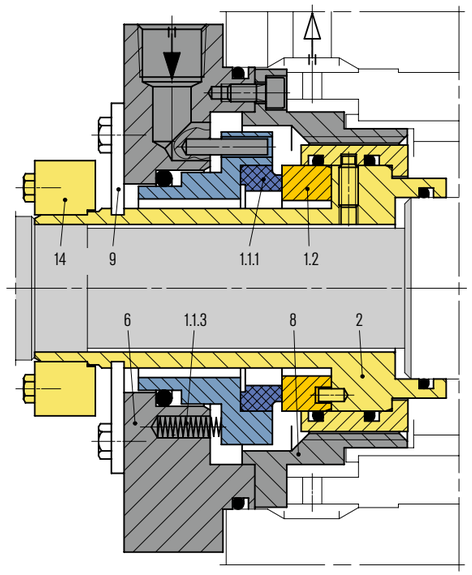

Features

- Cartridge design
- Single seal
- Balanced
- Dependent of direction of rotation
- Integrated pumping device
- Stationary spring loaded unit
- Shrink-fitted seal face
- Multiple springs

Advantages

- Deformation-optimized seal for high sliding velocities and medium pressures
- Economical due to standardized inner components
- Universal application for OEM or retrofits of boiler feed water pumps with floating ring seals, labyrinths or packings
- High flexibility due to adaptation of the connection parts to the pump seal chamber
- Optimum heat dissipation due to integrated pumping device and optimized seat design
- Insensitive to shaft deflections due to stationary design
- Pre-assembled unit for quick and easy installation
- Only small number of components
- Short built

Operating range (see note on page 1)

Shaft diameter: d_1* = 40 ... 250 mm (1.57" ... 9.84")
Pressure: p_1 = 50 bar (725 PSI)
Temperature: t = 300 °C (572 °F)
Sliding velocity: v_g = 60 m/s (197 ft/s)
Axial movement: ±3 mm
* Other sizes on request

Materials

Seal face: Silicon carbide (Q), Carbon graphite antimony impregnated (A), Carbon graphite resin impregnated (B)
Seat: Silicon carbide (Q)
Secondary seals: EPDM (E), FFKM (K)
Springs: CrNiMo steel (G)
Metal parts: CrNiMo steel (G)

Recommended seal supply

- API Plan 23

Recommended applications

- Power plant technology
- Boiler feed water pumps

Item	Description
1.1.1	Seal face
1.1.3	Spring
1.2	Seat
2	Shaft sleeve
6	Cover
8	Pumping screw with flow guide
9	Assembly fixture
14	Shrink disk

Product variant

SHF4
Single mechanical seal with integrated jacket cooling, for boiler feed pumps.

SHPV/SHFV

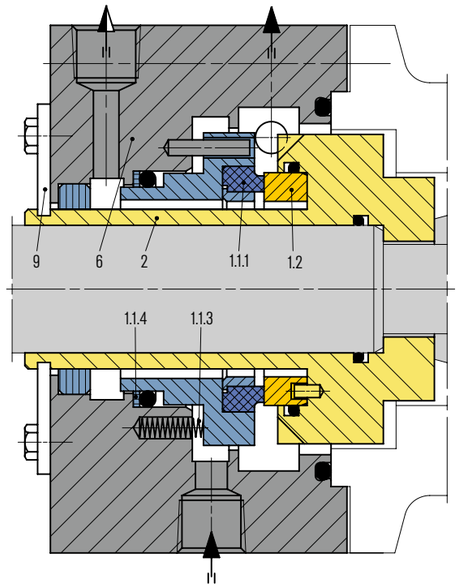

Features

- Cartridge design
- Single seal
- Balanced
- Dependent of direction of rotation
- Integrated pumping device
- Stationary spring loaded unit
- Shrink-fitted seal face
- Multiple springs

Advantages

- Deformation-optimized seal for highest pressure levels
- Economical due to standardized inner components
- High flexibility due to adaptation of the connection parts to the pump seal chamber
- Optimum heat dissipation due to integrated pumping device and optimized seat design
- Insensitive to shaft deflections due to stationary design
- Pre-assembled unit for quick and easy installation
- Only small number of components

Operating range (see note on page 1)

Shaft diameter: d_1* = 40 ... 250 mm (1.57" ... 9.84")
Pressure: p_1 = 150 bar (2,175 PSI)
Temperature: t = 350 °C (662 °F)
Sliding velocity: v_g = 60 m/s (197 ft/s)
Axial movement: ±3 mm
* Other sizes on request

Materials

Seal face: Carbon graphite antimony impregnated (A)
Seat: Silicon carbide (Q)
Secondary seals: EPDM (E), FFKM (K)
Springs: CrNiMo steel (G)
Metal parts: CrNiMo steel (G)

Recommended seal supply

- API Plan 23

Recommended applications

- Power plant technology
- Boiler feed water
- Boiler circulation pumps

Item	Description
1.1.1	Seal face pressure-stabilized
1.1.3	Spring
1.1.4	Back-up ring
1.2	Seat
2	Seat housing with pumping screw (F) or pumping ring (P)
6	Cover
9	Assembly fixture

Product variant

SHFV
Same design as SHPV but with pumping screw.

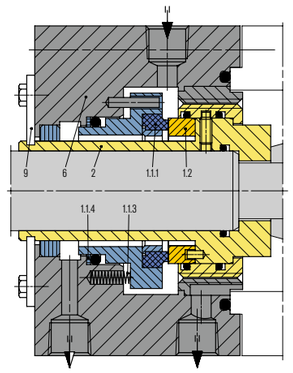

SAF(V)/SAP(V)

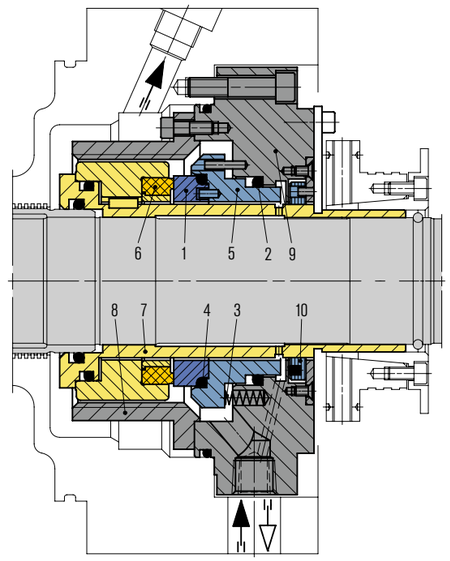

Features

- Cartridge design
- Single seal
- Balanced
- Dependent on direction of rotation
- Integrated pumping device
- Stationary spring loaded unit
- Inserted seal face
- Rotating carbon seat

Advantages

- Deformation-optimized seal for high sliding velocities and medium pressures
- Economical due to standardized inner components
- High flexibility due to adaptation of the connection parts to the pump seal chamber
- Optimum heat dissipation due to integrated pumping device and optimized seat/seal face design
- Insensitive to shaft deflections due to stationary design
- Pre-assembled unit for quick and easy installation
- Only small number of components

Operating range (see note on page 1)

Shaft diameter: d_1* = 120 ... 250 mm (4.72" ... 9.84")
Pressure: p_1 = 50 bar (725 PSI)
Temperature: t = 300 °C (572 °F)
Sliding velocity: v_g = 65 m/s (213 ft/s)
Axial movement: ±3 mm
* Other sizes on request

Materials

Seal face: Silicon carbide (Q), SiC-C-Si, silicon impregnated carbon (Q3)
Seat: Carbon graphite resin impregnated (B), SiC-C-Si, silicon impregnated carbon (Q3)
Secondary seals: EPDM (E), FFKM (K)
Springs: CrNiMo steel (G)
Metal parts: CrNiMo steel (G)

Recommended seal supply

- API Plan 02 + 23 (with jacket cooling)

Recommended applications

- Power plant technology
- Boiler feed water with low conductivity
- Boiler feed pumps

Item	Description
1	Seal face
2	O-Ring
3	Spring
4	O-Ring
5	Seat collar
6	Seat
7	Shaft sleeve
8	Pumping sleeve
9	Cover
10	Throttle ring

SHF(V)-D/SHP(V)-D

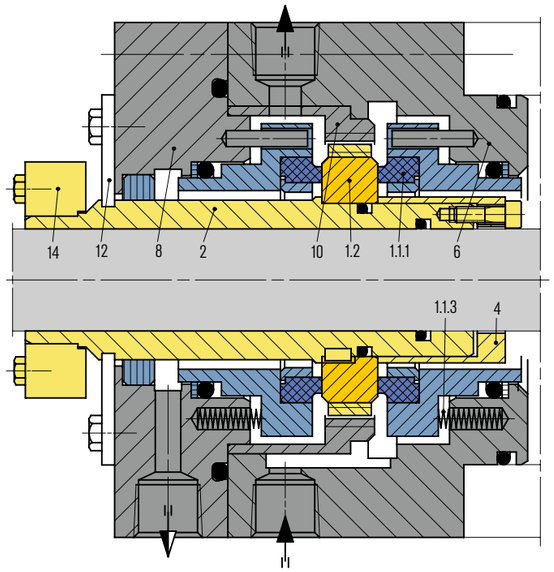

Features

- Cartridge design
- Dual seal
- Balanced
- Integrated pumping device
- Stationary spring loaded unit
- Shrink-fitted seal face
- One rugged seat
- Multiple springs arrangement

Advantages

- Deformation-optimized seal for high pressures and high sliding velocities (static up to 500 bar (7,250 PSI)) and dynamic up to 150 bar (2,175 PSI)
- Economical due to standardized inner components
- High flexibility due to adaptation of the connection parts to the pump seal chamber
- Optimum heat dissipation due to integrated pumping device
- Insensitive to shaft deflections due to stationary design
- Pre-assembled unit for quick and easy installation
- Dual seal does not open even in the event of barrier fluid pressure failure
- Reliable operation due to one rugged seat with bandage
- Suitable for use in compliance with API 682, type ES
- Version with loose-fitted seal face available, for extreme applications
- Only small number of components

Operating range (see note on page 1)

Shaft diameter: d_1* = 40 ... 250 mm (1.57" ... 9.84")
Pressure: p_3 = 150 bar (2,175 PSI)
Temperature: t = 200 °C (392 °F)
Sliding velocity: v_g = 60 m/s (197 ft/s)
* Other sizes on request

Materials

Seal face: SiC-C-Si, silicon impregnated carbon (Q3), Carbon graphite, antimony impregnated (A)
Seat: Silicon carbide
Secondary seals: FKM (V), EPDM (E), FFKM (K)
Springs: Hastelloy® C-4 (M)
Metal parts: CrNiMo steel (G), Duplex (G1), Super Duplex (G4), Pure Titanium (T2), Hastelloy® C-4 (M)

Standards and approvals

- API 682/ISO 21049

Recommended seal supply

- API Plan 53A, 53B, 53C, 54

Recommended applications

- Oil and gas industry
- Refining technology
- Chemical industry
- Volatile and non-volatile hydrocarbons
- Crude oil
- Process water
- Crude oil feed pumps
- Injection pumps
- Multi-phase pumps

Item	Description
1.1.1	Seal face
1.1.3	Spring
1.2	Seat
2	Shaft sleeve
4	Clamping sleeve
6	Housing
8	Cover
10	Pumping sleeve
12	Assembly fixture
14	Shrink disk

Product variants

SHF(V)I-D/SHP(V)I-D
Same design as SHF(V)-D/SHP(V)-D but with loosely inserted seal face for extreme applications.
Pressure: p_1 = 200 bar (2,900 PSI)

Splitex®

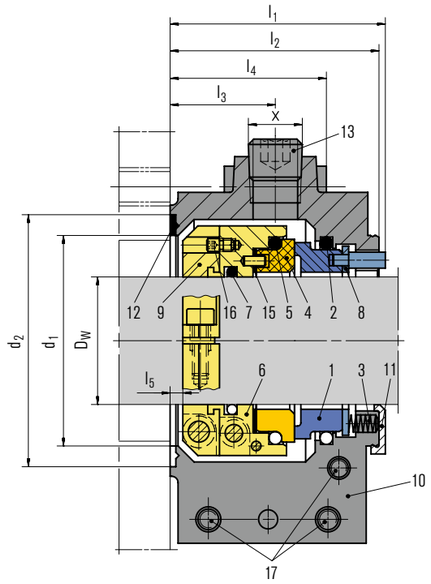

Features

- Fully split single seal, 2 x 2 segments, pre-assembled
- Semi-cartridge
- Balanced
- Stationary springs
- Bi-directional
- External pressurization
- Built-in flushing connections
- Installation and wear control

Advantages

- Reduced repair and downtime: 2 x 2 pre-assembled design speeds up and simplifies installation because pump does not have to be disassembled.
- Long service life: precise pre-alignment because of pre-assembled segments. Stationary springs which are protected from the product prevent clogging.
- Greater flexibility during installation: no modification necessary because the seal is located outside of the stuffing box.
- Shaft protection: uniform torque transmission via clamping ring prevents damage caused by set screws.
- Dependable operation: mechanical decoupling of clamping ring (torque transmission) avoids distortion of the seat.
- Simple monitoring of the seal during operation because of mechanical wear indicator on the seal face.
- Low leakage: elimination of secondary seals eliminates leakage paths between split components.
- High tolerance to shaft deflections ensured by stationary design and elastic seat mounting (gasket).

Operating range (see note on page 1)

Shaft diameter: d_1 = 50 ... 150 mm (1.940" ... 6.000")
Pressure: p_1 = 10 bar (145 PSI)
Temperature: t = –40 °C ... +150 °C (–40 °F ... +300 °F), above 80 °C (175 °F) flush is recommended
Sliding velocity: v_g = 10 m/s (33 ft/s)
Axial movement: ±1.5 mm (1/16")
Radial movement: ±0.8 mm (1/32")

Materials

Seal face: Carbon graphite antimoniny impregnated (A), Silicon carbide (Q6)
Seat: Silicon carbide (Q6)
Secondary seals: FKM (V), EPDM (E), NBR (P)
Springs: CrNiMo steel (G)
Metal parts: CrNiMo steel (G), CrNiMo cast steel (G)

Item	Description
1	Seal face
2, 5, 7	O-Ring
3	Spring
4	Seat
6	Driver
8	Thrust ring
9	Clamp collar
10	Housing
11	Assembly fixture
12, 15	Gasket
13	Head screw plug
14	Mounting plate
16	Set screw
17	Socket head screw

Recommended applications

- Water and waste water technology
- Pulp and paper industry
- Mining industry
- Power plant technology
- Shipbuilding
- Process industry
- Pulp
- Centrifugal pumps
- Agitators
- Displacement pumps
- Conveying pulp with stock pumps
- Conveying timber to refiners with pumping screws
- Circulation of pulp-and-water mixtures in storage vessels
- Pump stations for waste water treatment
- Cooling water pumps for energy generation

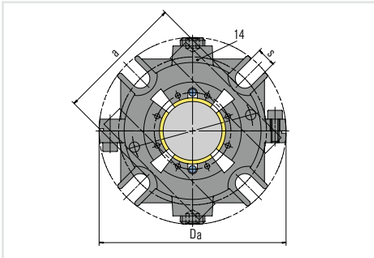

Seal cover

Dimensions in mm

D_w	D_w	d_1	d_2	D_a	a	s	l_1	l_2	l_3	l_4	l_5	x
50	1.969	75	84	138	88	15	63	61	30	45	3	3/8 NPT
60	2.362	89	101	149	105	17,5	64	62	30	46	3	3/8 NPT
70	2.756	98	113	176	118	20	64	62	30	46	3	3/8 NPT
80	3.150	110	132	191	135	20	65	63	31	47	3	3/8 NPT
90	3.543	121	140	203	145	22	72.5	70.5	31.5	50.5	3	1/2 NPT
100	3.937	131	150	216	155	22	72.5	70.5	31.5	50.5	3	1/2 NPT
110	4.331	142	165	230	170	22	72.5	70.5	31.5	50.5	3	1/2 NPT
120	4.724	152	175	240	180	22	72.5	70.5	31.5	50.5	3	1/2 NPT
125	4.921	162	185	268	190	26	89.5	87.5	43.5	62.5	4	1/2 NPT
140	5.512	175	200	303	205	26	89.5	87.5	43.5	62	4	1/2 NPT
150	5.906	188	215	308	220	26	89.5	57.5	43.5	62.5	4	1/2 NPT

Dimensions in inch

D_w	D_w	d_1	d_2	D_a	a	s	l_1	l_2	l_3	l_4	l_5	x
1.940	49.276	2.953	3.307	5.433	3.456	0.591	2.480	2.402	1.181	1.772	0.118	3/8 NPT
2.000	50.800	2.953	3.307	5.433	3.456	0.591	2.480	2.402	1.181	1.772	0.118	3/8 NPT
2.125	53.975	3.110	3.465	5.787	3.622	0.591	2.480	2.402	1.142	1.772	0.118	3/8 NPT
2.375	60.325	3.504	3.976	5.866	4.134	0.689	2.520	2.441	1.181	1.811	0.118	3/8 NPT
2.438	61.925	3.642	4.114	6.181	4.272	0.689	2.520	2.441	1.181	1.811	0.118	3/8 NPT
2.500	63.500	3.642	4.114	6.181	4.272	0.689	2.520	2.441	1.181	1.811	0.118	3/8 NPT
2.750	69.850	3.858	4.449	6.929	4.646	0.787	2.520	2.441	1.181	1.811	0.118	3/8 NPT
2.938	74.625	4.213	4.803	7.559	5.000	0.787	2.559	2.480	1.299	1.850	0.118	3/8 NPT
3.000	76.200	4.213	4.803	7.559	5.000	0.787	2.559	2.480	1.299	1.850	0.118	3/8 NPT
3.250	82.550	4.331	5.197	7.520	5.315	0.787	2.559	2.480	1.220	1.850	0.118	3/8 NPT
3.500	88.900	4.764	5.512	7.992	5.709	0.866	2.854	2.776	1.240	1.988	0.118	1/2 NPT
3.625	92.075	4.764	5.512	7.992	5.709	0.866	2.854	2.776	1.240	1.988	0.118	1/2 NPT
3.750	95.250	4.921	5.630	8.110	5.827	0.866	2.854	2.776	1.240	1.988	0.118	1/2 NPT
3.875	98.425	5.157	5.906	8.504	6.102	0.866	2.854	2.776	1.240	1.988	0.118	1/2 NPT
4.000	101.600	5.157	5.906	8.504	6.102	0.866	2.854	2.776	1.240	1.988	0.118	1/2 NPT
4.250	107.950	5.591	6.496	9.055	6.693	0.866	2.854	2.776	1.240	1.988	0.118	1/2 NPT
4.500	114.300	5.984	6.890	9.449	7.087	0.866	2.854	2.776	1.240	1.988	0.118	1/2 NPT
4.750	120.650	5.984	6.890	9.449	7.087	0.866	2.854	2.776	1.240	1.988	0.118	1/2 NPT
5.000	127.000	6.378	7.283	10.551	7.480	1.024	3.524	3.445	1.713	2.461	0.157	1/2 NPT
5.500	139.700	6.890	7.874	11.929	8.071	1.024	3.524	3.445	1.713	2.461	0.157	1/2 NPT
6.000	152.400	7.402	8.465	12.126	8.661	1.024	3.524	3.445	1.713	2.461	0.157	1/2 NPT

HGH201

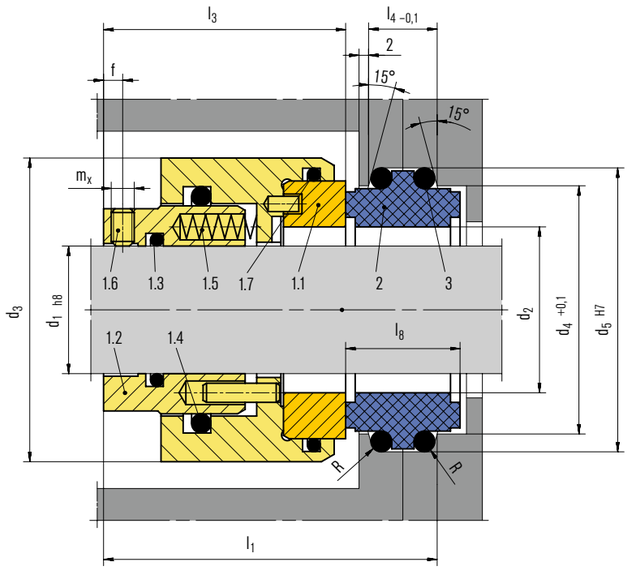

Features

- For plain shafts (HGH201)
- Semi split single seal
- Multiple springs rotating
- Balanced
- Independent of direction of rotation
- Unsplit as original equipment (HGH200)
- Cartridge available (based on HGH210)
- Variant for stepped shafts available (HGH211)
- Splitted seal parts: sliding faces and O-Rings

Advantages

- Economical: no complete dismantling of pump necessary
- Reduction of down-times and installation times
- Springs are protected from the product
- Rugged seal design
- Split seat can be used on both sides

Operating range (see note on page 1)

Shaft diameter: d_1 = 50 ... 310 mm (2" ... 12.20")
(larger diameters on request)
Pressure: p_1 = 25 bar (363 PSI)
Temperature: t_1 = 150 °C (302 °F)
Sliding velocity: v_g = 20 m/s (66 ft/s)
Axial movement: ±2.0 mm

Materials

Seal face: Silicon carbide (Q1)
Seat: Silicon carbide (Q1, Q2),
Carbon graphite antimony impregnated (A),
Carbon graphite resin impregnated (B)
Secondary seals: FKM, (V), EPDM (E), NBR, (P)
Metal parts: CrNiMo steel (G)

Recommended applications

- Water and waste water technology
- Power plant technology
- Shipbuilding
- Pulp and paper industry
- Sea water desalination
- Pulp with up to 5 % fiber content
- Water turbines
- Chest agitators
- Stern tubes
- Cooling water pumps
- Gears
- Defibrators

Item	Description
1.1	Seal face[1)]
1.2	Driver collar
1.3	O-Ring[1)]
1.4	O-Ring[1)]
1.5	Spring
1.6	Set screw
1.7	O-Ring[1)]
2	Stationary seat[1)]
3	O-Ring[1)]

1) For disassembly of unsplit seal faces, seats and O-Ring these should be broken or cut.

Torque transmission

d_1 ≥ 105 mm
Set screws with cone point
4 x offset by 90°

Product variant

HGH211
Dimensions, items and descriptions as HGH201. Item 1.2 driver collar is modified for securing on stepped shafts. Unsplit as original equipment: Designation HGH210.

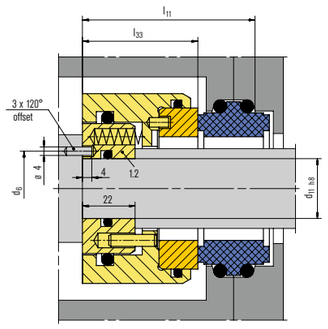

Dimensions in mm

d_1	d_{11}	d_2	d_3	d_4	d_5	d_6	l_1	l_{11}	l_3	l_{33}	l_4	l_8	R	f	m_x
50	40	60	95	80.5	89.6	55	95.3	75.3	70	50	18.8	31.8	2.5	6	M8
55	45	65	100	85.5	94.6	60	95.3	75.3	70	50	18.8	31.8	2.5	6	M8
60	50	70	105	90.5	99.6	65	95.3	75.3	70	50	18.8	31.8	2.5	6	M8
65	55	75	110	95.5	104.6	70	95.3	75.3	70	50	18.8	31.8	2.5	6	M8
70	60	80	115	100.5	109.6	75	95.3	75.3	70	50	18.8	31.8	2.5	6	M8
75	65	85	120	105.5	114.6	80	95.3	75.3	70	50	18.8	31.8	2.5	6	M8
80	70	90	125	110.5	119.6	85	95.3	75.3	70	50	18.8	31.8	2.5	6	M8
85	75	95	130	115.5	124.6	90	95.3	75.3	70	50	18.8	31.8	2.5	6	M8
90	80	100	135	120.5	129.6	95	95.3	75.3	70	50	18.8	31.8	2.5	6	M8
95	85	105	140	125.5	134.6	100	95.3	75.3	70	50	18.8	31.8	2.5	6	M8
100	90	110	145	130.5	139.6	105	95.3	75.3	70	50	18.8	31.8	2.5	6	M8
105	95	115	150	135.5	144.6	110	95.3	75.3	70	50	18.8	31.8	2.5	6	M8
110	100	120	155	140.5	149.6	115	95.3	75.3	70	50	18.8	31.8	2.5	6	M8
115	105	125	160	145.5	154.6	120	95.3	75.3	70	50	18.8	31.8	2.5	6	M8
120	110	130	165	150.5	159.6	125	95.3	75.3	70	50	18.8	31.8	2.5	6	M8
125	115	135	170	155.5	164.6	130	95.3	75.3	70	50	18.8	31.8	2.5	6	M8
130	120	140	175	160.5	169.6	135	95.3	75.3	70	50	18.8	31.8	2.5	6	M8
135	125	145	180	165.5	174.6	140	95.3	75.3	70	50	18.8	31.8	2.5	6	M8
140	130	150	185	170.5	179.6	145	95.3	75.3	70	50	18.8	31.8	2.5	6	M8
145	135	155	190	175.5	184.6	150	95.3	75.3	70	50	18.8	31.8	2.5	6	M8
150	140	160	195	180.5	189.6	155	95.3	75.3	70	50	18.8	31.8	2.5	6	M8
155	145	165	200	185.5	194.6	160	95.3	75.3	70	50	18.8	31.8	2.5	6	M8
160	150	170	205	190.5	199.6	165	95.3	75.3	70	50	18.8	31.8	2.5	6	M8
165	155	175	210	195.5	204.6	170	95.3	75.3	70	50	18.8	31.8	2.5	6	M8
170	160	180	215	200.5	209.6	175	95.3	75.3	70	50	18.8	31.8	2.5	6	M8
175	165	185	220	205.5	214.6	180	95.3	75.3	70	50	18.8	31.8	2.5	6	M8
180	170	192	225	212.5	224.6	185	104.2	84.2	72	52	26.4	38.0	3.5	6	M8
185	175	197	230	217.5	229.6	190	104.2	84.2	72	52	26.4	38.0	3.5	6	M8
190	180	202	235	222.5	234.6	195	104.2	84.2	72	52	26.4	38.0	3.5	6	M8
195	185	207	240	227.5	239.6	200	104.2	84.2	72	52	26.4	38.0	3.5	6	M8
200	190	212	245	232.5	244.6	205	109.2	84.2	77	52	26.4	38.0	3.5	6	M10
205	195	217	255	237.5	249.6	210	109.2	84.2	77	52	26.4	38.0	3.5	8	M10
210	200	222	260	242.5	254.6	215	109.2	84.2	77	52	26.4	38.0	3.5	8	M10
220	210	232	270	252.5	264.6	225	109.2	84.2	77	52	26.4	38.0	3.5	8	M10
230	220	242	280	262.5	274.6	235	109.2	84.2	77	52	26.4	38.0	3.5	8	M10
240	230	252	290	272.5	284.6	245	109.2	84.2	77	52	26.4	38.0	3.5	8	M10
250	240	262	300	282.5	294.6	255	109.2	84.2	77	52	26.4	38.0	3.5	8	M10
260	250	272	310	295.5	307.6	265	109.2	84.2	77	52	26.4	38.0	3.5	8	M10
270	260	282	320	305.5	317.6	275	109.2	84.2	77	52	26.4	38.0	3.5	8	M10
280	270	292	330	315.5	327.6	285	109.2	84.2	77	52	26.4	38.0	3.5	8	M10
290	280	302	340	325.5	337.6	295	109.2	84.2	77	52	26.4	38.0	3.5	8	M10
300	290	312	350	335.5	347.6	305	109.2	84.2	77	52	26.4	38.0	3.5	8	M10
310	300	322	360	345.5	357.5	315	109.2	84.2	77	52	26.4	38.0	3.5	8	M10

Cartex®-GSDN

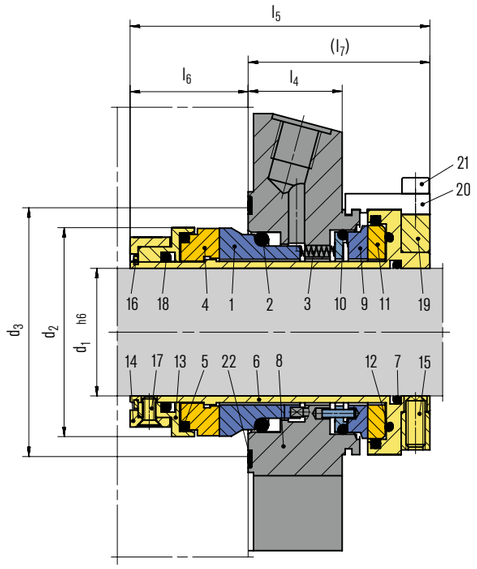

Features

- Stationary springs
- Rotating seat
- Double seal
- Balanced
- Cartridge unit
- Standard version with V-grooves, U-grooves optional (independent of direction of rotation)
- Gas-lubricated, gas-buffered
- Internally pressurized
- Does not open in the event of buffer pressure failure, self closing at pressure reversal

Advantages

- Contact-free operation
- No friction on the seal faces, no heat generated at the seal or in the medium
- No additional complex components to dissipate frictional heat
- Maximum environmental protection and maximum efficiency

Operating range (see note on page 1)

Shaft diameter: d_1 = 30 ... 100 mm (1.18" ... 3.94")
Pressure:
p_1 = 13 bar (189 PSI), p_3 = 16 bar (232 PSI)
with V-grooves (uni-directional)
p_1 = 9 bar (131 PSI), p_3 = 12 bar (174 PSI)
with U-grooves (bi-directional)

Differential pressure (p_3 – p_1) = min. 3 bar (44 PSI)

Operating temperature limits for:
EPDM –20 °C ... +140 °C (–4 °F ... +284 °F)
FFKM –20 °C ... +120 °C (–4 °F ... +248 °F)
FKM –20 °C ... +170 °C (–4 °F ... +338 °F)

Sliding velocity: v_g = 4 ... 15 m/s (13 ... 49 ft/s)
Axial movement: ±1.0 mm

Materials

Seal face: Silicon carbide (Q1/Q19)
Seat: Silicon carbide (Q19/Q1)
Secondary seals: FKM (V), EPDM (E), FFKM (K)
Spring: Hastelloy® C-4 (M)
Metal parts: CrNiMo steel (G), Hastelloy® C-4 (M)

Item	Description
1, 9	Seal face
2, 5, 7, 10, 12, 18	O-Ring
3	Spring
4, 11	Seat
6	Shaft sleeve
8	Cover
13	Retainer
14	Ring
15	Set screw
16	Retaining ring
17	Counter-sunk socket screw
19	Set ring
20	Assembly fixture
21	Socket head screw
22	Gasket

Recommended applications

- Chemical industry
- Refining technology
- Gases and liquids
- Media which require high purity
- Environmental harmful media
- Pumps

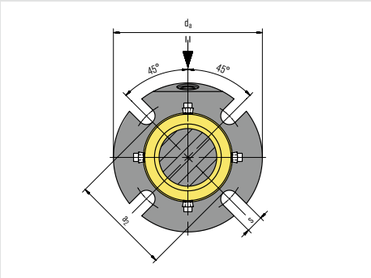

Seal cover

Dimensions in mm

d_1	d_2	d_{3min}	d_{3max}	l_4	l_5	l_6	l_7	a_2	da	s
30	52	54	57	25.4	86	33	53	67	105	14
33	55	57	60	25.4	86	33	53	70	108	14
35	57.5	59	62	25.4	86	33	53	72	110	14
38	61	63	70	25.4	86	33	53	75	123	14
40	61	63	70	25.4	86	33	53	77	123	16
43	64	66	70	25.4	86	33	53	80	133	16
45	67	68	75	25.4	86	33	53	82	138	16
48	70	71	77	25.4	86	33	53	85	138	16
50	71	73	78	25.4	86	33	53	87	148	16
53	75.3	77	82	28.5	89	33	56	97	148	18
60	83.5	85	90	28.5	89	33	56	104	155	18
65	93	95	102	25.4	100	41.6	58.4	116	163	18
70	101	102	110	25.4	100	41.6	58.4	124	178	18
75	107	108	119	28	107	41.6	65.4	129	193	18
80	111	111	124	28	107	41.6	65.4	129	198	18
90	121	121	131	28	107	41.6	65.4	140	205	22
100	130	132	144	28	107	41.6	65.4	154	218	22

EM300

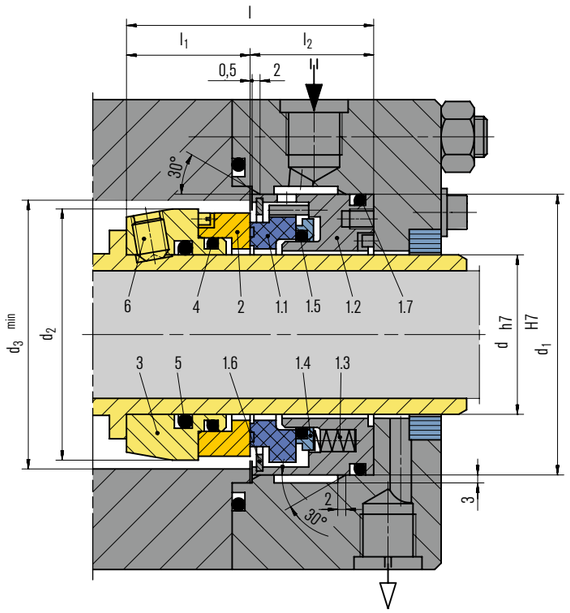

Features

- Balanced
- Independent of direction of rotation
- Stationary multiple springs
- API 682 arrangement 2 containment seal

Advantages

- Dry contact secondary seal
- Prevention of hazardous emissions
- Can be used as a secondary seal of tandem seal in liquid applications

Operating range (see note on page 1)

Pressure: p = 2 bar (29 PSI) normal operation,
max. 60 bar (870 PSI)
Temperature: t = –20 °C ... +200 °C (–40 °F ... +392 °F)
Sliding velocity: v_g = 25 m/s (82 ft/s)

Materials

Seal face: Special carbon
Seat: Silicon carbide (Q1, Q2)
Secondary seals: FKM (V)
Metal parts: 1.4401 (G)

Standards and approvals

- API 682/ISO 21049

Recommended applications

- Chemical industry
- Refining technology

Item	Description
1.1	Seal face
1.2	Adapter
1.3	Spring
1.4	Thrust ring
1.5	O-Ring
1.6	Retaining ring
1.7	O-Ring
2	Seat
3	Drive collar
4	O-Ring
5	O-Ring
6	Set screw

Product variant

Configuration example
acc. to API 682 (1CW-FL)

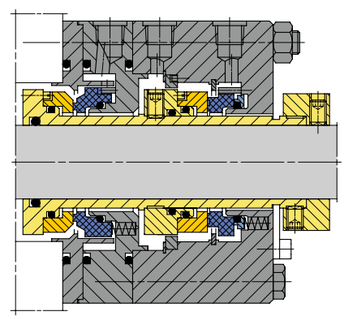

Dimensions in mm

$d_{max.}$	d_1	d_2	d_3	l	l_1	l_2
20	50	40	46	56	27	29
25	54	46	52	56	27	29
30	60	51	57	56	27	29
35	64	56	62	56	27	29
40	72	63	69	62	31	31
45	76	68	74	62	31	31
50	85	76	82	66	33	33
55	90	82	88	66	33	33
60	100	90	96	66	33	33
65	105	93	99	66	33	33
70	110	99	105	66	33	33
75	115	104	110	66	33	33
80	120	111	117	68	35	33
85	127	117	123	68	35	33
90	132	120	126	68	35	33
95	140	129	135	68	35	33
100	145	132	138	68	35	33

CGSH-K

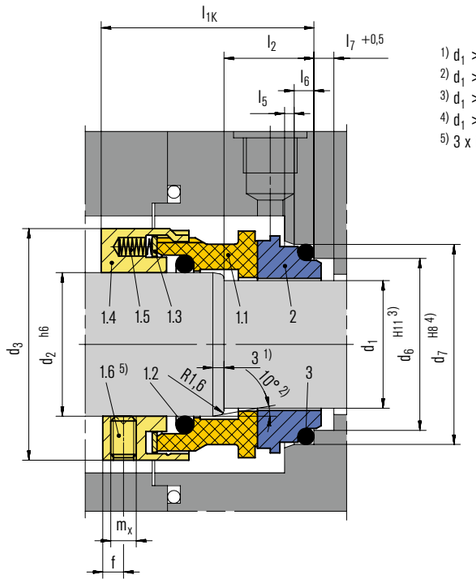

1) d_1 > 105: 2 mm x 30°
2) d_1 > 105: 30°
3) d_1 > 105: + 0.1
4) d_1 > 105: H7
5) 3 x 120°

Features

- For stepped shafts
- Rotating spring
- Single or double seal available
- Balanced
- Standard version with U-grooves, V-grooves optional (dependent of direction of rotation)
- Gas-lubricated
- Does not open in the event of buffer pressure failure, self closing at pressure reversal

Advantages

- Contact-free operation, no friction
- No differential pressure required with hard/soft material combination
- Applicable as containment seal acc. to API 682

Operating range (see note on page 1)

Shaft diameter: d_1 = 28 ... 125 mm (1.10" ... 4.92")
Pressure: p_1 = 25 bar (363 PSI)
Temperature: t* = –20 °C ... +170 °C (–4 °F ... +338 °F)
Sliding velocity: v_g = 4 ... 25 m/s (13 ... 82 ft/s)
* Depending on resistance of O-Rings

Materials

Seal face: Carbon graphite antimony impregnated (A), Silicon carbide (Q2),
alternatively: Carbon graphite resin impregnated (B), Silicon carbide (Q1)
Seat: Silicon carbide (Q1, Q2),
Silicon carbide (Q19, Q29) with seal face in Q1 resp. Q2
Metal parts: CrNiMo steel (G)

Standards and approvals

- EN 12756
- API 682/ISO 21049

Recommended applications

- Chemical industry
- Refining technology
- Gases and liquids (single seals only gas)
- Gases and liquids which must not get into the atmosphere (dual seal)
- Gases not harmful to the enivronment (single seal)
- Fans
- Small steam turbines
- Blowers
- Roots compressors
- Pumps

Item	Part no. to DIN 24250	Description
1.1	472	Sliding face
1.2	412.1	O-Ring
1.3	474	Thrust ring
1.4	485	Drive collar
1.5	477	Spring
1.6	904	Set screw
2	475.1	Seat
3	412.3	O-Ring

Product variants

CGSH-KD
Double seal back-to-back, buffered with gas, according to API 682 configuration 3NC-BB, Plan 74.
Items, descriptions and unspecified dimensions as for CGSH-K.

Pressure: p_1 = ... 22 bar (319 PSI),
p_3 = ... 25 bar (363 PSI)
(over the whole nominal diameter range, higher values on request).
Differential pressure Δp = min. 3 bar (44 PSI)
Other operating limits as CGSH-K.

Tandem arrangement acc. to API 682 3rd Edition
Configuration: 2CW-CS, Plan 72, 75, 76.
For media with a gaseous leakage. H75VN on the product side. In case of a failure, the CGSH on the atmosphere side, works as a liquid seal.

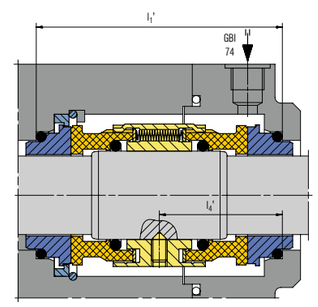

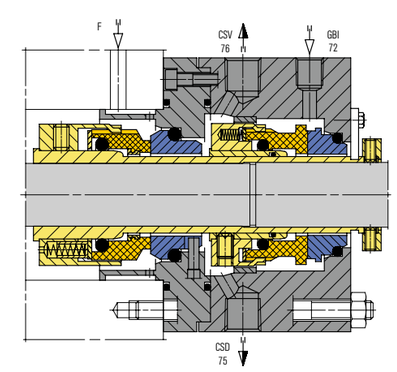

Dimensions in mm

d_1	d_2	d_3	d_6	d_7	l_{1k}	l_1'	l_2	l_4'	l_5	l_6	l_7	f	mx
28*	33	53	37.0	43.0	50.0	89	20	44.5	2.0	5	9	5	M6
30*	35	55	39.0	45.0	50.0	89	20	44.5	2.0	5	9	5	M6
32*	38	60	42.0	48.0	50.0	89	20	44.5	2.0	5	9	5	M6
33*	38	60	42.0	48.0	50.0	89	20	44.5	2.0	5	9	5	M6
35*	40	62	44.0	50.0	50.0	89	20	44.5	2.0	5	9	5	M6
38*	43	65	49.0	56.0	52.5	95	23	47.5	2.0	6	9	5	M6
40*	45	67	51.0	58.0	52.5	95	23	47.5	2.0	6	9	5	M6
43*	48	70	54.0	61.0	52.5	95	23	47.5	2.0	6	9	5	M6
45*	50	72	56.0	63.0	52.5	95	23	47.5	2.0	6	9	5	M6
48*	53	75	59.0	66.0	52.5	95	23	47.5	2.0	6	9	5	M6
50*	55	77	62.0	70.0	57.5	104	25	52.0	2.5	6	9	5	M6
53*	58	84	65.0	73.0	57.5	104	25	52.0	2.5	6	9	5	M6
55*	60	86	67.0	75.0	57.5	106	25	53.0	2.5	6	9	5	M6
58*	63	89	70.0	78.0	62.5	112	25	56.0	2.5	6	9	7	M8
60*	65	91	72.0	80.0	62.5	112	25	56.0	2.5	6	9	7	M8
63*	68	94	75.0	83.0	62.5	112	25	56.0	2.5	6	9	7	M8
65*	70	97	77.0	85.0	62.5	112	25	56.0	2.5	6	9	7	M8
70*	75	104	83.0	92.0	70.0	126	28	63.0	2.5	7	9	7	M8
75*	80	109	88.0	97.0	70.0	126	28	63.0	2.5	7	9	7	M8
80*	85	114	95.0	105.0	70.0	126	28	63.0	3.0	7	9	7	M8
85*	90	119	100.0	110.0	75.0	126	28	63.0	3.0	7	9	7	M8
90*	95	124	105.0	115.0	75.0	126	28	63.0	3.0	7	9	7	M8
95*	100	129	110.0	120.0	75.0	126	28	63.0	3.0	7	9	7	M8
100*	105	132	115.0	125.0	75.0	126	28	63.0	3.0	7	9	7	M8
105*	115	153	122.2	134.3	73.0	136	32	68.0	2.0	10	–	7	M8
110*	120	158	128.2	140.3	73.0	136	32	68.0	2.0	10	–	7	M8
115*	125	163	136.2	148.3	73.0	136	32	68.0	2.0	10	–	7	M8
120*	130	168	138.2	150.3	73.0	136	32	68.0	2.0	10	–	7	M8
125*	135	173	142.2	154.3	73.0	136	32	68.0	2.0	10	–	7	M8

* EN 12756

GSO-DN

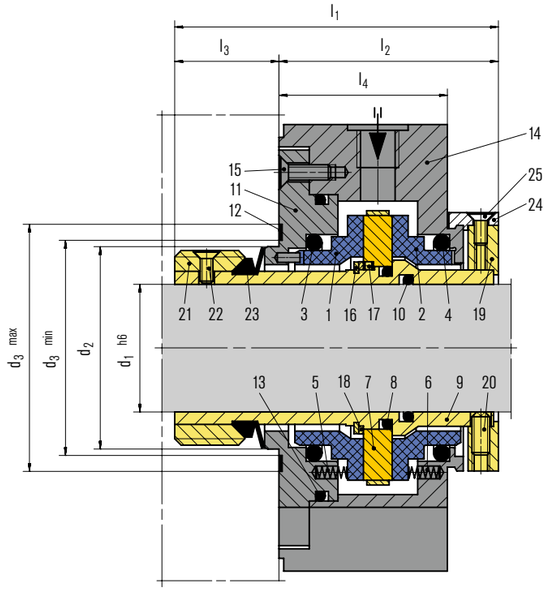

Features

- Seat rotating
- Stationary springs
- Double seal
- Balanced
- Standard version with V-grooves, U-grooves optional (independent of direction of rotation)
- Gas-lubricated

Advantages

- Contact free operation
- Face-to-face
- Cartridge unit
- Does not open in the event of buffer pressure failure
- Self closing at pressure reversal
- No additional complex components to dissipate frictional heat

Operating range (see note on page 1)

Shaft diameter: d_1 = 30 ... 100 mm (1.18" ... 3.94")
(please inquire about dimensions)
Product pressure: p_1 = max. 22 bar (319 PSI),
max. ... 7 bar (102 PSI) with U-grooves
(dependent on shaft diameter and sliding materials)
Barrier pressure: p_3 = max. 25 bar (362 PSI),
10 bar (145 PSI) with U-grooves
Differential pressure: Δp = min. 3 bar (44 PSI)
Temperature: t = –20 °C ... +170 °C (–4 °F ... +338 °F)
(dependent on resistance of O-Rings)
Sliding velocity: v_g = 16 m/s (52 ft/s),
with special design max. 25 m/s (82 ft/s)
Axial movement: ±0.2 mm

Materials

Seal faces: Carbon graphite (A)
Seat: Silicon carbide (Q1, Q2)
Secondary seals: FKM (V), EPDM (E), FFKM (K)
Springs: Hastelloy® C-4 (M)
Metal parts: CrNiMo steel (G), Hastelloy® C-4 (M)

Item	Description
1, 2	Seal face
3, 4, 8, 10, 13	O-Ring
5, 6	Spring
7	Seat
9	Shaft sleeve
11	Flange
12	Gasket
14	Cover
15, 22, 25	Countersunk screw
16	Retaining ring
17	Pin
18	Ring
19	Set ring
20	Set screw
21	Pumping ring
23	V-Seal
24	Assembly fixture

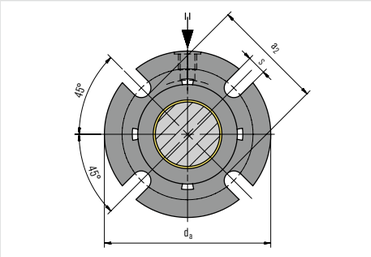

Seal cover

Recommended applications

- Chemical industry
- Refining technology
- Gases and liquids
- Media which require high purity
- Environmental harmful media
- Blowers
- Fans
- Pumps

Dimensions in mm

	d_1	d_2	$d_{3min.}$	$d_{3max.}$	l_1	l_2	l_3	l_4	da	a_2	s
GSO-DN/30-00-R	30	46	49	59	85	55	30	39	104	69.7	14
GSO-DN/33-00-R	33	49	53	65	85.5	55.5	30	39.5	122	72.7	14
GSO-DN/35-00-R	35	51	52	65	85.5	55.5	30	39.5	124	74.7	14
GSO-DN/43-00-R	43	63	64	78	90.5	57.5	33	41.5	138	84.7	16
GSO-DN/48-00-R	48	69	69	80	90.5	57.5	33	41.5	145	89.7	16
GSO-DN/50-00-R	50	70	72	82	90.5	57.5	33	41.5	147	91.7	16
GSO-DN/53-00-R	53	73	73	87	92.8	57.8	35	41.8	148	94.7	18
GSO-DN/60-00-R	60	85	87	102	97.5	60.5	37	44.5	157	104	18
GSO-DN/65-00-R	65	90	91	107	100.5	59.5	41	43.5	178	109	18

Other diameters on request.

HRGS-D

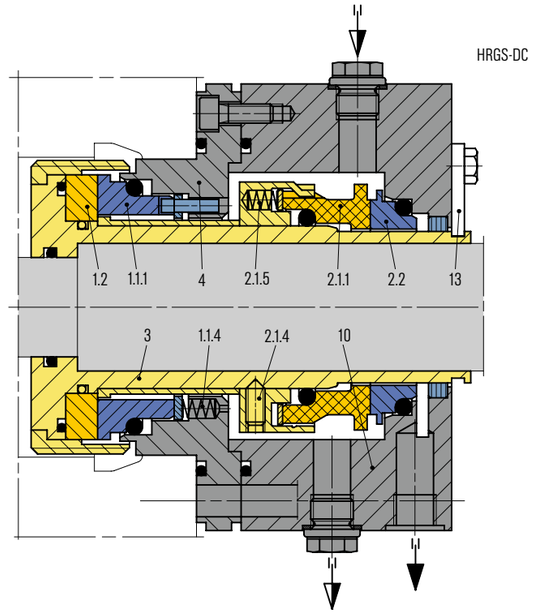

Features

- Double seal
- Balanced
- Standard version with U-grooves (bi-directional)
- Gas-lubricated

Advantages

- Contact-free operation
- Suitable for solids containing media
- Internally pressurized
- Cartridge unit
- Does not open in the event of buffer pressure failure, self closing at pressure reversal
- HR principle with rotating seat
- No friction on the seal faces, no heat generated at the seal or in the medium

Operating range (see note on page 1)

Shaft diameter: d_W = 20 ... 200 mm (1.10" ... 3.94")
Pressure HRGS-DC: p_1 = ... 22 bar (319 PSI),
p_3 = ... 25 bar (363 PSI)
Pressure HRGS-DD: p_1 = ... 40 bar (580 PSI),
p_3 = ... 43 bar (624 PSI)
Operating temperature limits for:
EPDM –20 °C ... +140 °C (–4 °F ... +284 °F)
FFKM –20 °C ... +120 °C (–4 °F ... +248 °F)
FKM –20 °C ... +170 °C (–4 °F ... +338 °F)
Sliding velocity: v_g = 4 ... 25 m/s (13 ... 82 ft/s)
Differential pressure Δp = min. 3 bar (44 PSI),
max. 16 bar (232 PSI) (internal pressure)

Materials

Product side (HRGS-DC, HRGS-DD):
Seal face: Silicon carbide (Q19, Q29)
Seat: Silicon carbide (Q1, Q2)

Atmosphere side HRGS-DC:
Seal face: Carbon graphite antimony impregnated (A),
Carbon graphite resin impregnated (B)
Seat: Silicon carbide (Q1, Q2)

Atmosphere side HRGS-DD:
Seal face: Silicon carbide (Q19, Q29)
Seat: Silicon carbide (Q1, Q2)

Springs: CrNiMo steel (G), Hastelloy® C-4 (M)
Metal parts: CrNiMo steel (G), Hastelloy® C-4 (M)

Recommended applicationss

- Chemical industry
- Refining technology
- Gases and liquids
- Media which require high purity
- Environmental harmful media
- Pumps

Product variants

HRGS-DC
Gas-buffered double seal. The HRGS-DC is designed for applications involving fitting dimensions in line with DIN 24960 C or ANSI Big Bore standard, but can also be used even when the fitting dimensions are not of standardized nature if large, open spaces are available for installation. The CGSH is used as outboard seal up to nominal width 125.

HRGS-DD
Acc. to API 682 configuration 3NC-FB, Plan 74. The HRGS-DD corresponds to the HRGS-DC in terms of design principal and materials. It is designed for applications involving large shaft diameters of up to 200 mm (7.87") or fairly high pressure levels of up to 40 bar (580 PSI). The outboard seal used in such cases is the DGS.

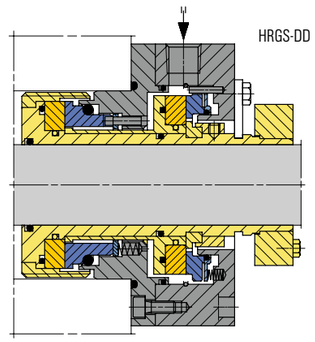

Item	Part no. to DIN 24250	Description
1.1.1	472.1	Seal face
1.1.4	477	Spring
1.2	475.1	Seat
2.1.1	472.2	Seal face
2.1.4	485	Drive collar
2.1.5	477	Spring
2.2	475.2	Seat
3	523	Shaft sleeve
4	513	Insert
10	441	Housing
13		Assembly fixture

Dimensions

Dimensions on request

NF992

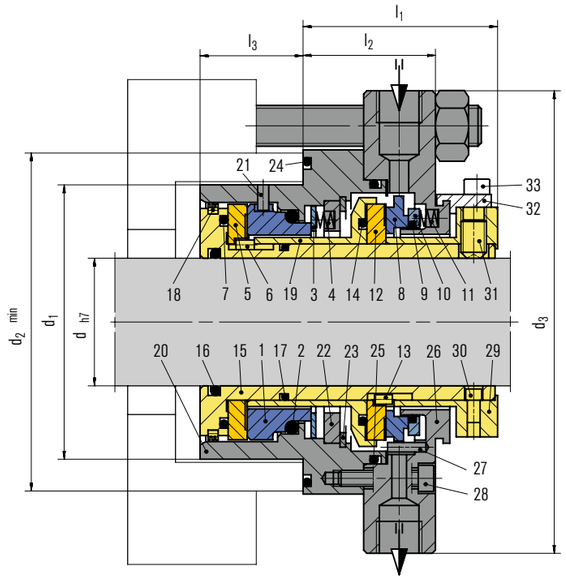

Features

- Cartridge
- Balanced
- Bidirectional
- Gas-lubricated, gas-buffered

Operating range (see note on page 1)

Pressure: p = vacuum ... 16 bar (... 232 PSI)
Temperature: t = –20 °C ... +160 °C (–66 °F ... +320 °F)
Sliding velocity: 20 m/s (66 tf/s)
Viscosity: ... 300 mPa·s
Solids content: ... 20 %

Materials

Seal face: Silicon carbide (Q1), High density carbon graphite
Seat: Silicon carbide (Q1)
Secondary seals: FKM (V)
Metal parts: 1.4401 (G)

Recommended applications

- Chemical industry
- Refining technology
- Hazardous media
- Monomeres
- Monomere pumps

Item	Description
1, 8	Seal face
2, 7, 9, 14, 16, 17, 24, 25	O-Ring
3, 10	Trust ring
4, 11	Spring
5, 12	Seat
6, 13, 21, 27, 30	Pin
15	Shaft sleeve
18	Labyrinth
19	Adapter sleeve
20, 26	Housing
22	Adapter
23	Retaining ring
28, 33	HSH cap screw
29	Clamping sleeve
31	Set screw
32	Assembly fixture

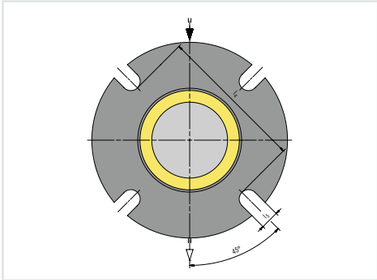

Seal cover

Dimensions in mm

d	d_1	$d_{2min.}$	d_3	l_1	l_2	l_3	l_4	l_5
25	62	76	118	49	31.5	38	76	12
30	67	81	118	49	31.5	38	81	12
35	72	86	128	52	32.5	41	86	14
40	77	91	138	52	32.5	41	91	14
45	82	96	138	52	32.5	41	96	14
50	90	107	164	54	34.5	43	107	18
55	95	112	164	54	34.5	43	112	18
60	100	117	178	54	34.5	43	117	18
65	105	122	193	54	34.5	43	122	18
70	110	127	193	54	34.5	43	127	18
75	118	132	208	56	34.5	43	132	20
80	123	137	208	56	34.5	43	137	20
85	128	142	218	56	34.5	43	142	20
90	133	147	218	56	34.5	43	147	20
95	138	152	228	56	34.5	43	152	20
100	145	157	228	56	34.5	43	157	20

SeccoMix®

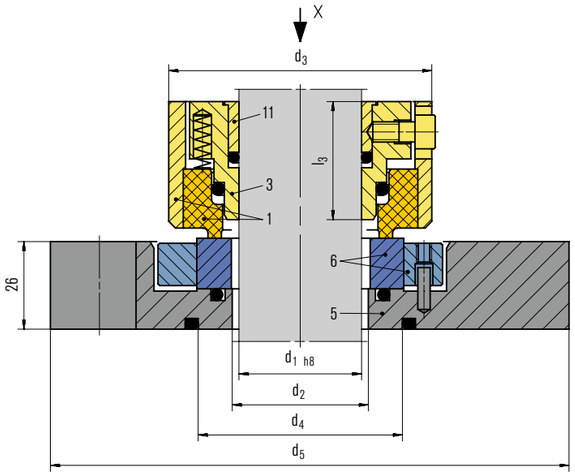

Features

- For top entry drives, on request side drive possible
- Dry-running
- Single and double seals
- Balanced
- Outboard
- Multiple springs rotating
- Independent of direction of rotation

Advantages

- Available as components or as cartridge units
- Suitable for pressure reversals
- Due to the hydraulic conditions, product pressure as well overlaying barrier pressure closes the seal
- Friction-locked connection to the shaft
- Connections for steel (SeccoMix® 481) and glass-lined (SeccoMix® 461) reactors are available to DIN 28138 standards or as required
- Available also for lateral drives, please inquire
- ATEX certification available on request

Operating range (see note on page 1)

Shaft diameter: d_1 = 25 ... 160 mm (0.98" ... 6.30")
Pressure: p_1 = vacuum ... 6 bar (87 PSI)
Temperature: t_1 = −20 °C ... +150 (250*) °C
(−4 °F ... +302 (482*) °F)
Sliding velocity: v_g = 0 ... 2 m/s (0 ... 6 ft/s)
Axial movement: ±1.5 mm
Radial movement: ±1.5 mm

* With cooling flange
For applications beyond this range, please inquire.

Item	Description
1	Seal face with seal face housing
3	Drive collar
5	Flange
6	Seat with seat housing
11	Clamping ring

Materials

Seal face: Carbon graphite, FDA conform
Seat: Silicon carbide
Secondary seals and metal parts according to application and customer's specifications.

Standards and approvals

- Material approvals: FDA
- ATEX
- DIN 28136 (for steel vessels)
- DIN 28141 (flange connection for steel vessels)
- DIN 28154 (shaft end for steel vessel)
- DIN 28136 (for glass-lined vessels)
- DIN 28137 T2 (flange connection for glass-lined vessels)
- DIN 28159 (shaft end for glass-lined vessels)

Notes

Stationary seat alternatives available on request.

Options:
- Cooling or heating flange
- Flush
- Polymerization barrier

See page 259.

Recommended seal supply

Gas supply EagleBurgmann GSS4016/A ... for double seals SeccoMix® 481 ... D .. and SeccoMix® 461 ... D ..

Recommended applications

- Chemical industry
- Pharmaceutical industry
- Food and beverage industry
- Non-toxic media with single seal
- Toxic media with double seal
- Agitators
- Reactors

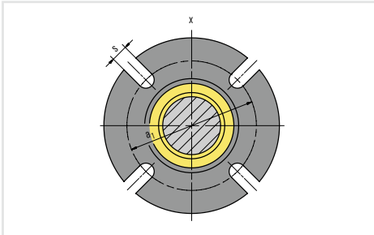

Seal flange

Product variants

SeccoMix®-11
The SeccoMix®-11 is equipped in addition with a sleeve for trapping any abraded particles from the seal face. Contamination of the medium in the container is thus ruled out. The sleeve can be cleaned through a flushing bore. Please note: diameters (d_2 to d_5) increase to the next possible design size.

SeccoMix® 481
Single seal. Dimensions see page 121

SeccoMix® 481L
Single seal with integrated floating bearing.

SeccoMix® 451
All types of the SeccoMix® 481 range available for unstepped shafts (all diameters). Seal identification: SeccoMix® 451 ... Customized design or e. g. different drives (torque transmissions) are available.

SeccoMix® 461/(491)
For glass-lined vessels. Dimensions see page 123

SeccoMix® 481-D
Double seal

SeccoMix® 481L-D
Double seal with integrated floating bearing

These seals are designed to be self-closing on the product side, i.e. they will remain closed even with pressure variations or a pressure reversal. Operation is optionally the same as for the single version. In view of the mechanical seal on the atmosphere side it can be used as a buffer pressurized double seal . The barrier pressure should be 0.5 ... 1.0 bar (7.25 ... 15 PSI) above pressure to be sealed.

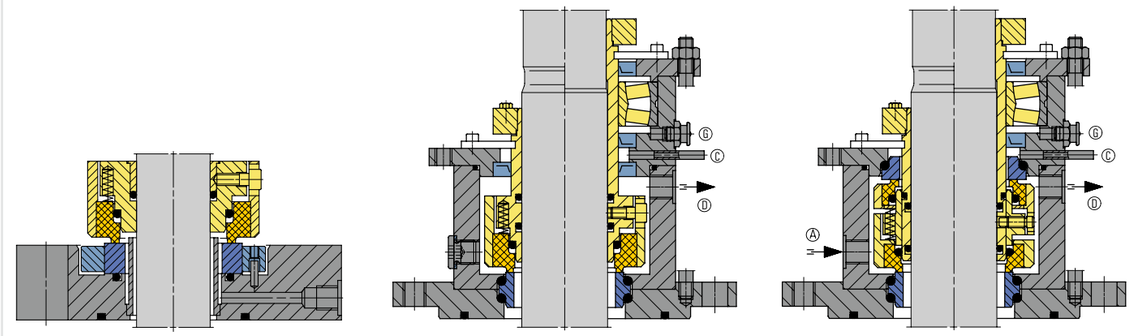

Dimensions in mm

d_1 (mm)	d_1 (inch)	d_2	d_3	d_4	d_5	l_2	l_3	$a_{1(min)}$	$a_{1(max)}$	s
25	1.000	34	68	–	148	41.5	40.5	100	132	11
28	1.125	34	68	55	148	41.5	40.5	100	132	11
30	–	34	68	55	148	41.5	40.5	100	132	11
32	1.250	39	73	60	153	41.5	40.5	105	137	11
35	1.375	39	73	60	153	41.5	40.5	105	137	11
38	1.500	44	78	65	158	41.5	40.5	110	142	11
40	–	44	78	65	158	41.5	40.5	110	142	11
45	1.625	49	83	68	163	41.5	40.5	115	152	11
–	1.750	49	83	68	163	41.5	40.5	115	152	11
48	1.875	54	88	73	178	41.5	40.5	125	160	14
50	–	54	88	73	178	41.5	40.5	125	160	14
55	2.000	59	93	78	183	41.5	40.5	130	165	14
–	2.125	59	93	78	183	41.5	40.5	130	165	14
60	2.250	64	98	85	188	41.5	40.5	135	170	14
65	2.375	69	103	90	193	44.5	40.5	140	175	14
–	2.500	69	103	90	193	44.5	40.5	140	175	14
70	2.625	74	108	95	198	44.5	43.5	145	180	14
–	2.750	74	108	95	198	44.5	43.5	145	180	14
75	2.875	79	113	100	203	44.5	43.5	150	185	14
80	3.000	84	118	105	208	44.5	43.5	155	190	14
85	3.250	89	123	110	213	44.5	43.5	160	195	14
90	3.500	94	128	115	218	44.5	43.5	165	200	14
95	3.750	99	133	120	223	44.5	43.5	170	205	14
100	–	104	138	125	228	44.5	43.5	175	210	14
105	4.000	109	143	130	233	44.5	43.5	180	215	14
110	4.250	114	148	135	238	44.5	43.5	185	220	14
115	4.500	119	153	140	267	44.5	43.5	196	243	18
125	4.750	129	163	150	277	44.5	43.5	206	253	18
140	5.000	144	178	165	297	44.5	43.5	221	273	18
–	5.250	144	178	165	297	44.5	43.5	221	273	18
–	5.500	144	178	165	297	44.5	43.5	221	273	18
150	5.750	154	188	175	307	44.5	43.5	231	283	18
160	6.000	164	198	185	317	44.5	43.5	241	293	18
–	6.250	164	198	185	317	44.5	43.5	241	293	18

AD510/AD520

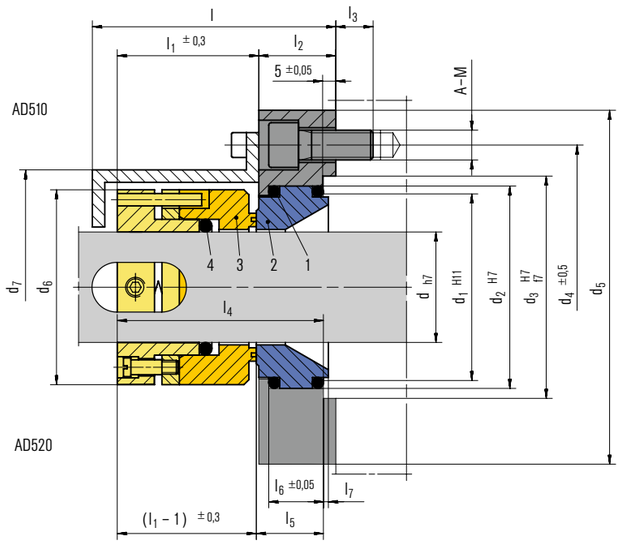

Features

- Dry running
- Single seal
- Independent of direction of rotation

Advantages

- AD510 includes housing

Operating range (see note on page 1)

Vessel pressure: p = vacuum (7 mbara) ... 5 bar (73 PSI)
Vessel temperature: t = –30 °C ... +175 °C
(–22 °F ... +347 °F)
Sliding velocity: v_g = max. 1.0 m/s (3 ft/s)
Allowable gas consumption: 2 Nl/h

Item	Description
1	O-Ring
2	Seat
3	Seal face
4	O-Ring

Materials

Seal face: PTFE, Carbon fiber and glass fiber reinforced
Seat: Silicon carbide (Q1), Aluminium oxide (V)

Recommended applications

- Chemical industry
- Food and beverage industry
- Reactors
- Polymerization agitators
- Mixers

Product variant

AD520

Dimensions in mm

d	d_1	d_2	d_3	d_4	d_5	d_6	d_7	l	l_1	l_2	l_3	l_4	l_5	l_6	l_7	A-M
20	36	42	50	70	90	46	60	77	44	24	11	63	20	16	2	4-M8
25	41	47	55	75	95	51	65	77	44	24	11	63	20	16	2	4-M8
30	46	52	60	80	100	56	70	77	44	24	11	63	20	16	2	4-M8
35	51	57	65	85	105	61	75	77	44	24	11	63	20	16	2	4-M8
40	60	66	75	95	120	70	85	82	47	26	12	68	22	18	2	4-M10
45	65	71	80	100	125	75	90	82	47	26	12	68	22	18	2	4-M10
50	70	76	85	105	130	80	95	82	47	26	12	68	22	18	2	8-M10
55	75	81	90	110	135	85	100	82	47	26	12	68	22	18	2	8-M10
60	85	91	100	120	145	92	110	89	51	28	12	74	24	20	2	8-M10
65	90	96	105	125	150	97	115	89	51	28	12	74	24	20	2	8-M10
70	95	101	110	130	155	102	120	91	51	30	12	76	26	21	2	8-M10
75	104	110	120	140	165	109	130	91	51	30	12	76	26	21	2	8-M10
80	109	115	125	150	178	114	130	98	57	31	15	83	27	22	2	8-M12
85	114	120	130	155	183	120	140	98	57	31	15	83	27	22	2	8-M12
90	119	125	135	160	188	124	140	98	57	31	15	83	27	22	2	8-M12
95	124	130	140	165	193	130	150	98	57	31	15	83	27	22	2	8-M12
100	129	135	145	170	198	134	150	98	57	31	15	83	27	22	2	8-M12
105	134	140	150	175	203	140	160	98	57	31	15	83	27	22	2	8-M12
110	139	145	155	180	208	146	165	98	57	31	15	83	27	22	2	8-M12
120	150	160	170	200	236	160	180	110	63	37	20	95	33	27	3	8-M16
130	160	170	180	210	246	170	190	110	63	37	20	95	33	27	3	8-M16
140	175	185	195	225	260	180	200	110	63	37	20	95	33	27	3	8-M16
150	190	200	210	240	276	200	225	136	85	40	20	120	36	30	3	8-M16
160	200	210	220	250	286	210	230	136	85	40	20	120	36	30	3	8-M16
170	210	220	230	260	296	220	250	136	85	40	20	120	36	30	3	8-M16
180	220	230	240	270	306	230	250	136	85	40	20	120	36	30	3	8-M16

AGSZ

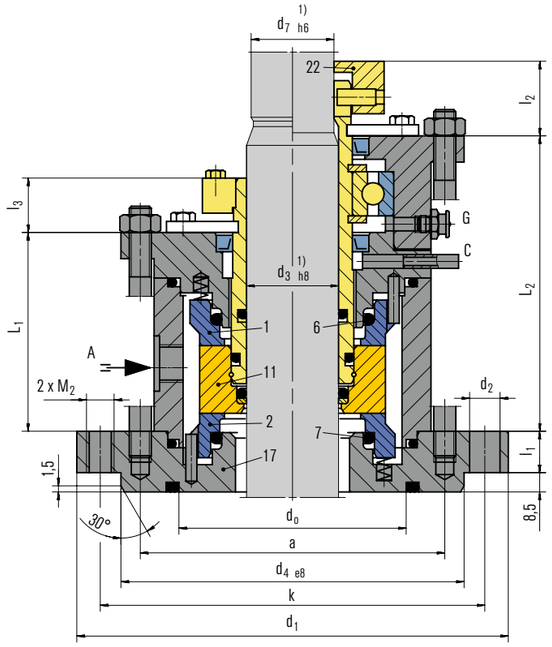

Features

- For top entry drives
- Gas-lubricated
- Double seal
- Balanced
- Independent of direction of rotation

Advantages

- Centrally arranged rotating seat
- Torque transmission by clamping ring for large axial movements
- No friction on the seal faces, no heat generated at the seal or in the medium
- Contact-free running
- Ready-to-fit and factory-tested unit

Operating range (see note on page 1)

Shaft diameter: d_3 = 40 ... 220 mm (1.6" ... 8.7")
Pressure p_1 = vacuum ... 6 bar (87 PSI),
$\Delta p_{min.}$ = 3 bar (44 PSI), p_3 = 9 bar (131 PSI)
Temperature: t_1 = –20 °C ... +150 °C (–4 °F ... +302 °F), with cooling flange 250 °C (482 °F)
Sliding velocity: v_g = 0 ... 10 m/s (0 ... 33 ft/s)

Materials

Seal face and seat: Silicon carbide

Standards and approvals

- Material approvals: FDA
- DIN 28136 (for steel vessels)
- DIN 28141 (flange connection for steel vessels)
- DIN 28154 (shaft end for steel vessel)
- DIN 28136 (for glass-lined vessels)
- DIN 28137 T2 (flange connection for glass-lined vessels)
- DIN 28159 (shaft end for glass-lined vessels)

Item	Description
1	Seal face (Q19, atmosphere side)
2	Seal face (Q1), product side
6,7	O-Ring
11	Seat (Q1)
17	Flange
22	Clamping ring

Notes

Options:
- Cooling or heating flange
- Flush
- Polymerization barrier

See page 259.

Recommended seal supply

Connection to the gas network (or cylinder) with an upstream gas supply and control system EagleBurgmann GSS4012/A200-D1 with alarm FIAH, FIAL and PIAL, together with two flow meters for a large measuring range. Required minimum pressure difference: 3 bar (44 PSI).

Recommended applications

- Chemical industry
- Food and beverage industry
- Pharmaceutical industry
- Gases and liquids
- Media which require high purity
- Environmental harmful media with double seals
- Agitators

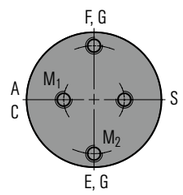

Supply connections

Designation and positions of supply connections, pull-off and jacket threads acc. to DIN 28138 T3.

A Barrier gas IN
C Leakage
E Cooling IN
F Cooling OUT
S Flush
G Grease

Product variants

AGSZ481K(L)-D
Double seal (with integrated bearing) for steel vessels to DIN 28136, connection flange to DIN 28141 and shaft ends to DIN 28154.

AGSZ461K(L)-D
Double seal (with integrated bearing) for glass-lined vessels to DIN 28136, connection flange to DIN 28137 and shaft ends to DIN 28159.

AGSZ451K(L)-D
Version with special connection dimensions or unstepped shafts. For steel vessels.

AGSZ491K(L)-D
Variant with special connection dimensions for glass-lined vessels.

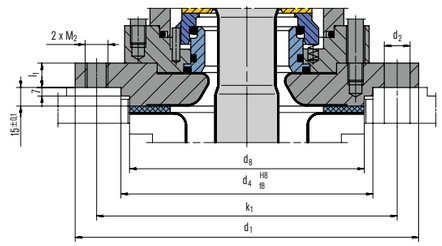

AGSZ481K(L)-D

Flange connection acc. to DIN 28137 T2 for nominal diameters 40 ... 100.

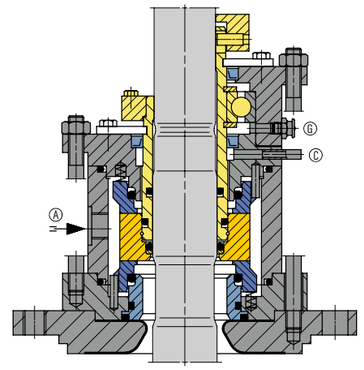

AGSZ461K(L)-D

Flange connection acc. to DIN 28137 T2 for nominal diameters 125 ... 161.

Torque transmissions

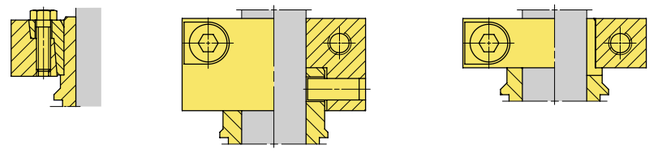

Shrink disk | **Clamping ring with pin** | **Clamping ring**

AGSZ481 – Dimensions in mm

d_3 1)	d_7 1)	d_1	n x d_2	d_4	d_0	k	L_1	L_2	Lw 1)	l_1	l_2	l_3	a	M_1	M_2	A
40	38	175	4x18	110	90	145	81	137	143	15	35	28	122	M12	M16	G3/8
50	48	240	8x18	176	135	210	82.5	130.5	148	17	42	28	155	M12	M16	G3/8
60	58	240	8x18	176	135	210	78.5	128	158	18	39	28	176	M12	M16	G3/8
80	78	275	8x22	204	155	240	94.5	146	168	20	50	34	203	M16	M20	G1/2
100	98	305	8x22	234	190	270	95	156.5	178	20	56.5	34	228	M16	M20	G1/2
125	120	330	8x22	260	215	295	95	163.5	203	20	60	39	268	M20	M20	G1/2
140	135	395	12x22	313	250	350	97	168.5	208	20	82	41	285	M20	M20	G1/2
160	150	395	12x22	313	265	350	97	176.5	213	25	81	41	302	M20	M20	G1/2
180	170	445	12x22	364	310	400	–	–	233	25	–	–	332	M24	M20	G1/2
200	190	445	12x22	364	310	400	–	–	243	25	–	–	352	M24	M20	G1/2
220	210	505	16x22	422	340	460	–	–	263	25	–	–		M24	M20	G1/2

1) Shaft diameters d_3 and d_7 to DIN 28154

AGSZ461 – Dimensions in mm

d_3 1)	d_7 1)	Nominal size	Flange size 2)	d_1	n x d_2	d_4	n x d_5	d_6	d_7	k_1	k_2	L_1	L_2	l_1	l_2	l_3	l_4	l_5	M_1	M_2	A,B
40	38	40	E125	175	4x18	110	–	–	102	145	–	142	184	25	35	28	50	50	M12	M16	G3/8
50	48	50	E200	240	8x18	176	–	–	138	210	–	147	195	25	40	28	50	50	M12	M16	G3/8
60	58	60	E250	275	8x22	204	–	–	188	240	–	158	203	25	42	28	50	60	M12	M20	G3/8
80	78	80	E300	305	8x22	234	–	–	212	270	–	170	240	30	45	34	60	60	M16	M20	G1/2
100	98	100	E400	395	12x22	313	–	–	268	350	–	177	240	30	52	34	60	60	M16	M20	G1/2
100	98	100	E500	395	12x22	313	–	–	268	350	–	177	240	30	52	34	60	60	M16	M20	G1/2
125	120	125	E700	505	4x22	422	12x22	320	306	460	350	208	266	30	75	40	60	80	M20	M20	G1/2
140	135	140	E700	505	4x22	422	12x22	320	306	460	350	223	282	30	79	40	60	80	M20	M20	G1/2
160	150	160	E900	505	4x22	422	12x22	320	306	460	350	228	282	30	77	40	60	85	M20	M20	G1/2
160	150	161	E901	565	4x26	474	12x22	370	356	515	400	228	282	30	77	40	60	85	M20	M20	G1/2

1) Shaft diameters d_3 and d_7 to DIN 28159
2) Flange size to DIN 28137T2

AGSR

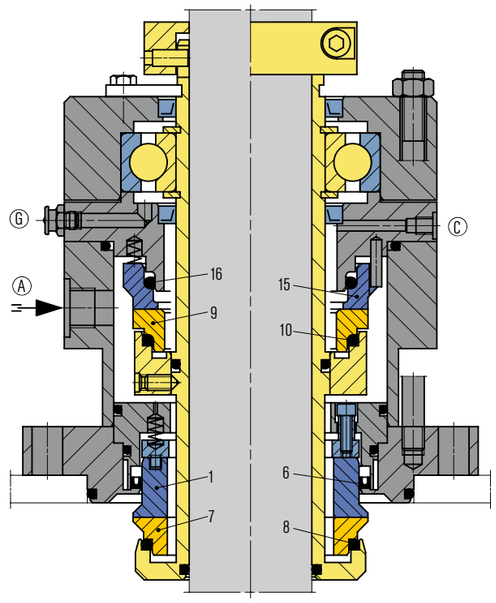

Features

- For top, bottom and side entry drives
- Gas-lubricated
- Double seal
- Balanced
- Stationary springs on product side
- Independent of direction of rotation

Advantages

- Torque transmission by clamping ring for large axial movements
- No friction on the seal faces, no heat generated at the seal or in the medium
- Variant for sterile applications available
- Ready-to-fit and factory-tested unit

Operating range (see note on page 1)

Shaft diameter: d_3 = 20 ... 200 mm (0.8" ... 7.9")
Pressure: p_1 = ... 6 bar (87 PSI), $\Delta p_{min.}$ = 3 bar (44 PSI), p_{3max} = 9 bar (131 PSI)
Temperature: t_1 = –30 (–80) °C ... +150 °C (–22 (–112) °F ... +302 °F)
Sliding velocity: v_g = 0 ... 10 m/s (0 ... 33 ft/s)

Standards and approvals

- Material approvals: FDA

Item	Description
1	Seal face
6	Sealing ring
7	Seat
8	O-Ring
9	Seal face
10	O-Ring
15	Seat
16	O-Ring

Materials

Seal face and seat: Silicon carbide

Notes

Option:
- Flush

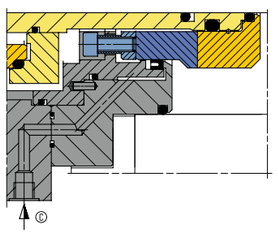

Flushing the AGSR. Especially when the seal is operated in lateral or bottom drives, an optional flush on the product side enhances operational safety.

Recommended applications

- Chemical industry
- Food and beverage industry
- Pharmaceutical industry
- Pasty media
- Dry media
- Mixers
- Dryers
- Special rotating equipment

Dimensions

Dimensions on request

Recommended seal supply

Connection to the gas network (or cylinder) with an upstream gas supply and control system EagleBurgmann GSS4012/A200-D1 with alarm FIAH, FIAL and PIAL, together with two flow meters for a large measuring range. Required minimum pressure difference: 3 bar (44 PSI).

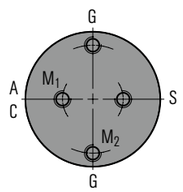

Supply connections

A	Barrier gas IN
C	Leakage
G	Grease
S	Flush

Product variants

AGSR5(L)-D
Double seal (with floating bearing for the shaft). If the seal has to run in the product, please inquire.

AGSR3(L)-D
Double seal (with floating bearing for the shaft) for sterile applications. The dead-space-free design with polished surfaces on the product side meets the requirements for sterile processes.

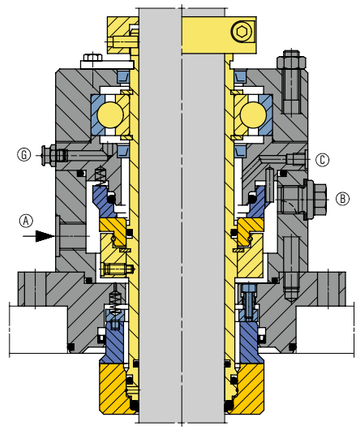

Torque transmissions

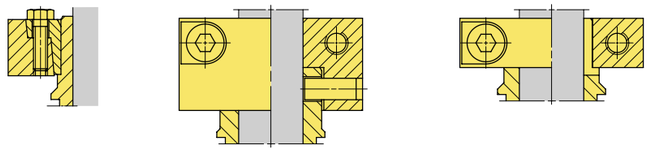

Shrink disk | **Clamping ring with pin** | **Clamping ring**

ERB

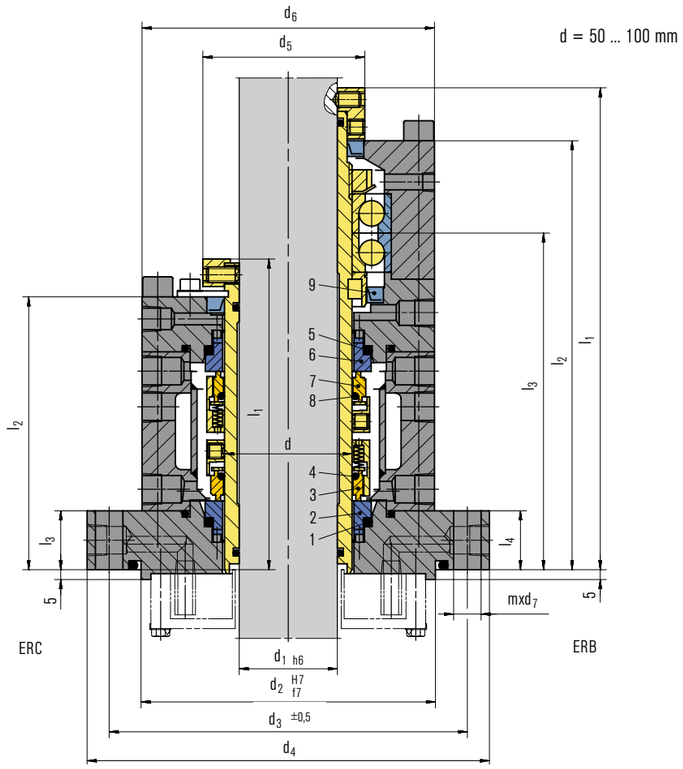

Features

- Cartridge
- Double seal with integrated bearing
- Unbalanced
- Independent of direction of rotation

Operating range (see note on page 1)

Pressure: p = vacuum ... 10 bar (145 PSI)
Temperature: t = –30 °C ... +200 °C
(–22 °F ... +392 °F)
Rotational speed: = max. 200 min^{-1}
Axial movement: max. 0.3 mm

Materials

Diameter 50 ... 100 mm:
Seal faces: Carbon graphite resin impregnated (B)
Seat: Silicon carbide (Q1), Tungsten carbide (U1),
Chromium oxide coated

Diameter 110 ... 200 mm:
Seal faces: Silicon carbide (Q1), Tungsten carbide (U1),
Chromium oxide coated
Seats: Carbon graphite resin impregnated (B),
Silicon carbide (Q1), Tungsten carbide (U1)

Notes

Options:
Cooling jacket on the vessel side flange. Please inquire.

Recommended applications

- Chemical industry
- Food and beverage industry
- Reactors
- Polymerization agitators
- Mixers

Item	Description
1	O-Ring
2	Seat
3	Seal face
4	O-Ring
5	O-Ring
6	Seat
7	Seal face
8	O-Ring
9	Shaft seal

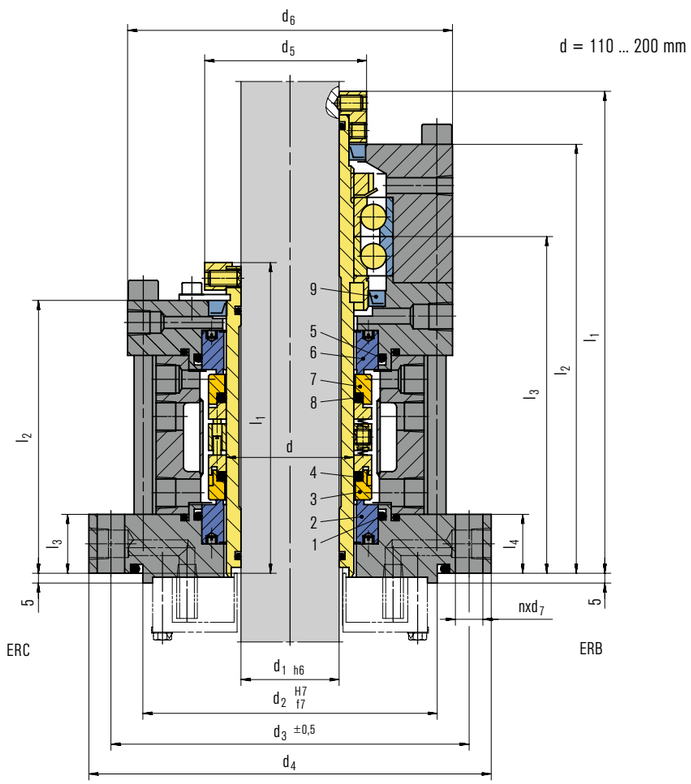

Torque transmissions

Set screw with cone point for diameter d_1 > 120 mm and/ or vessel pressure p > 1 barg

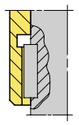

Drive key

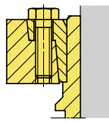

Shrink disk

ERB – Dimensions in mm

d	d_1	d_2	d_3	d_4	d_5	d_6	d_7	l_1	l_2	l_3	l_4	n	Bearing Type
50	35	135	170	195	61	134	14	268	237	185	30	8	#7210ADB
60	45	145	180	205	75	144	14	283	252	197	30	8	#7212ADB
70	55	155	190	215	85	154	14	293	262	205	30	8	#7014ADB
80	65	165	200	225	95	164	14	303	272	207	30	8	#7016ADB
90	75	175	210	235	105	174	14	323	287	219	30	8	#7018ADB
100	85	185	220	245	115	184	14	323	287	219	30	8	#7020ADB
110	95	205	240	265	125	218	14	333	291	216	30	8	#7022ADB
120	105	215	261	289	135	235	19	371	309	233	35	12	#7024ADB
130	110	225	271	299	145	245	19	364	322	238	35	12	#7026ADB
140	120	235	281	309	159	255	19	369	322	238	35	12	#7028ADB
150	130	280	335	375	169	295	23	424	377	288	45	12	#7030ADB
160	140	290	345	385	179	305	23	433	386	291	45	12	#7032ADB
170	150	300	355	395	189	315	23	452	400	295	45	12	#7034ADB
180	160	310	365	405	199	328	23	458	406	299	45	12	#7036ADB
190	170	320	375	415	209	338	23	473	416	309	45	12	#7038ADB
200	180	330	390	430	219	358	23	483	426	312	45	12	#7040ADB

ERC – Dimensions in mm

d	d_1	d_2	d_3	d_4	d_5	d_6	d_7	l_1	l_2	l_3	n
50	35	135	170	195	66	134	14	162	144	30	8
60	45	145	180	205	76	144	14	175	157	30	8
70	55	155	190	215	86	154	14	186	168	30	8
80	65	165	200	225	96	164	14	186	168	30	8
90	75	175	210	235	110	174	14	198	178	30	8
100	85	185	220	245	120	184	14	198	178	30	8
110	95	205	240	265	130	218	14	200	173	30	8
120	105	215	261	289	140	235	19	217	190	35	12
130	110	225	271	299	154	245	19	222	190	35	12
140	120	235	281	309	164	255	19	222	190	35	12
150	130	280	335	375	174	295	23	261	229	45	12
160	140	290	345	385	184	305	23	263	231	45	12
170	150	300	355	395	194	315	23	263	231	45	12
180	160	310	365	405	204	328	23	263	231	45	12
190	170	320	375	415	214	338	23	273	241	45	12
200	180	330	390	430	224	358	23	277	245	45	12

M481

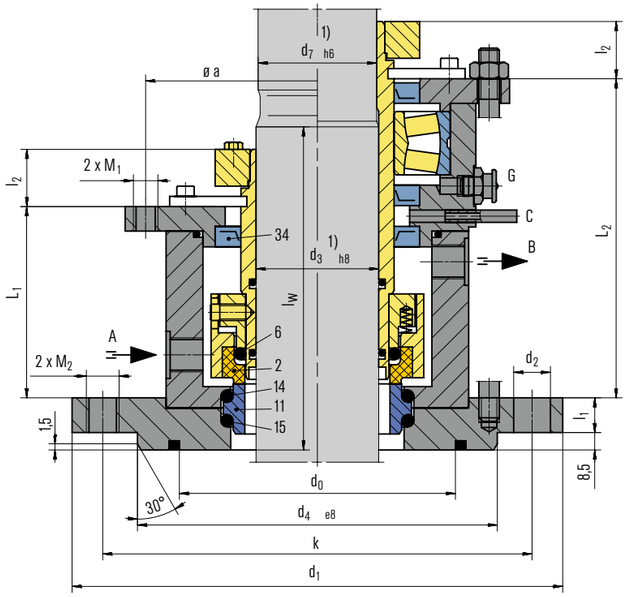

Features

- For top entry drives, type M481 to DIN
- Single or double seals
- Unbalanced
- Independent of direction of rotation
- Multiple springs rotating
- Liquid-lubricated
- Cartridge unit

Advantages

- Ready-to-fit and factory-tested units
- Available with or without floating bearing
- Suitable for standardizations
- FDA certification
- Double seals can be applied at higher pressure and rotating speed than specified by DIN
- Due to the hydraulic conditions, product pressure as well overlaying barrier pressure closes the seal.

Operating range (see note on page 1)

DIN 28138 T2
Shaft diameter: d_3 = 40 ... 220 mm (1,57" .... 8,66")

Single seals:
Pressure: p_1 = vacuum ... 6 bar (87 PSI),
p_3 = pressureless
Temperature: t_1* = –40 °C ... +150 (250) °C
(–40 °F ... +302 (482) °F)

Double seals:
Pressure: p_1 = vacuum ... 16 bar (232 PSI),
p_3 = max. 18 bar (261 PSI)
Temperature: t_1* = –40 °C ... +200 (350) °C
(–40 °F ... +392 (662) °F)

Sliding velocity: v_g = 0 ... 5 m/s (0 ... 16 ft/s)
For applications beyond this range, please inquire.
* Higher or lower temperatures on request.

Materials

According to application and customer's specification

Item	Description
1	Seal face, atmosphere side
2	Seal face, product side
6	O-Ring
7	O-Ring
11	Seat, product side
12	Seat, atmosphere side
13	O-Ring
14	O-Ring
15	O-Ring
34	Shaft seal

Standards and approvals

- Material approvals: FDA
- DIN 28136 (for steel vessels)
- DIN 28141 (flange connection)
- DIN 28154 (shaft end)

Recommended seal supply

Closed circuit EagleBurgmann TS system, open circuit EagleBurgmann SPA, EagleBurgmann SPN

Recommended applications

- Chemical industry
- Pharmaceutical industry
- Non-toxic media with single seal
- Toxic media with double seal
- Agitators
- Reactors

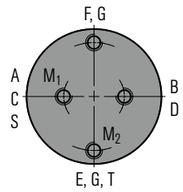

Supply connections

Designation and position acc. to DIN 28138 T3.

A	Barrier fluid resp. quench IN
B	Barrier fluid resp. quench OUT
C	Drainage
D	Leakage drain G1/8"
E	Cooling IN G3/8"
F	Cooling OUT G3/8"
G	Grease
S	Flush
T	Temperature metering

For reasons of standardization, the supply connections of single seals are matched to those of the double seals (in deviation from DIN 28138T3).

Notes

Options:
- Cooling or heating flange
- Leakage drain, flush or heating flange
- Leakage drain or flush
- Polymerization barrier, leakage drain or flush

See page 259.

Product variants

M481K
Single seal

M481KL
Single seal with integrated floating bearing.

Operation of single seals only with pressureless quench.

M481K-D
Double seal

M481KL-D
Double seal with integrated floating bearing.

These seals are designed to be self-closing on the product side, i.e. they will remain closed even with pressure variations or a pressure reversal. Operation is optionally the same as for the single version (p_{max} = 6 bar (87 PSI) or Δp_{max} = 6 bar at $p_1 > p_3$). In view of the mechanical seal on the atmosphere side it can be used as a buffer pressurized double seal p_1 = 16 bar (232 PSI).

M451
All types of the M481 range available for unstepped shafts (all diameters). Seal identification: M451 ... Customized design or e. g. different drives (torque transmissions) are available.

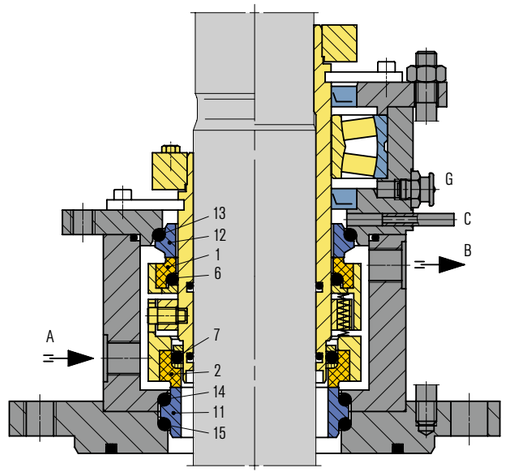

M481K(L)-D

Torque transmissions

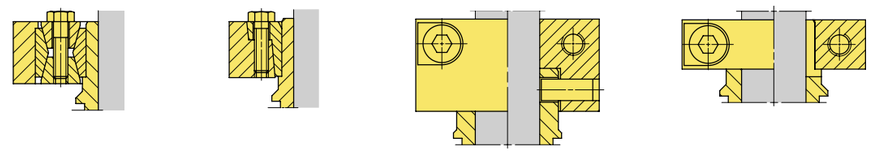

Clamping set | **Shrink disk** | **Clamping ring with pin** | **Clamping ring**

Dimensions in mm

d_3 1)	d_7 1)	d_1	n x d_2	d_4	d_0	k	L_1	L_2	L_w 2)	l_1	l_2	a	M_1	M_2	A, B
40	38	175	4 x 18	110	90	145	87	136	143	15	28	122	M12	M16	G3/8
50	48	240	8 x 18	176	135	210	89	149	148	17	28	157	M12	M16	G3/8
60	58	240	8 x 18	176	135	210	93.5	156	158	17	28	168	M12	M16	G3/8
80	78	275	8 x 22	204	155	240	104.5	189	168	20	34	203	M16	M20	G1/2
100	98	305	8 x 22	234	190	270	109	190	178	20	34	228	M16	M20	G1/2
125	120	330	8 x 22	260	215	295	110	205	203	20	40	268	M20	M20	G1/2
140	135	395	12 x 22	313	250	350	124	222	208	20	40	285	M20	M20	G1/2
160	150	395	12 x 22	313	265	350	127.5	219.5	213	25	40	297	M20	M20	G1/2
180	170	445	12 x 22	364	310	400	132.5	230	233	25	45	332	M24	M20	G1/2
200	190	445	12 x 22	364	310	400	137.5	237.5	243	25	45	352	M24	M20	G1/2
220	210	505	16 x 22	422	340	460	149.5	249.5	263	25	50	381	M24	M20	G1/2

1) Shaft diameters d_3 and d_7 to DIN 28154
2) Shaft step to DIN 28154

M461

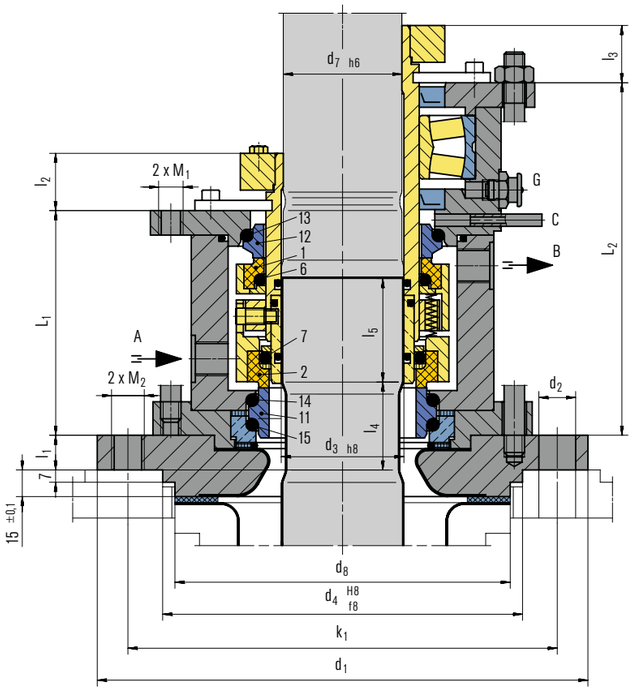

Features

- For top entry drives
- For glass-lined vessels, acc. to DIN 28138 T2
- Double seal, single seal on request
- Unbalanced
- Independent of direction of rotation
- Multiple springs rotating
- Cartridge unit

Advantages

- Ready-to-fit and factory-tested units
- Available with or without floating bearing
- Suitable for standardizations
- FDA certification
- Double seals can be applied at higher pressure and rotating speed than specified by DIN
- Due to the hydraulic conditions, product pressure as well overlaying barrier pressure closes the seal
- The seal can be lifted off the glass-lined flange ring as a complete cartridge. The sensitive glass lined flange remains mounted on the vessel.

Operating range (see note on page 1)

Shaft diameter: d_3 = 40 ... 160 mm (1.57" ... 6.30")
Pressure: p_1 = vacuum ... 16 bar (232 PSI),
p_3 = max. 18 bar (261 PSI)
Temperature: t_1 = –40 °C ... +200 (250) °C
(–40 °F ... +392 (482) °F)
Sliding velocity: v_g = 0 ... 5 m/s (0 ... 16 ft/s)
For applications beyond this range, please inquire.

Materials

According to application and customer's specification

Item	Description
1	Seal face, atmosphere side
2	Seal face, product side
6, 7, 13, 14, 15	O-Ring
11	Seat, product side
12	Seat, atmosphere side

Standards and approvals

- Material approvals: FDA
- DIN 28136 (for glass-lined vessels)
- DIN 28137T2
- DIN 28159

Recommended seal supply

- Closed circuit EagleBurgmann TS system,
- Open circuit EagleBurgmann SPA, EagleBurgmann SPN

Notes

Options:
- Cooling or heating flange
- Leakage drain, flush or heating flange
- Leakage drain or flush
- Polymerization barrier, leakage drain or flush

See page 259.

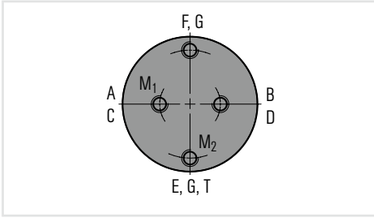

Supply connections

Designation and positions of screwed connections, pull-off and jacket threads acc. to DIN 28138 T3.

A	Barrier fluid resp. quench IN
B	Barrier fluid resp. quench OUT
C	Drainage
D	Leakage drain G1/8"
E	Cooling IN G3/8"
F	Cooling OUT G3/8"
G	Grease
T	Temperature metering

Recommended applications

- Chemical industry
- Pharmaceutical industry
- Non-toxic media with single seal
- Toxic media with double seal
- Agitators
- Reactors

Product variants

M461K-D
Double seal

M461KL-D
Double seal with integrated floating bearing.

M56K(L)-D
Double seal with/without floating bearing for PN25.

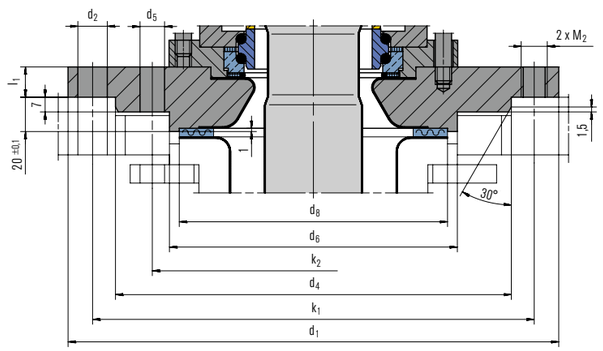

Flange connections acc. to DIN 28137 T2
for nominal diameters 125 ... 161.

Torque transmissions

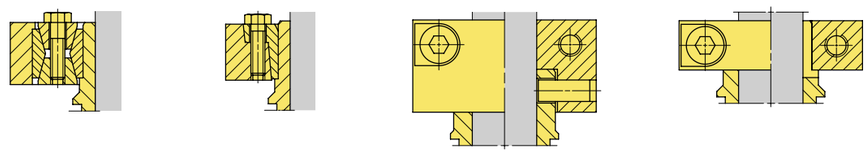

Clamping set | **Shrink disk** | **Clamping ring** | **Clamping ring with pin**

Dimensions in mm

d_3 1)	d_7 1)	Nominal size	Flange size 2)	d_1	nxd_2	d_4	nxd_5	d_6	d_8	k_1	k_2	L_1	L_2	l_1	l_2	l_3	l_4	l_5	M_1	M_2	A,B
40	38	40	E125	175	4 x 18	110	–	–	102	145	–	107	156	25	35	28	50	50	M12	M16	G3/8
50	48	50	E200	240	8 x 18	176	–	–	138	210	–	107	167	25	40	28	50	50	M12	M16	G3/8
60	58	60	E250	275	8 x 22	204	–	–	188	240	–	116	175	25	42	28	50	60	M12	M20	G3/8
80	78	80	E300	305	8 x 22	234	–	–	212	270	–	125	206	30	45	34	60	60	M16	M20	G1/2
100	98	100	E400	395	12 x 22	313	–	–	268	350	–	125	143	30	52	34	60	60	M16	M20	G1/2
100	98	100	E500	395	12 x 22	313	–	–	268	350	–	125	143	30	52	34	60	60	M16	M20	G1/2
125	120	125	E700	505	4 x 22	422	12x22	320	306	460	350	133	226	30	75	40	60	80	M20	M20	G1/2
140	135	140	E700	505	4 x 22	422	12x22	320	306	460	350	144	242	30	79	40	60	80	M20	M20	G1/2
160	150	160	E700	505	4 x 22	422	12x22	320	306	460	350	151	242	30	77	40	60	85	M20	M20	G1/2
160	150	160	E900	505	4 x 22	422	12x22	320	306	460	350	151	242	30	77	40	60	85	M20	M20	G1/2
160	150	161	E901	565	4 x 26	474	12x22	370	356	515	400	151	242	30	77	40	60	85	M20	M20	G1/2

1) Shaft diameters d_3 and d_7 to DIN 28159
2) Flange size to DIN 28137T2

MR-D

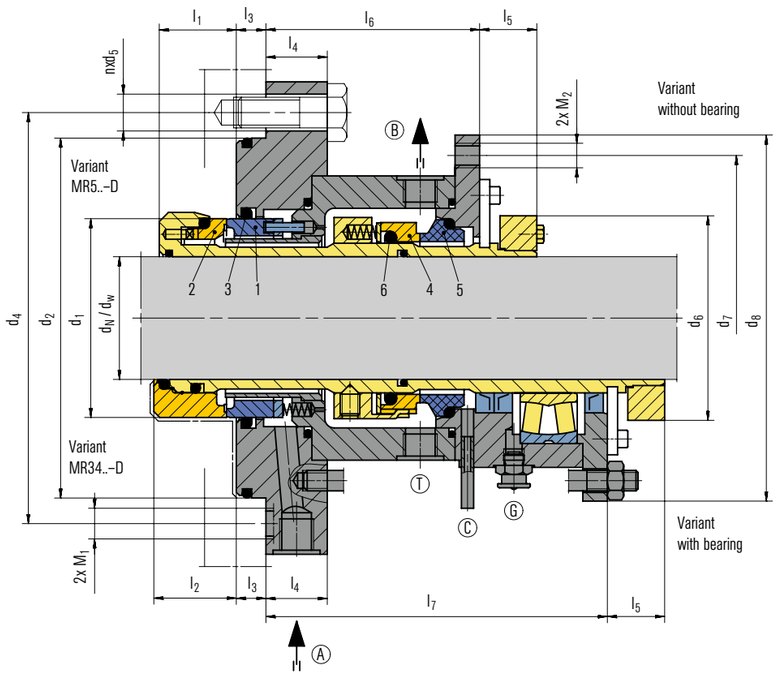

Features

- For top, lateral and bottom drives
- Product side seat rotating
- Unbalanced
- Double seal
- Independent of direction of rotation
- Cartridge unit

Advantages

- Smooth surface with no empty spaces
- CIP-/SIP (Cleaning in Place, Sterilization in Place)
- Sliding materials FDA conform
- Variant for sterile applications available

Operating range (see note on page 1)

Shaft diameter: d_N/d_w = 30 ... 200 (500) mm (1.18" ... 7.87" (19.68"))

Axial offset shaft/housing:
d_N/d_w 30 ... 60 mm (1.18" ... 2.36"): max. ±1.5 mm (0.059")
d_N/d_w >60 mm (2.36"): max. ±2.0 mm (0.079")
Radial offset shaft/housing: max. ±0.3 mm (0.012")

Pressure:
p_1 (media) = vacuum ... 14 (23) bar (203 (334 PSI))
p_3 (buffer fluid) = max. 16 (25) bar (232 (363 PSI))
$\Delta p_3 > p_1$ = min. 2 bar (29 PSI), max. 10 bar (145 PSI)

Temperature:
t_1 (media) = –20 °C ... +200 (300) °C (–4 °F ... +392 (572) °F)
Sliding velocity: v_g = 20 m/s (66 ft/s)
For applications beyond this range, please inquire.

Recommended seal supply

Closed circuit: EagleBurgmann TS system, EagleBurgmann DRU pressure booster
Sterile seals:
Closed circuit: EagleBurgmann TS system sterilizable.
Open circuit: EagleBurgmann SPA/SPN

Dimensions

Dimensions on request

Item	Description
1	Seal face, product side
2	Seat, product side
3	O-Ring, dynamic
4	Seal face, atmosphere side
5	Seat, atmosphere side
6	O-Ring, dynamic

Materials

Product side:
Seal face, seat: Silicon carbide (Q1), Tungsten carbide (U)
Metal parts: Cr steel (E), CrNiMo steel (G), Hastelloy® (M)

Atmosphere side:
Seal face, seat: Silicon carbide (Q1),
Carbon graphite resin impregnated (B)
Metal parts: Cr steel (E), CrNiMo steel (G)

Product and atmosphere side:
Springs: CrNiMo steel (G), Hastelloy® (M)
Secondary seals: EPDM (E), FKM (V), FFKM (K), FKM, FEP wrapped (M5)

Other materials on request.

Standards and approvals

- Material approvals: FDA

Notes

Options:
- Cooling or heating flange
- Temperature probe
- Axial expansion joint (shaft lifting)
- Wiper ring (shaft lifting)

Please inquire.

Recommended applications

- Chemical industry
- Pharmaceutical industry
- Food and beverage industry
- Reactors
- Mixers
- Kneaders
- Mills
- Dryers
- Pressure filters

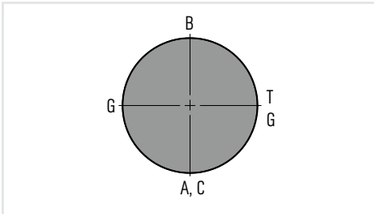

Supply connections

A	Barrier fluid IN
B	Barrier fluid OUT
C	Drainage
G	Grease
T	Temperature measuring

Torque transmissions

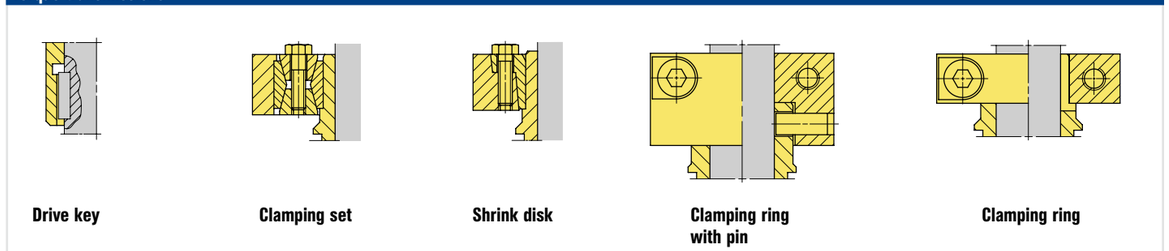

Special designs on request.

1 HS-D

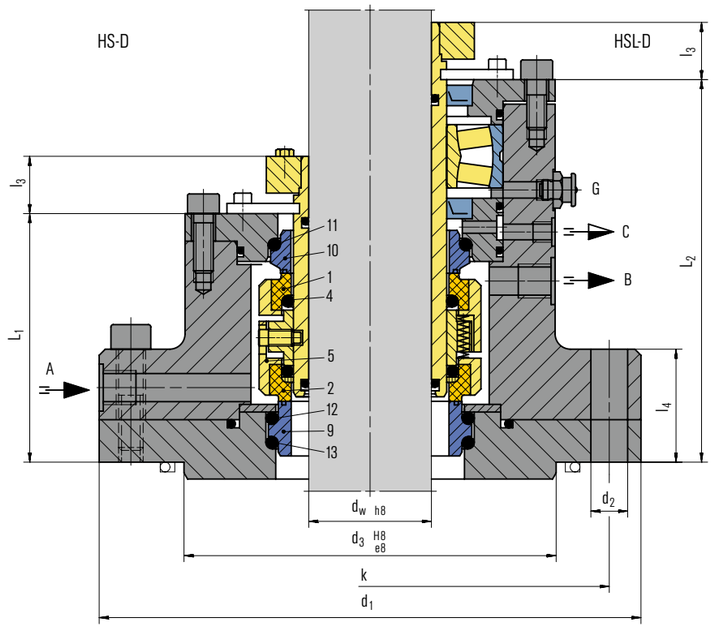

Features

- For top drive entries
- Multiple seals rotating
- Unbalanced
- Double seal
- Independent of direction of rotation
- Liquid-lubricated
- Cartridge unit

Advantages

- Patented hydrodynamic grooves
- High reliability and long service life
- Designed for medium pressure range
- Ready-to-fit and factory-tested units
- Connection dimensions to customer's requirements
- Due to the hydraulic product pressure as well overlaying barrier pressure closes the seal.

Operating range (see note on page 1)

Shaft diameter: d_w = 20 ... 500 mm (0.79" ... 19.69")
Pressure: p_1 = vacuum ... 30 bar (... 435 PSI)
Temperature: t = –40 °C ... +200 (350) °C
(–40 °F ... +392 (662) °F)
Sliding velocity: v_g = 0 ... 5 m/s (0 ... 16 ft/s)
For applications beyond this range, please inquire.

Standards and approvals

- Material approvals: FDA

Product variants

HS ... -D
Double seal, unbalanced.

HSL-D
Double seal, unbalanced, with integrated floating bearing.

Item	Description
1	Seal face, atmosphere side
2	Seal face, product side
4, 5, 11, 12, 13	O-Ring
9	Seat, product side
10	Seat, atmosphere side

Materials

According to application and customer's specification

Recommended seal supply

Open barrier fluid circuit
e. g. EagleBurgmann SPA, EagleBurgmann SPN

Recommended applications

- Chemical industry
- Pharmaceutical industry
- Suitable for all media

Top entry drives:
- Agitators
- Dryers
- Mixers
- Filter
- Special rotating equipment

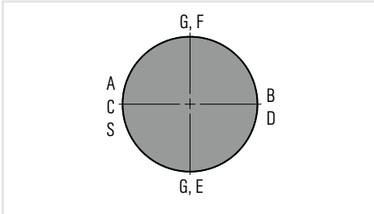

Supply connections

A	Barrier fluid IN
B	Barrier fluid OUT
C	Drainage
D	Leakage drain G1/8"
E	Cooling IN G3/8"
F	Cooling OUT G3/8"
G	Grease
S	Flush

Notes

Options:
- Cooling or heating flange
- Leakage drain, flush or heating flange
- Leakage drain or flush
- Polymerization barrier, leakage drain or flush

See page 259.

Dimensions in mm

d_w	d_1	n x d_2	d_3	k	L_1	L_2	l_3	l_4
40	200	6 x 18	80	170	115	170	35	45
50	230	8 x 18	100	200	120	185	35	55
60	255	8 x 18	120	225	140	210	35	60
80	295	8 x 23	145	260	145	230	44	60
100	315	8 x 23	170	280	160	245	44	65
120	345	8 x 23	190	310	160	250	50	65
140	380	12 x 23	215	345	165	265	50	65
160	440	12 x 27	240	395	185	300	50	75
180	475	12 x 27	260	430	185	310	55	75
200	465	12 x 27	290	420	190	290	55	75

HSH-D

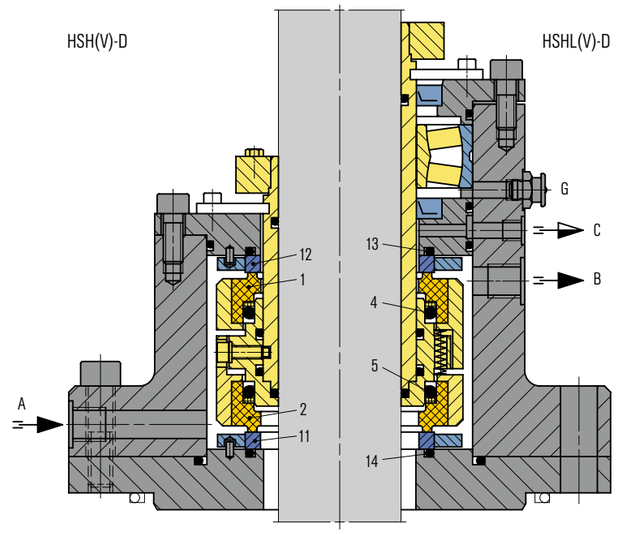

Features

- For top drive entries
- Multiple springs rotating
- Balanced
- Double seal
- Independent of direction of rotation
- Liquid-lubricated
- Cartridge unit
- on request with integrated bearing

Advantages

- Patented hydrodynamic grooves
- High reliability and long service life
- Designed for medium and high pressure range
- Ready-to-fit and factory-tested units
- Connection dimensions to customer's requirements
- Due to the hydraulic product pressure as well overlaying barrier pressure closes the seal.

Operating range (see note on page 1)

Shaft diameter: d_w = 20 ... 400 mm (0.79" ... 15.75")
Pressure: p_1 = vacuum ... 250 bar (... 3,625 PSI)*,
$p_3 = p_1$ + 10 %
Temperature: t = –40 °C ... +200 (350) °C
(–40 °F ... +392 (662) °F)
Sliding velocity: v_g = 0 ... 5 m/s (0 ... 16 ft/s)
* Depending on size, from 100 ... 150 bar (1,450 ... 2,175 PSI) executed as tandem seal (pressure reduction in 2 stages).

Item	Description
1	Seal face, atmosphere side
2	Seal face, product side
4, 5, 13, 14	O-Ring
11	Seat, product side
12	Seat, atmosphere side

Materials

According to application and customer's specification

Recommended seal supply

Open barrier fluid circuit
e. g. EagleBurgmann SPA, EagleBurgmann SPN

Recommended applications

- Chemical industry
- Pharmaceutical industry
- Suitable for all media
- Agitators
- Dryers
- Mixers
- Filter
- Special rotating equipment

Product variants

HSH(V)-D
Double seal

HSH(V)L-D
Double seal with integrated floating bearing (axial thrust bearing on request).

Dimensions

Dimensions on request

Notes

Options:
- Cooling or heating flange
- Leakage drain, flush or heating flange
- Leakage drain or flush
- Polymerization barrier, leakage drain or flush

See page 259.

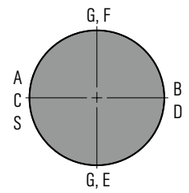

Supply connections

A	Barrier fluid IN
B	Barrier fluid OUT
C	Drainage
D	Leakage drain G1/8"
E	Cooling IN G3/8"
F	Cooling OUT G3/8"
G	Grease
S	Flush

Torque transmissions (HS-D, HSH-D)

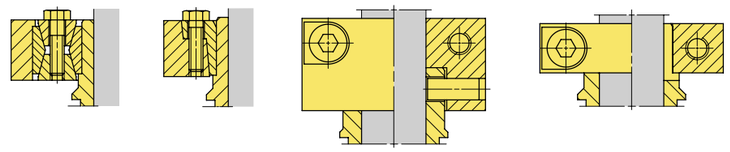

Clamping set **Shrink disk** **Clamping ring with pin** **Clamping ring**

1 HSHLU-D

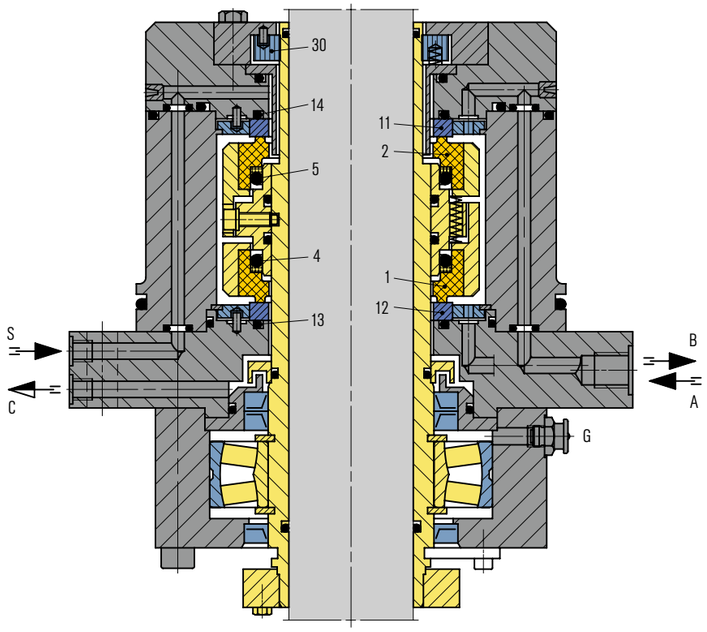

Features

- For bottom drive entries
- Multiple springs rotating
- Balanced
- Double seal
- Independent of direction of rotation
- Liquid-lubricated
- Cartridge unit
- On request with integrated bearing

Advantages

- High pressure seal for process orientated solutions
- Patented hydrodynamic grooves
- Floating throttle ring on the product side
- High reliability and long service life
- Ready-to-fit and factory-tested units
- Connection dimensions to customer's requirements
- Due to the hydraulic conditions, product pressure as well overlaying barrier pressure closes the seal

Operating range (see note on page 1)

Shaft diameter: d_w = ... 400 mm (... 15.75")
Pressure: p_1 = vacuum ... 60 bar (870 PSI)
Temperature: t = –40 °C ... +200 °C (–40 °F ... +392 °F)
Sliding velocity: v_g = 0 ... 5 m/s (0 ... 16 ft/s)
For applications beyond this range, please inquire.

Item	Description
1	Seal face, atmosphere side
2	Seal face, product side
4, 5, 13, 14	O-Ring
11	Seat, product side
12	Seat, atmosphere side
30	Throttle ring

Materials

According to application and customer's specification

Recommended seal supply

Open barrier fluid circuit
e. g. EagleBurgmann SPA, EagleBurgmann SPN

Recommended applications

- Chemical industry
- Suitable for all media
- Agitators

Dimensions

Dimensions on request

Notes

Options:
- Cooling or heating flange
- Leakage drain, flush or heating flange
- Leakage drain or flush

See page 259. Please inquire.

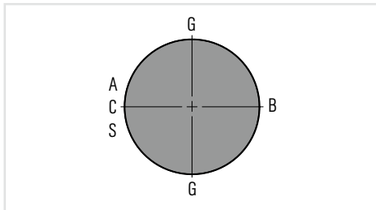

Supply connections

A	Barrier fluid IN
B	Barrier fluid OUT
C	Drainage
G	Grease
S	Flush

STD1

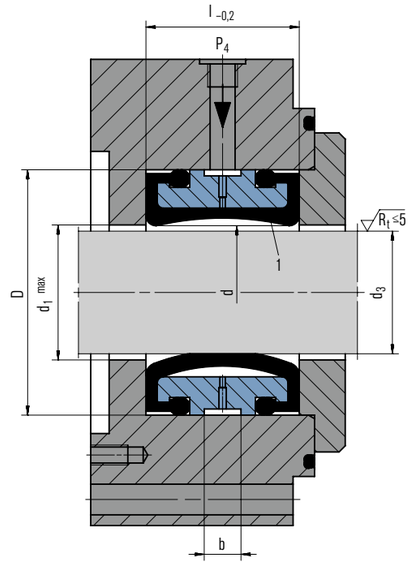

Advantages

If a STD is employed, it is possible to change seals with the vessel loaded and under pressure (shaft must be stationary!). Can be installed in each position. Installation dimensions according to DIN 28138 Part 1 are possible. Material properties have to be taken into account.

Operating range (see note on page 1)

Shaft diameter: d_w = 40 ... 200 mm (1.57" ... 7.87")
Pressure: p_1 = 16 bar (232 PSI)
Temperature: t = 100 °C (212 °F)

Elastomer sealing element (Item no. 1) with pneumatic or hydraulic actuation (closing pressure $p_4 > p_1$).

Recommended applications

- Chemical industry
- Pharmaceutical industry
- Agitators

Note

This seal can only be used if the product does not harden or congeal during the shut down period or for sterile operation (fermenting vessels). Not available in PTFE.

Dimensions in mm

d_3	D	d	d_1	l	b
40	76	42.5	42	38.0	8
50	84	52.5	52	38.0	8
60	95	62.5	62	44.5	10
80	118	82.5	82	45.0	10
100	138	102.5	102	45.0	10
125	160	127.5	127	45.0	10
140	180	143.5	143	50.0	12
160	200	163.5	163	50.0	12
180	215	183.5	183	50.0	12
200	240	203.5	203	50.0	12

DGS

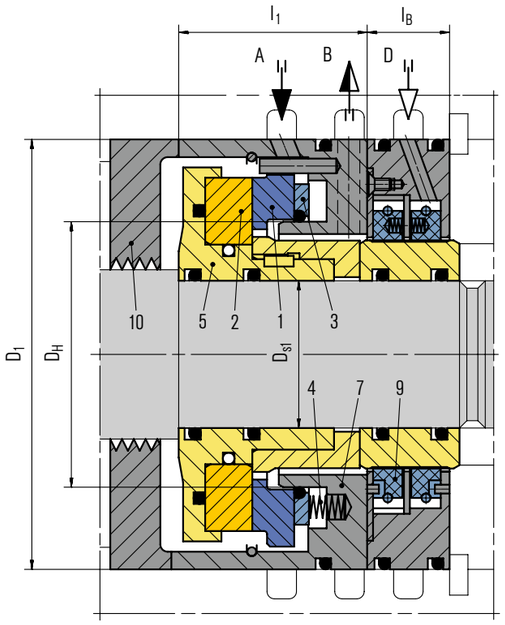

Features

- Gas-lubricated
- Unidirectional or bidirectional available
- Ready-to-fit cartridge unit
- Single, dual, tandem and tandem with intermediate labyrinth available

Advantages

The proven Dry Gas Seal for pressures up to 100 bar (1,450 PSI). Due to simple components a reliable and economical solution for low pressure applications.

Application single seal: The simplest seal is a Dry Gas Seal in single arrangement. This seal is used in case that due to the nature of the product gas no additional back up seal is required. Separation seals as labyrinths, radial clearance seals or CobaSeal™ are optionally available. This version is used as an emission-free arrangement with a corresponding flare/vent connection. Primary leakage is then discharged with the separating gas to the flare/vent. In the case of dirty gases the gas to be sealed has to be filtered in addition and conveyed to the seal chamber via connection "A". The resulting gas flow from the sealing compartment prevents any dirty/wet gas gas entering the seal.

Operating range (see note on page 1)

Shaft diameter: D_{s1} = 29 ... 264 mm (1.14" ... 10.39")
Pressure: p = 0 ... 100 bar (1,450 PSI)
Temperature: t = –20 °C ... +200 °C (–4 °F ... +392 °F)
Sliding velocitiy: v_g = 0.6 ... 200 m/s (2 ... 656 ft/s)

Item	Description
1	Seal face, stationary
2	Seat, rotating
3	Thrust ring
4	Spring
5	Shaft sleeve and seat retainer
6	Intermediate sleeve
7, 8	Housing (adapted in size to the installation space)
9	Carbon ring type separation seal
10	Labyrinth
11	Intermediate labyrinth
A	Product flushing
B	Flare
C	Buffer gas
D	Separating gas
S	Vent

Materials

Seal face: Silicon carbide (Q1) with DLC coating
Seat: Silicon carbide (Q1) with DLC coating
Secondary seals: FKM (V) or other materials depending on product gas composition
Metal parts: 1.4006 or other stainless steels.

Standards and approvals

- NACE

Recommended applications

- Oil and gas industry
- Refining technology
- Petrochemical industry
- Hydrocarbon gas
- Ammonia
- Nitrogen
- Air
- Centrifugal compressors
- Turbo expanders
- Blowers

Product variants

DGS Tandem seal

Application: Where small product leakages of process gas are admissible, e. g. on gas pipeline compressors. Seal on the atmosphere side acting as a safety seal. The tandem arrangement provides a particularly high degree of operational safety. The seal on the product side and the seal on the atmosphere side are able to absorb the complete pressure differential. Under normal operating conditions the full pressure is reduced only by the seal on the product side. The space between the seal on the product side and the seal on the atmosphere side is cleared by a connection "B" to the primary vent (flare). The pressure differential to be sealed by the seal on the atmosphere side equals the primary vent pressure, so the leakage to the secondary vent (atmosphere) is very low. If the main seal fails, the second seal acts as a safety seal.

DGS Tandem seal with intermediate labyrinth

Application: Where product leakages to the atmosphere as well as buffer gas leakages to the product are inadmissible, e. g. on H_2, ethylene or propylene compressors. With this version the product pressure to be sealed is reduced via the seal on the product side. The entire process gas leakage is discharged via connection "B" to the primary vent. The seal on the atmosphere side is pressurized with buffer gas (nitrogen) via connection "C". The pressure of the buffer gas ensures that a nitrogen flows via the labyrinth to the flare/vent outlet.

DGS Dual seal

Application: Where product leakages to the atmosphere are inadmissible and tandem arrangements are not suitable because of too small product gas pressures. Buffer gas leakages into the product must be admissible (buffer pressure $p_3 > p_1$). This seal is used when a neutral buffer gas of suitable pressure is available. Typical applications are to be found mainly in the chemical industry, e. g. on HC gas compressors. A buffer gas, e. g. nitrogen, is fed between the seals via connection "C" at a higher pressure than the product pressure. One part of the buffer gas leakage escapes to the atmosphere side and the other part to the product.

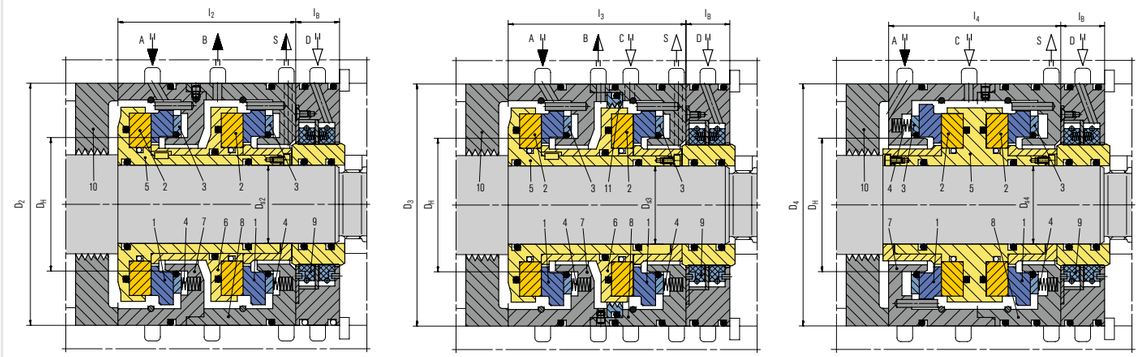

Dimensions in mm

D_N	D_H	D_{s1}	D_1	l_1	D_{s2}	D_2	l_2	D_{s3}	D_3	l_3	D_{s4}	D_4	l_4	l_B
40	52.8	29	93	40	25	93	78	25	107	78	29	97	73	46
46	59.5	35	99	40	31	99	78	31	114	78	35	103	73	46
49	61.7	38	102	40	34	102	78	34	117	78	38	106	73	46
56	69.9	45	111	40	41	111	78	41	126	78	45	115	73	46
63	76.8	52	118	40	47	118	78	47	133	78	52	122	73	47
68	83.9	57	129	40	52	129	90	52	144.5	90	57	133	73	47
73	88.8	63	134	48	58	134	95	58	149.5	95	63	138	89	48
78	93.8	68	139	48	63	139	96	63	154.5	96	68	143	89	48
83	98.7	73	144	48	68	144	96	68	159.5	96	73	148	89	48
88	103.7	78	149	51	73	149	104.5	73	164.5	104.5	78	153	95.5	48.5
93	108.7	83	155	51	78	155	104.5	78	170.5	104.5	83	159	95.5	48.5
98	113.7	88	161	51	83	161	103.5	83	175.5	103.5	88	165	95.5	46.5
103	118.6	93	165	51	88	165	102.5	88	180.5	102.5	93	169	95.5	46.5
108	123.6	98	170	51	93	170	102.5	93	185.5	102.5	98	174	95.5	46.5
113	128.6	103	175	51	98	175	103.5	98	191	103.5	103	179	95.5	46.5
118	133.6	108	180	51	103	180	102.5	103	196	102.5	108	184	95.5	48
123	138.6	113	185	52.5	108	185	104.5	108	201	104.5	113	189	99	47.5
130	150.5	120	197	52.5	114	197	106.5	114	213	106.5	120	201	99	47.5
135	155.5	125	202	55.5	119	202	110.5	119	218	110.5	125	206	99	47.5
140	160.5	130	207	55.5	124	207	110.5	124	223	110.5	130	211	99	47
145	165.5	135	212	55.5	129	212	109.5	129	228	109.5	135	216	99	47.5
150	171.4	139	223	55.5	133.5	223	115	133.5	241.5	115	139	227	99	48.5
155	176.4	144	228	55.5	138.5	228	116	138.5	247.5	116	144	232	99	48
160	181.4	148	233	59.5	143.5	233	120	143.5	252.5	120	148	237	109	48.5
165	186.4	153	238	59.5	148.5	238	119	148.5	257.5	119	153	242	109	49
170	191.4	158	243	59.5	153.5	243	119	153.5	261	119	158	247	109	49
180	201.4	168	253	59.5	163.5	253	122	163.5	271	122	168	257	109	54
190	211.4	178	263	64	173.5	263	128.5	173.5	281	128.5	178	267	118	56.5
200	221.3	187	273	64	183.5	273	128.5	183.5	291	128.5	187	277	118	56.5
210	231.3	197	283	67	193.5	283	134.5	193.5	301	134.5	197	287	120	59.5
220	241.3	207	293	72	203.5	293	142.5	203.5	309	142.5	207	297	129	61
230	251.3	217	303	72	213.5	303	143.5	213.5	320	143.5	217	307	129	63
240	261.3	224	313	72	222.5	313	143.5	222.5	330.5	143.5	224	317	129	62
250	271.3	234	323	77	232.5	323	156	232.5	340.5	156	234	335	138	63.5
260	282.2	244	339	82	242.5	339	161	242.5	355	161	244	351	145	65.5
270	292.2	254	349	82	252.5	349	162	252.5	364	162	254	361	145	68.5
280	302.2	264	359	87	262.5	359	175.5	262.5	376	175.5	264	371	154	67.5

PDGS

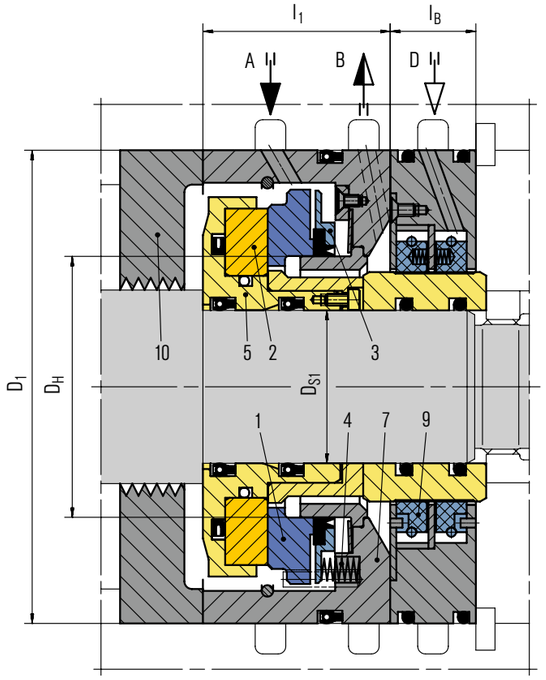

Features

- Gas-lubricated
- Uni-directional or bi-directional
- Elastomer-free
- Ready-to-fit cartridge unit
- Single, double, tandem seal and tandem with intermediate labyrinth available

Advantages

High quality components make this a universal seal for a wide range of applications and the ideal solution for standardization. The universal gas seal for centrifugal compressors; resistant to chemicals.

Application single seal: The simplest seal is a Dry Gas Seal in single arrangement. This seal is used in case that due to the nature of the product gas no additional back up seal is required. Separation seals as labyrinths, radial clearance seals or CobaSeal™ are optionally available. This version is used as an emission-free arrangement with a corresponding flare/vent connection. Primary leakage is then discharged with the separating gas to the primary vent (flare). In the case of dirty gases the gas to be sealed has to be filtered in addition and conveyed to the seal chamber via connection "A". The resulting gas flow from the sealing compartment prevents any dirty/wet gas gas entering the seal.

Operating range (see note on page 1)

Shaft diameter: D_{s1} = 29 ... 435 mm (1.14" ... 17.13")
Pressure: p = 0 ... 450 bar (0 ... 6,525 PSI)
Temperature: t = –170 °C ... +230 °C
(–274 °F ... +446 °F)
Sliding velocity: v_g = 0.6 ... 200 m/s (2 ... 656 ft/s)

Materials

Seal face: Silicon carbide (Q1) with DLC coating
Seat: Silicon carbide (Q1) with DLC coating
Secondary seals: Polymer rings
Metal parts: 1.4006 and other stainless steels.

Standards and approvals

- NACE

Item	Description
1	Seal face, stationary
2	Seat, rotating
3	Thrust ring
4	Spring
5	Shaft sleeve and seat retainer
6	Intermediate sleeve
7, 8	Housing (adapted in size to the installation space)
9	Carbon ring type separation seal
10	Labyrinth
11	Intermediate labyrinth
A	Product flushing
B	Flare
C	Buffer gas
D	Separating gas
S	Vent

Note

- Available with EagleBurgmann DiamondFaces®

Recommended applications

- Oil and gas industry
- Refining technology
- Petrochemical industry
- Hydrocarbon gas
- Ammonia
- Nitrogen
- Refrigerants
- Air
- Centrifugal compressors
- Turbo expanders
- Blowers

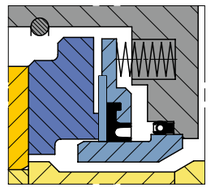

Main components of the dynamic secondary seal of the PDGS are made of the extremely rigid material tungsten carbide which allows an optimum control of the extrusion clearance over the full range of operation. The specific design of the polymer cup seals ensures minimum sliding forces combined with wear-free operation.

Product variants

PDGS Tandem seal
Application: Where small product leakages of process gas are admissible, e. g. on gas pipeline compressors. Seal on the atmosphere side acting as a safety seal. The tandem arrangement provides a particularly high degree of operational safety. The seal on the product side and the seal on the atmosphere side are able to absorb the complete pressure differential. Under normal operating conditions the full pressure is reduced only by the seal on the product side. The space between the seal on the product side and the seal on the atmosphere side is cleared by a connection "B" to the flare. The pressure differential to be sealed by the seal on the atmosphere side equals the flare pressure, so the leakage to the atmosphere side or to the vent is very low. If the main seal fails, the second seal acts as a safety seal.

PDGS Tandem seal with intermediate labyrinth
Application: Where product leakages to the atmosphere as well as buffer gas leakages to the product are inadmissible, e. g. on H_2, ethylene or propylene compressors. With this version the product pressure to be sealed is reduced via the seal on the product side. The entire process gas leakage is discharged via connection "B" to the flare. The seal on the atmosphere side is pressurized with buffer gas (nitrogen) via connection "C". The pressure of the buffer gas ensures that a current flows via the labyrinth to the primary vent outlet.

PDGS Dual seal
Application: Where product leakages to the atmosphere are inadmissible and tandem arrangements are not suitable because of too small product gas pressures. Buffer gas leakages into the product must be admissible (buffer pressure $p_3 > p_1$). This seal is used when a neutral buffer gas of suitable pressure is available. Typical applications are to be found mainly in the chemical industry, e. g. on HC gas compressors. A buffer gas, e. g. nitrogen, is fed between the seals via connection "C" at a higher pressure than the product pressure. One part of the buffer gas leakage escapes to the atmosphere side and the other part to the product.

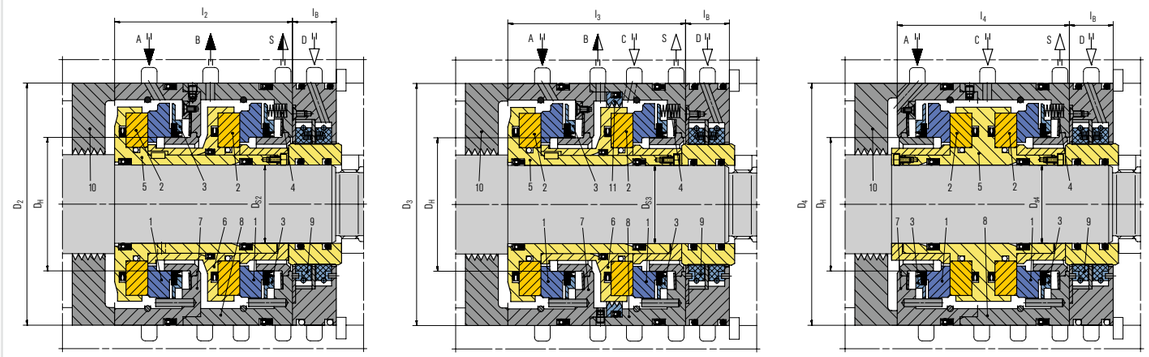

Dimensions in mm

D_N	D_H	D_{s1}	D_1	l_1	D_{s2}	D_2	l_2	D_{s3}	D_3	l_3	D_{s4}	D_4	l_4	l_B
40	52.8	29	92	40	25	92	93	25	107	93	29	96	73	46
46	59.5	35	99	40	31	99	93	31	114	93	35	103	73	46
49	61.7	38	102	40	34	102	93	34	117	93	38	106	73	46
56	69.9	45	111	40	41	111	93	41	126	93	45	115	73	46
63	76.8	52	118	40	47	118	93	47	133	93	52	122	73	48
68	83.9	57	129	48	52	129	97	52	144.5	97	57	133	91.5	50
73	88.8	63	134	51	58	134	104	58	149.5	104	63	138	97.5	48
78	93.8	68	139	51	63	139	104	63	154.5	104	68	143	97.5	48
83	98.7	73	144	51	68	144	104	68	159.5	104	73	148	97.5	50.5
88	103.7	78	149	54.5	73	149	111.5	73	164.5	111.5	78	153	104.5	48.5
93	108.7	83	155	54.5	78	155	111.5	78	170.5	111.5	83	159	104.5	48.5
98	113.7	88	161	54.5	83	161	111.5	83	175.5	111.5	88	165	104.5	46.5
103	118.6	93	165	54.5	88	165	111.5	88	180.5	111.5	93	169	104.5	46.5
108	123.6	98	170	54.5	93	170	111.5	93	185.5	111.5	98	174	104.5	46.5
113	128.6	103	175	54.5	98	175	111.5	98	191	111.5	103	179	104.5	46.5
118	133.6	108	180	54.5	103	180	111.5	103	196	111.5	108	184	104.5	46.5
123	138.6	113	185	55.5	108	185	113.5	108	201	113.5	113	189	106.5	47.5
130	150.5	120	197	55.5	114	197	113.5	114	213	113.5	120	201	106.5	47.5
135	155.5	125	202	58.5	119	202	118.5	119	218	118.5	125	206	111.5	47.5
140	160.5	130	207	58.5	124	207	118.5	124	223	118.5	130	211	111.5	47.5
145	165.5	135	212	58.5	129	212	118.5	129	228	118.5	135	216	111.5	47.5
150	171.4	139.5	223	61	133.5	223	124	133.5	241.5	124	139.5	227	116.5	48
155	176.4	144.5	228	61	138.5	228	124	138.5	247.5	124	144.5	232	116.5	48
160	181.4	148.5	233	63	143.5	233	128	143.5	252.5	128	148.5	237	120.5	49
165	186.4	153.5	238	63	148.5	238	128	148.5	257.5	128	153.5	242	120.5	49
170	191.4	158.5	243	63	153.5	243	128	153.5	261	128	158.5	247	120.5	49
180	201.4	168.5	253	65	163.5	253	132	163.5	271	132	168.5	257	124.5	54
190	211.4	178.5	263	67.5	173.5	263	137.5	173.5	281	137.5	178.5	267	129.5	56.5
200	221.3	187.5	273	67.5	183.5	273	137.5	183.5	291	137.5	187.5	277	129.5	55.5
210	231.3	197.5	283	70.5	193.5	283	142.5	193.5	301	142.5	197.5	287	134.5	59.5
220	241.3	207.5	293	75.5	203.5	293	152.5	203.5	309	152.5	207.5	297	144	61
230	251.3	217.5	303	75.5	213.5	303	152.5	213.5	320	152.5	217.5	307	144	63
240	261.3	227.5	313	75.5	222.5	313	152.5	222.5	330.5	152.5	227.5	317	144	62
250	271.3	237.5	323	81	232.5	323	163	232.5	340.5	163	237.5	335	154	63.5
260	282.2	247.5	339	84	242.5	339	169	242.5	350	169	247.5	351	160	65.5
270	292.2	257.5	349	84	252.5	349	169	252.5	364	169	257.5	361	160	67.5
280	302.2	267.5	359	89.5	262.5	359	180.5	262.5	376	180.5	267.5	371	170.5	67.5
290	314	277.5	379	89.5	272.5	379	180.5	272.5	386	180.5	277.5	391	170.5	66.5
300	324	287.5	384	90.5	282.5	384	180.5	282.5	396	180.5	287.5	393	172.5	67.5
310	336	295	395	91.5	290	395	180.5	292	411	180.5	295	404	175	67.5
320	346	305.5	406	93.5	299.5	406	185	302	422	185	305.5	417	176.5	68
330	356	315	417	95.5	310	417	190	312	433	190	315	427	183	69
350	375.8	335.5	440	102	329.5	440	195	332	455	195	335.5	450	195.5	71
390	415.8	375.5	484	108	369.5	484	210	371	499	210	375.5	495	207.5	74
450	480	435	551	118	430	551	230	431	566	230	435	564	227	80

MDGS

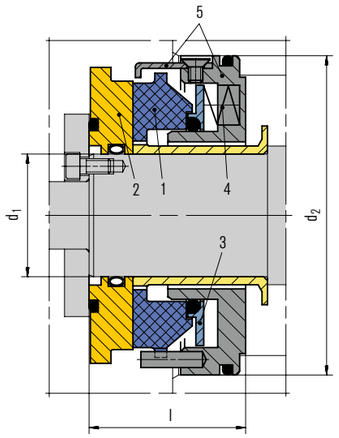

Features

- Gas-lubricated
- Bi-directional
- Ready-to-fit cartridge unit
- Single, double, tandem seal and tandem with intermediate labyrinth available

Operating range (see note on page 1)

Shaft diameter: d_1 = 40 ... 280 mm (1.57" ... 8.66")
Pressure: p = 0 ... 50 bar (0 ... 725 PSI)
Temperature: t = –20 °C ... 200 °C (–4 °F ... +392 °F)
Sliding velocity: v_g = 0.6 ... 200 m/s (2 ... 656 ft/s)

Advantages

The rotating ductile ring with a high performance coating as the main distinctive feature to other dry gas seals excludes any ring disintegration in case of seal failure. The required radial space of this seal is smaller than existing Dry Gas Seals and the seal fits into small seal cavities, as you find them in process gas screw compressors, without making any compromise with regard to seal reliability. The stationary spring loaded unit is supplied as a sub cartridge in combination with a rotating ductile seat integrating secondary functions such as centring and secondary sealing by means of an O-Ring allow the use of this seal as a component seal.

Item	Description
1	Seal face, stationary
2	Seat, rotating
3	Thrust ring
4	Spring
5	Housing of standardized stationary sub-cartridge
6	Shaft sleeve, intermediate sleeve
7, 8	Housing (adapted in size to the installation space)
9	Carbon ring type separation seal
10	Intermediate labyrinth
A	Product flushing
B	Flare
C	Buffer gas
D	Separating gas
S	Vent

Materials

Seal face: Carbon graphite impregnated
Seat: Ductile stainless steel with DM-TiN coating
Secondary seals: FKM (V) or other materials depending on product gas composition
Metal parts: 1.4006 or other stainless steels.

Standards and approvals

- NACE

Recommended applications

- Oil and gas industry
- Refining technology
- Petrochemical industry
- Hydrocarbon gas
- Ammonia
- Nitrogen
- Refrigerants
- Air
- Centrifugal compressors
- Dry process gas screw compressors
- Blowers

Product variants

MDGS Tandem seal

Application: Where small product leakages of process gas are admissible, e. g. on gas pipeline compressors. Seal on the atmosphere side acting as a safety seal. The tandem arrangement provides a particularly high degree of operational safety. The seal on the product side and the seal on the atmosphere side are able to absorb the complete pressure differential. Under normal operating conditions the full pressure is reduced only by the seal on the product side. The space between the seal on the product side and the seal on the atmosphere side is cleared by a connection "B" to the primary vent (flare). The pressure differential to be sealed by the seal on the atmosphere side equals the primary vent pressure, so the leakage to the secondary vent (atmosphere) is very low. If the main seal fails, the second seal acts as a safety seal.

MDGS Tandem seal with intermediate labyrinth

Application: Where product leakages to the atmosphere as well as buffer gas leakages to the product are inadmissible, e. g. on H_2, ethylene or propylene compressors. With this version the product pressure to be sealed is reduced via the seal on the product side. The entire process gas leakage is discharged via connection "B" to the primary vent. The seal on the atmosphere side is pressurized with buffer gas (nitrogen) via connection "C". The pressure of the buffer gas ensures that a nitrogen flows via the labyrinth to the flare/vent outlet.

MDGS Dual seal

Application: Where product leakages to the atmosphere are inadmissible and tandem arrangements are not suitable because of too small product gas pressures. Buffer gas leakages into the product must be admissible (buffer pressure $p_3 > p_1$). This seal is used when a neutral buffer gas of suitable pressure is available. Typical applications are to be found mainly in the chemical industry, e. g. on HC gas compressors. A buffer gas, e. g. nitrogen, is fed between the seals via connection "C" at a higher pressure than the product pressure. One part of the buffer gas leakage escapes to the atmosphere side and the other part to the product.

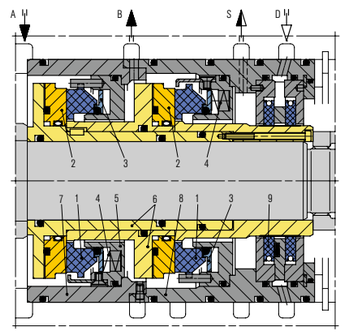

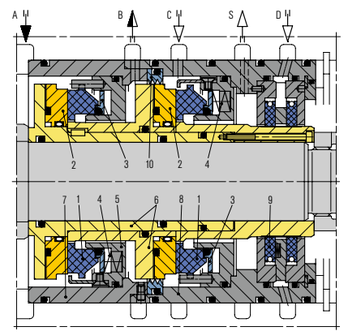

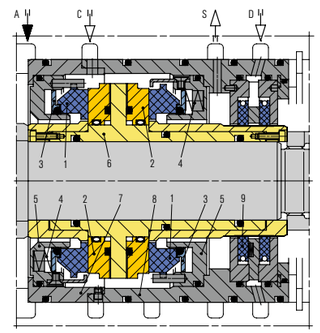

Dimensions in mm

D_N	d_1	d_2	l
40	40	80	34
45	45	86	34
50	50	92	34
55	55	97	34
60	60	100.5	34
65	65	106.5	34
70	70	112.5	34
75	75	122	39
80	80	127	39
85	85	133	39
90	90	138	39
95	95	144	39
100	100	149	40.5
105	105	154	40.5
110	110	159	40.5
115	115	164	40.5
120	120	170	42.5
125	125	175	42.5
130	130	180	42.5
135	135	186	42.5
140	140	195	42.5
145	145	201	42.5
150	150	208	46.5
160	160	218	46.5
170	170	229	46.5
180	180	241	46.5
190	190	250	50
200	200	261	50
210	210	271	50
220	220	282	50
230	230	296	55
240	240	307	55
250	250	318	55
260	260	330	55
270	270	341	55
280	280	352	60

TDGS

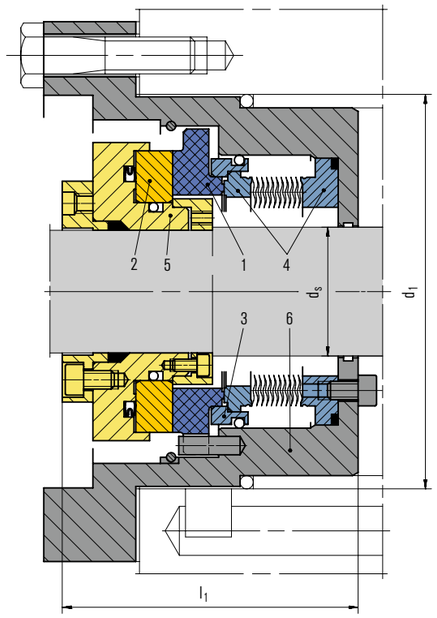

Features

- Gas-lubricated
- Uni-directional or bi-directional
- Elastomer-free
- Ready-to-fit cartridge unit
- Single seal available

Advantages

The gas seal for single stage steam turbines. The amount of steam leakage with the TDGS is only a fraction of that occurring with carbon ring seals, leading both to energy savings and an increase in the operating efficiency of the turbine. Bearing oil is no longer contaminated with condensed steam, which increases the service life of the bearings and results in a corresponding drop in maintenance costs.

Operating range (see note on page 1)

Shaft diameter: d_s = 40 ... 140 mm (1.57" ... 5.51")
Pressure: p = 0 ... 10 bar (0 ... 145 PSI)
Temperature: t = –50 °C ... +450 °C
(–58 °F ... +842 °F)
Sliding velocity: v_g = 130 m/s (427 ft/s)

Materials

Seal face: Carbon graphite antimony impregnated (A)
Seat: Silicon carbide (Q1)

Standards and approvals

- NACE

Item	Description
1	Seal face, stationary
2	Seat, rotating
3	Sleeve
4	Metal bellows unit
5	Shaft sleeve and seat retainer
6	Housing (adapted in size to the stallation space)

Recommended applications

- Refining technology
- Petrochemical industry
- Power plant technology
- Single stage steam turbines

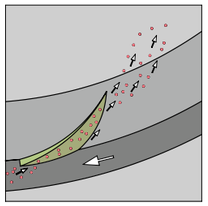

One outstanding feature of the EagleBurgmann gas groove is its inclined bottom (picture: V-groove, unidirectional). The lack of sharp baffle edges at the groove outlet allows dirt particles to be pulled through the sealing gap, reliably avoiding any build-up of dirt and guaranteeing safe operation. If deposits do build up in the sealing gap while the turbine is idle, they are expelled once the machine is restarted.

Dimensions

d_s mm	inch	d_1	l_1
40		100	75
50		110	75
57.15	2.25	125	75
60		125	75
63.5	2.50	125	75
69.85	2.75	135	80
70		135	80
76.2	3.00	145	85
80		145	85
82.55	3.25	145	85
88.9	2.50	155	90
90		155	90
95.25	3.75	165	95
100		165	95
101.6	4.00	165	95
120		190	105
140		210	110

NF941

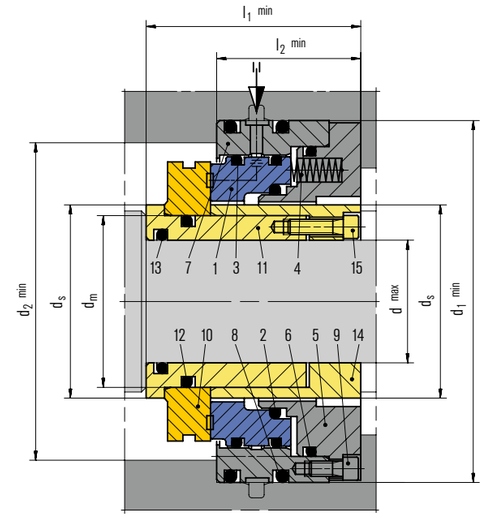

Features

- Single seal with double seal function
- Non-contacting from static to high speed condition
- Balanced
- Independent of direction of rotation
- Stationary multiple springs

Operating range (see note on page 1)

Pressure: p = 5 bar (73 PSI)
Temperature: t = –20 °C ... +200 °C (–4 °F ... +392 °F)
Sliding velocity: v_g = 60 m/s (197 ft/s)

Materials

Seal face: High density carbon graphite
Seat: Ductile stainless steel with TiN-coating or Silicon carbide (Q1)
Secondary seals: FKM (V)
Metal parts: 1.4401 (G)

Item	Description
1	Seal face
2	O-Ring
3	O-Ring
4	Spring
5	Adapter
6	O-Ring
7	Housing
8	O-Ring
9	HSH cap screw
10	Seat
11	Shaft sleeve
12	O-Ring
13	O-Ring
14	Clamp sleeve
15	HSH cap screw

Recommended applications

- Process industry
- Single wafer cleaning systems
- Dry screw compressors
- Blowers
- Agitators

Dimensions in mm

$d_{max.}$	d_m	d_s	$d_{1\ min.}$	$d_{2\ min.}$	$l_{1\ min.}$	$l_{2\ min.}$
35	46	53	101	91.5	59	43
40	51	58	106	96.5	59	43
45	56	63	112	101.5	60	44
50	61	68	117	104	60	44
55	66	73	122	110	60	44
60	71	78	127	115	63	44
65	76	83	132	120	63	44
70	81	90	139	129	63	44
75	86	95	145	134.5	63	44
80	91	100	150	140	63	44
86	100	109	162	149.5	68	45
93	107	117	172.5	160	68	45
98	112	122	178	165.5	68	45
103	117	127	184	171.5	68	45
108	122	132	188	175	68	45
113	127	137	193	180	68	45
120	134	144	200	187.5	68	45
127	141	151	207	194	68	45
133	147	157	214	200.5	68	45
137	151.5	163.5	228	211.5	74	48
143	157.5	169.5	234	217.5	74	48
156	170.5	182.5	248	231.5	74	48
169	183.5	195.5	261	244.5	74	48
181	195.5	207.5	274	257.5	74	48
200	214.5	226.5	293	275.5	74	48

NF953

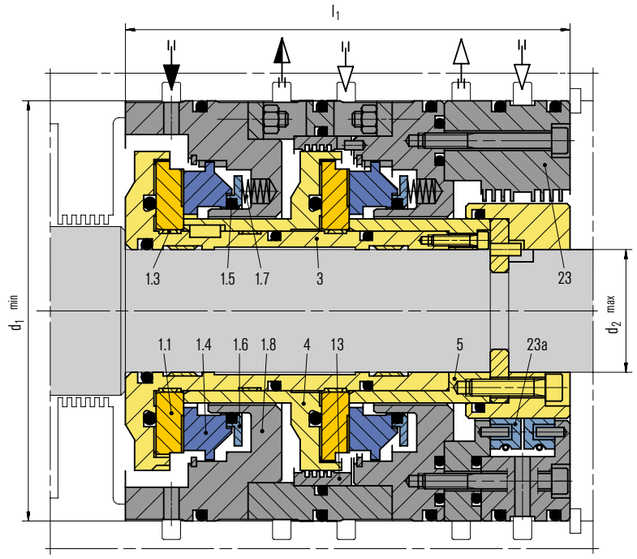

Features

- Gas-lubricated
- Independent of direction of rotation
- Single, double, tandem, tandem with intermediate labyrinth available

Operating range (see note on page 1)

Pressure: p = 0 ... 80 bar (0 ... 1,160 PSI)
(single and tandem seal),
−1 ... 20 bar (−15 ... 290 PSI) (double seal)
Temperature: t = −20 °C ... +200 °C (−4 °F ... +392 °F)
Sliding velocity: v_g = 4 ... 200 m/s (13 ... 656 ft/s)

Materials

Seal face: Carbon graphite antimony impregnated (A)
Seat: Silicon carbide (Q1) or ductile stainless steel with TiN-coating

Item	Description
1.1	Seat
1.3	Spring
1.4	Seal face
1.5	O-Ring
1.6	Thrust ring
1.7	Spring
1.8	Housing
3	Shaft sleeve
4	Adapter sleeve
5	Clamp sleeve
13	Labyrinth
23	Labyrinth seal
23a	Segmented seal

Recommended applications

- Oil and gas industry
- Refining technology
- Petrochemical industry
- Compressors

Dimensions in mm

d	$d_{1\ min.}$	$d_{2\ max.}$	l_1
38.1	94	38	88
50.8	110	52	95
57.2	118	58	98
63.5	126	64	101
76.2	142	77	108
88.9	158	90	114
101.6	178	102	120
114.3	198	115	126
127.0	218	128	132
139.7	237	140	137
152.4	257	153	143
177.8	297	178	161
203.2	337	204	172
228.6	376	229	184
254.0	416	255	195

CSR

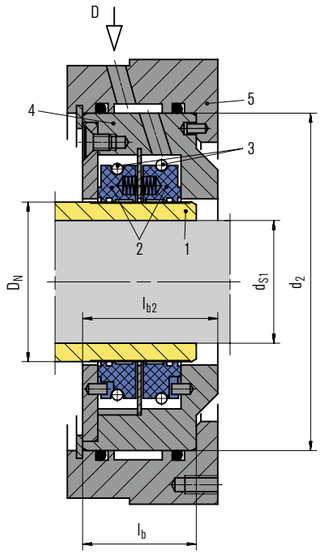

Features

- Lift-off type barrier seal
- Gas-lubricated
- Bi-directional
- Ready-to-fit cartridge unit

Advantages

The carbon ring seal with the lowest levels of buffer gas consumption. Lift-off type carbon ring seals are setting the benchmark among the existing oil barrier seals with regard to separation gas consumption. The profiled surface at the inner diameter of the segmented ring provides at circumferential speeds of > 10 m/s an aerodynamic lift-off and the segments are floating on a very small gas film.

Operating range (see note on page 1)

Shaft diameter: D_{s1} = 29.5 ... 299.5 mm (1.16" ... 11.79")
Pressure: p_2 dyn. 1.5 ... 2.2 bar a (21 ... 31 PSI), p_2 stat. ... 11 bar a (159 PSI)
Sliding velocity: v_g = 10 ... 200 m/s (32 ... 656 ft/s)
Temperature: t = –20 °C ... +200 °C (–4 °F ... +392 °F)
Barrier gas: Air or nitrogen
Dew point of barrier gas at operating pressure: –50 °C ... +20 °C (–58 °F ... +68 °F)
Run-out of shaft: max. 20 µm
Vibrations peak/peak (in the area of compressor bearing):
$S_{max} = 3.5 \times 25.4 \sqrt{12{,}000/n_{max}}$
S_{max} = 275 µm (short term)

Materials

Seal face: Carbon graphite impregnated
Secondary seals: FKM (V)
Metal parts: 1.4006 or other stainless steels.

Standards and approvals

- NACE

Item	Description
1	Shaft sleeve
2	Segmented carbon ring
3	Garter spring
4	Housing of standardized sub-cartridge
5	Housing (adapted in size to the installation space)
D	Separating gas

Note

Not applicable with barrier gases from cryogenic separation.

Recommended applications

- Oil and gas industry
- Refining technology
- Petrochemical industry
- Nitrogen
- Air
- Centrifugal compressors
- Blowers

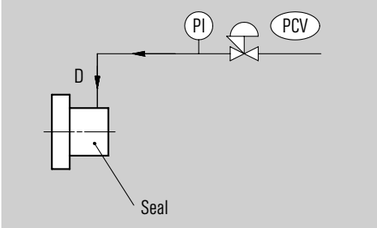

Piping and instrumentation diagram of a CSR (pressure controlled separating gas supply).

Dimensions in mm

DN	$d_{s1\ max.}$	$d_{2\ min.}$	l_b	l_{b2}
50	29.5	98	27	27
65	44.5	113	27	27
80	59.5	128	27	27
85	64.5	133	27	27
88	67.5	135	27	27
90	69.5	138	27	31
95	74.5	143	27	31
100	79.5	148	27	31
105	84.5	153	27	31
110	89.5	158	27	31
115	94.5	163	27	31
118	97.5	166	27	31
120	99.5	168	27	31
125	104.5	174	27	31
127	106.5	176	27	31
130	109.5	178	27	31
135	114.5	183	27	31
140	119.5	188	27	31
145	124.5	195	27	31
150	129.5	198	27	31
155	134.5	205	27	31
160	139.5	208	27	31
165	144.5	216	28	32
170	149.5	222	28	32
175	154.5	226	28	32
180	159.5	232	28	32
185	164.5	237	28	36.5
190	169.5	242	32.5	36.5
195	174.5	247	32.5	36.5
200	179.5	252	32.5	36.5
205	184.5	258	32.5	36.5
210	189.5	262	32.5	36.5
215	194.5	272	32.5	36.5
220	199.5	272	32.5	36.5
225	204.5	279	32.5	36.5
230	209.5	282	32.5	36.5
235	214.5	287	32.5	36.5
240	219.5	292	33.5	38.5
245	224.5	300	33.5	38.5
250	229.5	302	33.5	38.5
255	234.5	307	33.5	38.5
280	259.5	343	34.5	40
290	269.5	353	34.5	43.5
300	279.5	363	34.5	43.5
310	289.5	373	34.5	43.5
320	299.5	379	34.5	43.5

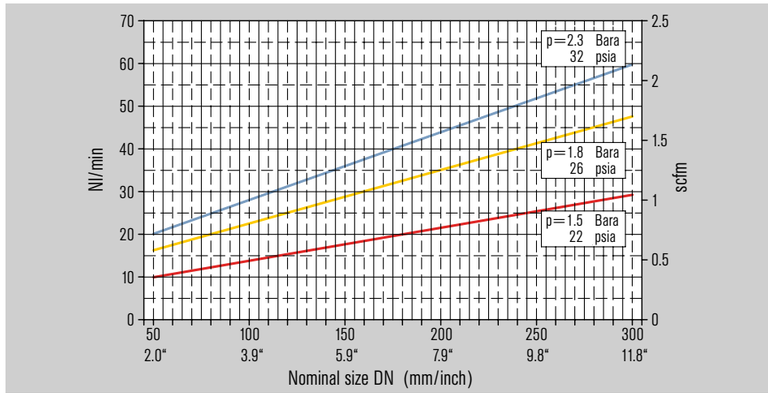

Separating gas comsumption (expected)
Gas: N2
Inlet temperature: 20 °C (68 °F)
Static and dynamic operation
Guaranteed gas consumption = curve value x 2

CSE

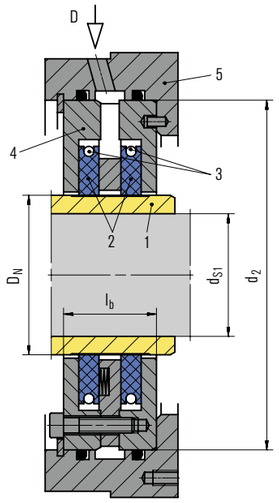

Features

- Non-contact type barrier seal
- Gas-lubricated
- Bi-directional
- Ready-to-fit cartridge unit
- Equipped with Espey carbon rings type WKA400

Advantages

The service-proven bearing oil seal with moderate levels of buffer gas consumption. Non contact type carbon rings are segmented rings hold together by a garter spring at the outer diameter. A defined minimum radial gap provides a contact-free operation. The gas consumption can be considered as moderate. The seal is sealing the oil properly and has proven to be very robust and reliable even at extreme conditions.

Operating range (see note on page 1)

Shaft diameter: D_{s1} = 29.5 ... 379.5 mm
(1.16" ... 14.94")
Barrier gas supply pressure: min. 3 bara (43 PSI)
Operating pressure: 0.05 ... 11 bara (0.7 ...159 PSI)
Sliding velocity: 0 ... 100 m/s (328 ft/s)*
Temperature: –20 °C ... +100 °C (–4 °F ... 212 °F)*
Barrier gas: Air or nitrogen
Dew point of barrier gas at operating pressure:
no limitations
Run-out of shaft: max. 20 µm*
Vibrations peak/peak (in the area of compressor bearing):
$S_{max} = 3.5 \times 25.4 \sqrt{12.000/n_{max}}$
S_{max} = 275 µm (short term)
* Can be exceeded with adjusted design

Materials

Seal face: Carbon graphite impregnated
Secondary seals: FKM (V)
Metal parts: 1.4006 and other stainless steels.

Standards and approvals

- NACE

Item	Description
1	Shaft sleeve
2	Segmented carbon ring
3	Garter spring
4	Housing of the standardized sub-cartridge
5	Housing (adapted in size to the installation space)
D	Separating gas

Recommended applications

- Oil and gas industry
- Refining technology
- Petrochemical industry
- Nitrogen
- Air
- Centrifugal compressors
- Turbo expanders
- Screw compressors
- Blowers

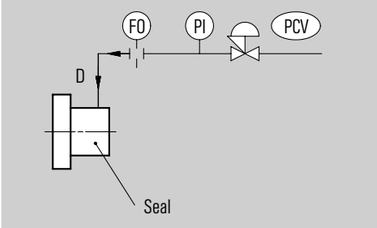

Piping and instrumentation diagram of a CSE
(flow controlled separating gas supply).

Dimensions in mm

D_N	$d_{s1\ max.}$	d_2	l_b
50	29.5	98	27
55	34.5	103	27
60	39.5	108	27
65	44.5	113	27
70	49.5	118	27
75	54.5	123	27
80	59.5	128	27
85	64.5	133	27
90	69.5	138	27
95	74.5	143	27
100	79.5	148	27
105	84.5	153	27
110	89.5	158	27
115	94.5	163	27
120	99.5	168	27
130	109.5	178	27
135	114.5	183	27
140	119.5	188	27
150	129.5	198	27
160	139.5	208	27
170	149.5	222	28
180	159.5	232	28
190	169.5	242	32.5
200	179.5	252	32.5
210	189.5	262	32.5
215	194.5	272	32.5
220	199.5	272	32.5
230	209.5	282	32.5
235	214.5	287	32.5
240	219.5	292	33.5
250	229.5	302	33.5
260	239.5	312	33.5
270	249.5	322	33.5
280	259.5	343	34.5
290	269.5	353	34.5
300	279.5	363	34.5
310	289.5	373	34.5
320	299.5	379	34.5
330	309.5	393	34.5
340	319.5	400	34.5
380	359.5	443	34.5
390	369.5	453	34.5
400	379.5	463	34.5

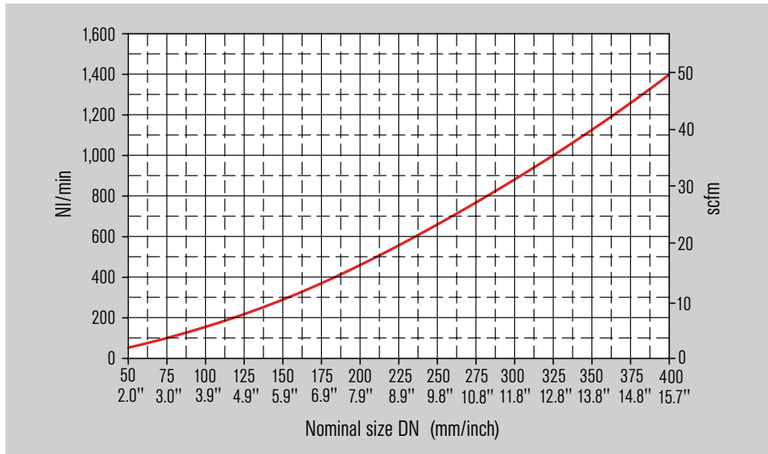

Gas flow rate towards seal (required to ensure safe oil separation in every condition).
Valid for flow controlled separating gas supply.

CobaSeal™

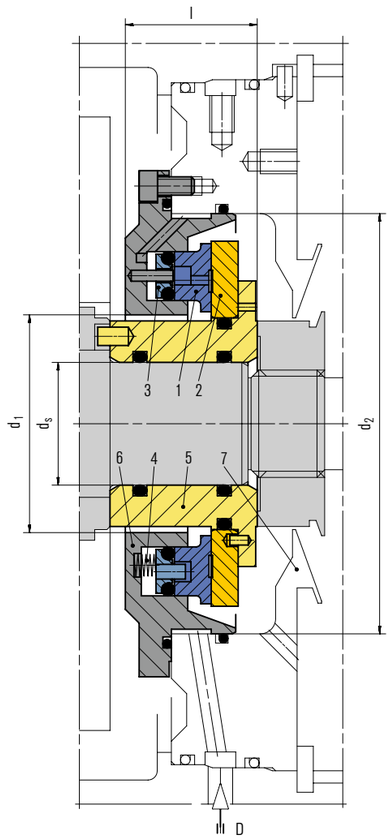

Features

- Gas-lubricated
- Bi-directional
- Aerostatic
- Ready-to-fit cartridge unit

Advantages

The revolutionary oil barrier/separation seal.
CobaSeal™, the oil barrier/separation seal for Dry Gas Seals, is a co-axial gas lubricated seal, which eliminates all disadvantages of existing systems such as labyrinths or radial carbon rings seals used currently in the industry.
The seal is designed similarly to a gas seal, consisting of a profiled ductile rotating seat and a stationary spring-loaded seal face. In contrast to conventional mechanical seal systems, the buffer gas is led through the seal face into the middle of the sliding face by means of axial bores.
The buffer gas is then separated into two leakage streams, both to the inside and the outside diameter of the sliding face. The coaxial seal is a dual system which is integrated in one sealing stage.
The aerostatic lift-off by means of differential pressure results in no wear or contact during operation. In combination of the state-of-the-art face material, the seal ensures reliable operation with dry buffer gases (typically nitrogen gas), reducing at the same time the buffer gas consumption considerably. There are also no restrictions whatsoever with regards to "slow roll", "turning gear" and "coast down" operation.
The profiled sealing face of the rotating seat ensures a stiff gas film and contact-free operation in case of equipment upsets, e. g. vibrations.

Item	Description
1	Seal face, stationary
2	Seat, rotating
3	Thrust ring
4	Spring
5	Shaft sleeve and seat retainer
6	Housing (adapted in size to the installation space)
7	Oil slinger ring
D	Separating gas

Operating range (see note on page 1)

Shaft diameter: 29.5 ... 179.5 mm (1.16" ... 7.00")
Pressure: p = 0 ... 10 bar (0 ... 145 PSI)
Temperature: t = −20 °C ... +200 °C (−4 °F ... +392 °F)
Sliding velocity: v_g = 0 ... 150 m/s (0 ... 492 ft/s)

Materials

Seal face: Silicon carbide (Q1) with DLC coating
Seat: Ductile stainless steel
Secondary seals: FKM (V)
Metal parts: 1.4006

Standards and approvals

- NACE

Recommended applications

- Oil and gas industry
- Refining technology
- Petrochemical industry
- Nitrogen
- Air
- Centrifugal compressors
- Blowers

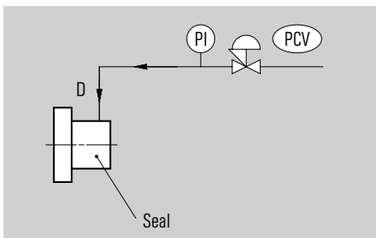

Piping and instrumentation diagram of a CobaSeal™ (pressure controlled separating gas supply).
Alternative solution: Differential pressure control for safe regulation of the separating gas pressure in any operating condition.

Dimensions in mm

D_N	D_S	d_1	d_2	l
50	29.5	47	98	31
55	34.5	52	103	31
60	39.5	57	108	31
65	44.5	62	113	31
70	49.5	67	118	31
75	54.5	72	123	31
80	59.5	77	128	31
85	64.5	82	133	31
90	69.5	87	138	31
95	74.5	92	143	32
100	79.5	97	148	32
105	84.5	102	153	32
110	89.5	107	158	33
115	94.5	112	163	32
120	99.5	117	168	33
130	109.5	127	178	32
135	114.5	132	183	33
140	119.5	137	188	33
150	129.5	147	198	33
160	139.5	156	208	37
170	149.5	166	222	37
180	159.5	176	232	37
190	169.5	186	242	39
200	179.5	196	252	39

Magnetic couplings

2

Uncompromising sealing technology for very demanding applications. Hermetically sealed magnetic couplings guarantee leakage-free and maintenance-free pumping and mixing. The media remains within closed system circulation loops.

Couplings
MAK™66 148
MAK™685 150
NMB High efficiency 152
SMAK 154

Bearings
LMF1 155

MAK™66

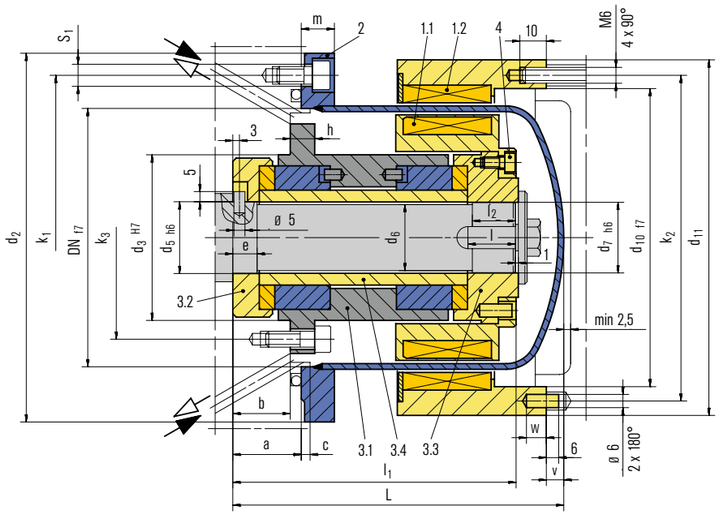

Features

Magnetic couplings (MAK) are a hermetic sealing solution for pumps and agitators. Dangerous or precious media remain isolated in the closed system circuit.

Advantages

- Magnetic coupling for standard applications
- Hermetically sealed
- No contact of torque transmitting elements
- No maintenance necessary
- Hastelloy® can for high performance
- High efficient can optional
- Product lubricated sliding bearing included

Functional description

The power transmission occurs contact-free through magnets from the drive shaft to the product-wetted output shaft. Between the two rotating parts is the can wich is bolted to the container.

Operating range (see note on page 1)

Pressure: p = 25 bar (363 PSI)
Temperature: t = 250 °C (482 °F) (SmCo),
120 °C (248 °F) (NdFeB)
Speed: n = 3,600 min^{-1}
Chemical resistance: pH 0 ... 14
Viscosity: 0.3 ... 5,000 mPas (SiC)
Torque: max. 462 Nm
Solids: max. 0.1 mm; max. 5 % by weight;
grain hardness max: 700 HV

Materials

Sliding faces: Silicon carbide SiC (Q1), Carbon silicon inpregnated SiC-C-Si (Q3), Carbon graphite resin impregnated (B)
Magnets: Samarium-Cobalt (MA3),
Neodymium-Iron-Boron (MA8)
Metal parts: CrNiMo steel 1.4571 (G), CrNiMo steel 1.4462 (G1), Hastelloy® C-4 2.4610 (M)

Item	Description
1	Coupling
1.1	Inner rotor
1.2	Outer rotor
2	Can
3	Bearing assembly
3.1	Radial journal bearing
3.2	Axial journal bearing
3.3	Axial journal bearing
3.4	Shaft sleeve
4	HSH cap screw

Recommended applications

- Chemical industry
- Oil and gas industry
- Refining technology
- Pharmaceutical industry
- Food processing industry
- Centrifugal pumps
- Gear pumps
- Top drive mixers/agitators
- Fans
- Blowers
- Autoclaves

Product variants

Different variants are available to meet specific requirements:
- Coolable or heatable bearing arrangements
- Vertical drive with dry running roller bearing
- High temperature variant
- Without bearing

Can variants:
- Double wall
- High pressure can
- Ceramic, PEEK carbon fiber, Titanium cans

Ceramic and PEEK carbon fiber cans

Static break-away torque (Nm)

DN		60		75		110		135		165	
No. of poles		8		10		16		20		24	
Material		MA3	MA8	MA3	MA8	MA3	MA8	MA3	MA8	MA3	MA8
	2	6.5	9	9	12.5	24					
Magnet	4	14.5	20	21	29	53	74	85		115	
length	6	22	31	34	48	85	119	128	180	185	259
in cm	8							176	247	260	364
	10									330	462

Static break-away torque (Nm) at room temperature.
Magnet material: MA3 = SmCo, MA8 = NdFeB

Dimensions in mm

			Can							Outer rotor				
DN	LK	L	DN	d_2	a	c	m	k_1	s_1	d_{10}	d_{11}	V	W	k_2
75	2-6	119	75	118	17	4	13	100	9	90	110	0	5	100
110	2-6	146	110	153	31	4	13	133	9	125	145	4	5	135
135	4-8	156	135	178	17	4	14	158	9	150	170	4	5	160
165	4-10	187	163.5	218	17	5	16	192	11	178	198	5	8	188
			Bearing arrangement											
DN	DNL	d_3	d_5	d_6	b	e	l_1	l_2	h	k_3	d_7	l	t	u
75	22	44	16.5	15.8	21	8	103	29	7	55	16	16	18	5
110	43	75	32.5	31.5	26	11	128.5	20	8	87	32	22	35	10
135	43	75	32.5	31.5	26	11	138.5	20	8	87	32	22	35	10
165	55	92	40.5	39.5	27	12	169.5	30	10	103	40	32	46	12

MAK™685

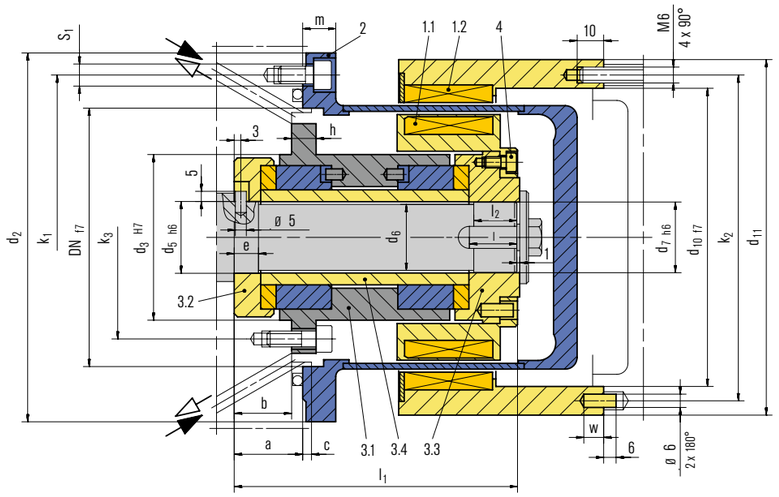

Features

Magnetic couplings (MAK) are a hermetic sealing solution for pumps and agitators. Dangerous or precious media remain isolated in the closed system circuit.

Advantages

- Magnetic coupling for applications acc. to API 685 (similar to API 610)
- Hermetically sealed
- Single seal
- No contact of torque transmitting elements
- No maintenance necessary
- Hastelloy® can for high performance
- High efficiency can optional
- Product-lubricated sliding bearings included

Functional description

The power transmission occurs contact-free through magnets from the drive shaft to the product-wetted output shaft. Between the two rotating parts is the can wich is bolted to the container.

Operating range (see note on page 1)

Pressure: p = 40 bar (580 PSI)
Temperature: t = 250 °C (482 °F) (SmCo),
120 °C (248 °F) (NdFeB)
Speed: n = 3,600 min^{-1}
Chemical resistance: pH 0 ... 14
Viscosity: 0.3 ... 5,000 mPas (SiC)
Torque: 462 Nm
Solids: max. 0.1 mm; max. 5 % by weight;
grain hardness max: 700 HV

Item	Description
1	Coupling
1.1	Inner rotor
1.2	Outer rotor
2	Can
3	Bearing assembly
3.1	Radial journal bearing
3.2	Axial journal bearing
3.3	Axial journal bearing
3.4	Shaft sleeve
4	HSH cap screw

Materials

Sliding faces: Silicon carbide SiC (Q1),
Carbon silicon inpregnated SiC-C-Si (Q3)
Carbon graphite resin impregnated (B)
Magnets: Samarium-Cobalt (MA3),
Neodymium-Iron-Boron (MA8)
Metal parts: CrNiMo steel 1.4571 (G), CrNiMo steel 1.4462 (G1), Hastelloy® C-4 2.4610 (M)

Standards and approvals

- API 685

Recommended applications

- Oil and gas industry
- Refining technology
- Centrifugal pumps

Product variants

Different variants are available to meet specific requirements:
- High temperature variant
- High pressure can
- PEEK carbon fiber can

PEEK carbon fiber can

Dimensions in mm

			Can							Outer rotor				
DN	LK	L	DN	d_2	a	c	m	k_1	s_1	d_{10}	d_{11}	V	W	k_2
75	2-6	119	75	118	17	4	13	100	9	90	110	0	5	100
110	2-6	156	110	168	31	4	22	133	13.5	125	145	4	5	135
135	4-8	156	135	188	17	4	20	158	11	150	170	4	5	160
165	4-10	198.5	163.5	218	17	5	22	192	11	178	198	5	8	188
			Bearing arrangement											
DN	DNL	d_3	d_5	d_6	b	e	l_1	l_2	h	k_3	d_7	l	t	u
75	22	44	16.5	15.8	21	8	103	29	7	55	16	16	18	5
110	43	75	32.5	31.5	26	11	128.5	20	8	87	32	22	35	10
135	43	75	32.5	31.5	26	11	138.5	20	8	87	32	22	35	10
165	55	92	40.5	39.5	27	12	169.5	30	10	103	40	32	46	12

NMB

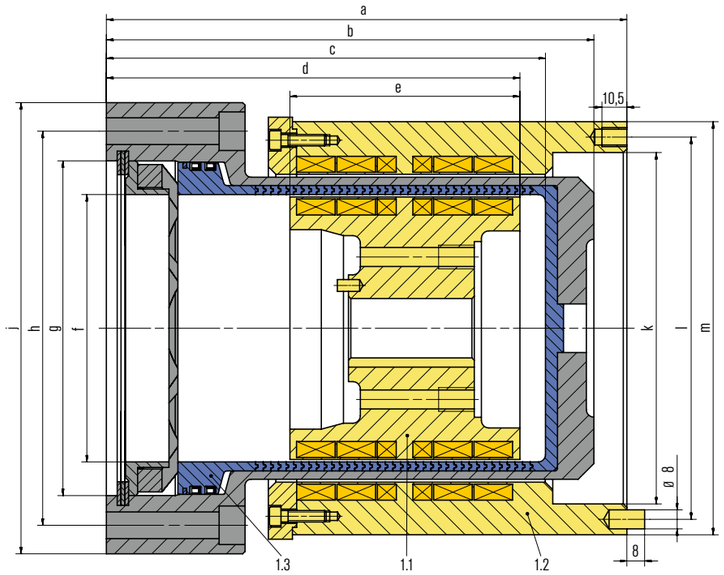

Features

The NMB series is used successful in many applications worldwide. The can is made from PTFE-seal insulated rings and a slotted outer can, which reduces EC-losses to a minimum. They are designed for increased safety and energy savings. Thus they can handle large motor torques, high speed and high pressure.

Advantages

- Magnetic coupling for applications acc. to API 685 (similar to API 610)
- Hermetically sealed
- No contact of torque transmitting elements
- No maintenance necessary
- High efficiency can (insulated rings and slotted outer can) for lowest eddy current losses (approx. 2 % of motor power)
- Increased safety and energy savings compared to solid Hastelloy® cans
- Sliding bearing optional

Functional description

The power transmission occurs contact-free through magnets from the drive shaft to the product wetted output shaft. Between the two rotating parts is the can wich is bolted to the container.

Operating range (see note on page 1)

Pressure: p = 45 bar (653 PSI)
Temperature: t = 250 °C (482 °F) (SmCo),
120 °C (248 °F) (NdFeB)
Torque: 18 ... 1,879 Nm

Item	Description
1.1	Inner rotor
1.2	Outer rotor
1.3	Can

Materials

Magnets: Samarium cobalt (MA3),
Neodymium iron boron (MA8)
Metal parts: CrNiMo steel 1.4401/1.4436, PTFE
Polytetrafluoroethylene (T)

Standards and approvals

- API 685

Recommended applications

- Chemical industry
- Oil and gas industry
- Refining technology
- Pharmaceutical industry
- Food processing industry
- Centrifugal pumps
- Gear pumps
- Top drive mixers/agitators
- Fans
- Blowers
- Autoclaves

Product variants

Different variants are available to meet specific requirements:
- Dry running roller bearing
- High temperature variant
- High pressure can
- Double wall can

Break-away torque (Nm)

Version	Samarium cobalt (SC2) Static break-away torque at 20 °C Nm	Samarium cobalt (SC2) Eddy current losses at 3,000 min-1 kW	Neodymium iron boron (ND2) Static break-away torque at 20 °C Nm	Neodymium iron boron (ND2) Eddy current losses at 3,000 min-1 kW
16P-2R-45	114	0.60	153	0.78
16P-3R-45	204	1.10	252	1.43
16P-4R-45	291	1.60	370	2.08
16P-5R-45	370	2.10	475	2.73
16P-6R-45	451	2.60	589	3.38
16P-7R-45	544	3.10	703	4.03
16P-8R-45	628	3.60	805	4.68
22P-4R-40	460	1.70	649	2.60
22P-5R-40	604	2.33	857	3.37
22P-6R-40	748	2.97	1,019	4.13
22P-7R-40	875	3.60	1,199	4.90
22P-8R-40	1,028	4.24	1,416	5.67
22P-9R-40	1,205	4.87	1,680	6.44
22P-10R-40	1,348	5.50	1,879	7.20

Dimensions in mm

	a	b	c	d	e	f	g	h	j	k	l
16P-2R	226.1	200.1	174.7	160	88.9	156.6	184.9	217.5	250	192	205
16P-3R	253.3	229.1	203.7	187.1	116.1	156.6	184.9	217.5	250	192	205
16P-4R	278.7	254.9	229.5	212.5	141.5	156.6	184.9	217.5	250	192	205
16P-5R	305.9	280.7	255.3	239.7	168.7	156.6	184.9	217.5	250	192	205
16P-6R	331.3	306.5	281.1	265.1	194.1	156.6	184.9	217.5	250	192	205
16P-7R	258.5	332.3	306.9	292.3	221.2	156.6	184.9	217.5	250	192	205
16P-8R	400	358.1	332.7	317.7	246.6	156.6	184.9	217.5	250	192	205
22P-4R	316.6	269.3	363.3	219	141.5	205.8	235.7	276.5	310	243	254
22P-5R	339.4	295.1	262.1	246.2	168.7	205.8	235.7	276.5	310	243	254
22P-6R	365.2	320.9	287.9	271.6	194.1	205.8	235.7	276.5	310	243	254
22P-7R	395	349.9	316.9	298.8	221.2	205.8	235.7	276.5	310	243	254
22P-8R	420.1	375.7	342.7	324.2	246.6	205.8	235.7	276.5	310	243	254
22P-9R	445.9	401.6	368.5	351.3	273.8	205.8	235.7	276.5	310	243	254
22P-10R	470	427.4	394.3	376.7	299.2	205.8	235.7	276.5	310	243	254

SMAK

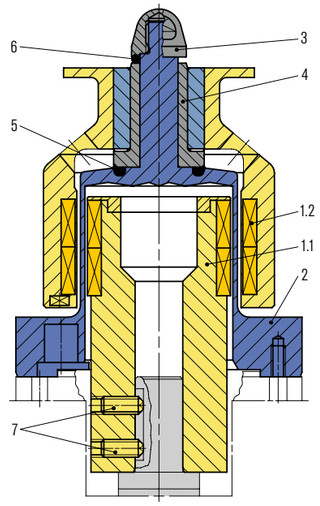

Features

Magnetic couplings of the SMAK series are used to transfer torque into mixers and agitators. Top drive, bottom drive or lateral drive. Dangerous or precious media remain isolated in the closed vessel.

Advantages

- Magnetic coupling for mixers and agitators
- Hermetically sealed
- Sterile design
- Encapsulated magnets in the product space and Electro-polished surfaces when in contact with the product
- No contamination by buffer media
- No contact of torque transmitting elements
- No maintenance necessary
- Sliding bearing for bottom drives included
- Speed monitoring optional
- Weld-in or screw-in flanges available

Functional description

The power transmission occurs contact-free through magnets from the drive shaft to the product wetted output shaft. Between the two rotating parts is the can wich is bolted to the container.

Operating range (see note on page 1)

Temperature: t = 250 °C (482 °F) (SmCo),
120 °C (248 °F) (NdFeB)
Speed: n = 3,600 min^{-1}
Chemical resistance: pH 0 ... 14
Viscosity: 0.3 ... 5,000 mPas (SiC)
Torque: max. 270 Nm (bottom drive); 330 Nm (top drive)
Solids: max. 0.1 mm; max. 5 % by weight;
grain hardness max: 700 HV

Materials

Sliding faces: Silicon carbide SiC (Q1)
Magnets: Samarium cobalt (MA3),
Neodymium iron boron (MA8)
Metal parts: CrNiMo steel 1.4571 (G)

Dimensions

Dimensions on request

Item	Description
1.1	Inner rotor
1.2	Outer rotor
2	Can
3	Nut
4	Bearing bushing
5	O-Ring
6	O-Ring
7	Set screw

Standards and approvals

- Material approvals: QHD, GMP, FDA

Recommended applications

- Chemical industry
- Pharmaceutical industry
- Food processing industry
- Agitators
- Mixers

LMF1

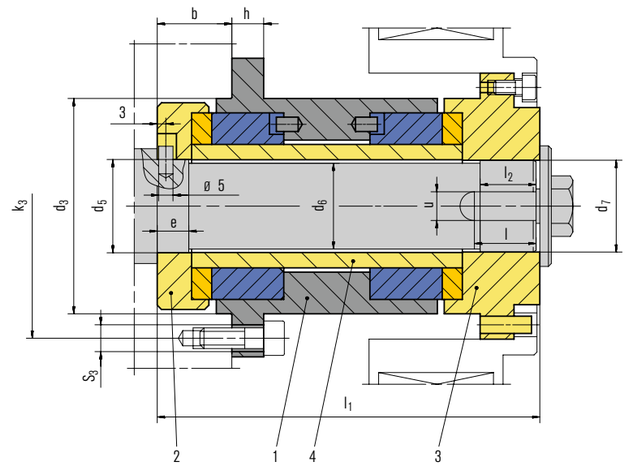

Features

Sliding bearings are used for the shaft end in magnetic coupled centrifugal or displacement pumps. The sliding parts are made of SiC. The pump liquid is circulating between the rotating and static parts to ensure lubrication and cooling. EagleBurgmann LMF bearings are successfully used for many years in applications worldwide. They are almost wearless and therefore extremely durable.

Advantages

- Sliding bearing for the shaft end of an impeller in a pump
- Self lubrication through pump liquid
- Adapted to MAK66 magnetic couplings

Functional description

The shaft end es connected to the shaft sleeve and two bearing rings for the axial bearing forces. It is running against the static radial/axial bearing unit.

Operating range (see note on page 1)

Viscosity: 0.3 ... 5,000 mPas
Speed: 750 ... 3,600 min^{-1}
Solids: max. 0.1 mm; max. 5 % by weight;
grain hardness max: 700 HV

Item	Description
1	Radial journal bearing
2	Axial journal bearing
3	Axial journal bearing
4	Shaft sleeve

Materials

Sliding faces: Silicon carbide SiC (Q1), Carbon silicon impregnated SiC-C-Si (Q3), Carbon graphite resin impregnated (B)
Metal parts: CrNiMo steel 1.4462 (G1)

Recommended applications

- Chemical industry
- Oil and gas industry
- Refining technology
- Pharmaceutical industry
- Food processing industry
- Centrifugal pumps
- Gear pumps

Product variants

- Variants for low (–110 °C (230 °F)) and high temperature (... +400 °C (752 °F)) and variants with heatable or cooable chamber available.
- DiamondFace® coating for applications with partly dry running, solids, liquids with poor lubrication properties.

Dimensions in mm

	d_3	d_5	d_6	b	e	l_1	l_2	h	k_3	n_3	s_3	d_7	l	t	u
LMF1-22/54-00	44	16.5	15.8	21	8	103	29	7	55	5	5.5	16	16	18	5
LMF1-43/80-00	75	32.5	31.5	26	11	128.5	20	8	87	5	6.6	32	22	35	10
LMF1-43/90-00	75	32.5	31.5	26	11	138.5	20	8	87	5	6.6	32	22	35	10
LMF1-55/110-00	92	40.5	39.5	27	12	169.5	30	10	103	5	6.6	40	32	46	12

Carbon floating ring seals

3

Carbon floating ring seals are supplied as maintenance free compact labyrinth cartridge seals with low leakage. The floating self-adjusting sealing rings provide radial sealing on the shaft with a very small gap. The seal requires no additional lubrication, and it is designed for dry running. Besides pure gas, carbon floating ring seals are also suitable for ATEX applications, toxic media, media containing solids, flue gas, dust, powder, vapor, liquid mist, oil mist and penetrating oil.

Espey Shaft seals

WKA3 158
WD200 160
WDK-BHS 162
WDKS-Eco 164
WD500 166
WD200/500 168
WDMS500 170
WKA300 172
WKA250ND 174
WKA400HD 176
WKA802HD 178
WKA1100HP 180

Espey Shaft sleeves

WDB200 182

Espey WKA3

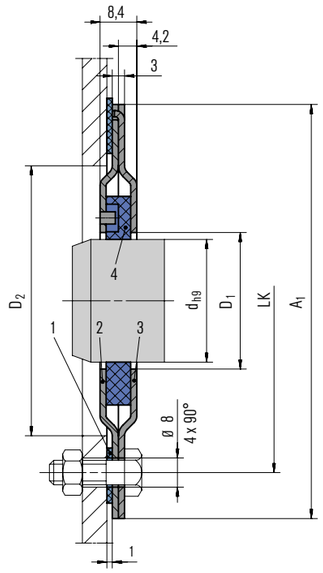

Features

- Cartridge seal
- Standardized dimensions
- Short axial installation length (8.4 mm)
- Dry running
- Compensation of radial and axial shaft deflections
- No sealing components mounted on the shaft and hence no additional shaft vibrations
- Seal rings running contact-free – sliding faces and machine consume no additional power
- One-piece seal ring (initial delivery)

Advantages

- Easy installation
- High reliability
- Maintainability
- Long-term operating time
- Alternative to radial shaft seal ring

Operating range (see note on page 1)

Shaft diameter: d = 28 ... 80 mm (1.10" ... 3.15")
Operating pressure: p = 1.075 bar (15 PSI) abs.
Operating temperature: t = max. +200 °C (392 °F)
Sliding velocity: v_g = max. 40 m/s (131 ft/s)
Radial play: ±2.0 ... 4.0 mm (±0.08" ... 0.16")
Axial movement: theoretically unlimited

Item	Description
1	Flat seal
2	Housing half
3	Housing half
4	Seal ring

Materials

Seal ring: PTFE compound
Housing: 1.4301
Tension spring: 1.4571

Standards and approvals

- Material approvals: FDA

Recommended applications

- Chemical industry
- Food processing industry
- Machinery and plant building
- Pulp and paper industry
- Metal production and processing
- Small and medium-sized fans/blowers
- Air regulating devices
- Bearing seals
- Clean gases*

* Not applicable for toxic, solids containing gases and exhaust gas

Dimensions in mm

d_{h9}	D_1	D_2	A_1	LK	RB	RC
28	36	70	100	90	35	30
30	36	70	100	90	35	30
32	36	70	100	90	35	30
38	46	80	110	100	40	35
40	46	80	110	100	40	35
42	46	80	110	100	40	35
50	56	94	130	120	45	40
60	66	104	140	130	50	45
70	76	114	150	140	55	50
80	86	124	160	150	60	55

Espey WD200

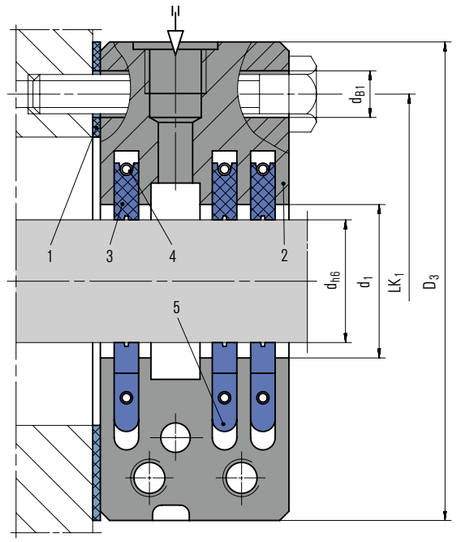

Features

- Multi-part seal rings, radially cut
- Split housing design
- Very small operation gap – low leakage
- Dry running
- Self-adjusting seal rings
- Compensation of radial and axial shaft deflections
- No sealing components mounted on the shaft and hence no additional shaft vibrations
- Seal rings running contact-free – sliding faces and machine consume no additional power

Advantages

- Easy installation by split housing design (shaft removal not required)
- High reliability
- Maintainability
- Segmented seal rings for easy replacement
- Maintenance-free

Operating range (see note on page 1)

Shaft diameter: d = 40 ... 340 mm (1.57" ... 13.39")
Operating pressure: p = vacuum ... 20 bar (290 PSI) abs.
Operating temperature: t = –120 °C ... +800 °C
(–184 °F ... +1,472 °F) for carbon,
max. 225 °C (437 °F) for PTFE compound
Sliding velocity: v_g = max. 150 m/s (492 ft/s) for carbon,
max. 40 m/s (131 ft/s) for PTFE compound
Radial play: ±1.0 ... 5.0 mm (±0.04" ... 0.2")
Axial movement: theoretically unlimited
Recommended wear guard: > 300 HB (low pressure),
> 58 HRC (high pressure)

Materials

Seal ring: Carbon, PTFE compound
Housing: 1.4021, 1.4571, Hastelloy®, Titanium, Inconel®, others
Tension spring/detent: 1.4571, Hastelloy®, Titanium, Inconel®

Standards and approvals

- Material approvals: FDA

Item	Description
1	Flat seal
2	Housing, 2-piece
3	Seal ring
4	Tension spring
5	Detent

Recommended applications

- Chemical industry
- Waste incineration and removal industry
- Power plant technology
- Petrochemical industry
- Food processing industry
- Metal production and processing
- Medium-sized and large fans/blowers
- Bearing seals (gear box, motors)
- Steam turbines
- Mixers, agitators, mills, dryers
- Gases
- Fumes and exhaust, solids containing, flammable (ATEX), acid containing and toxic gases
- (Solids containing) steams/liquid mist
- Oil mist/penetrating oil
- Water

Espey WD200 split design

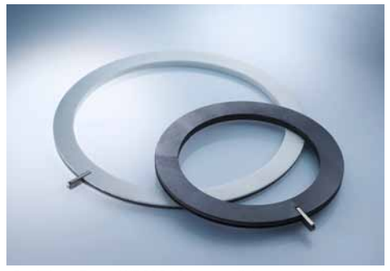

Seal rings Espey WD200 (3-part, radial cut) – carbon/PTFE compound

Product variants

Espey WD200-WDK with short design and grease barrier port – type WDKF in addition with reduced outside housing diameter (for clean media, not for solids containing gases).

For toxic and solids containing gases as well as ATEX applications type shaft seal Espey WD200-WDKS with short design, reduced housing outside diameter and barrier gas port is used.

Espey WD200-WDSA with barrier gas and grease barrier port (for e. g. toxic and solids containing gases with condensate formation as well as ATEX applications).

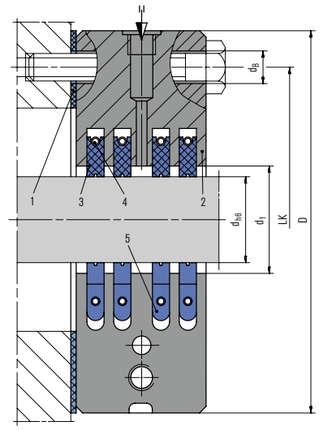

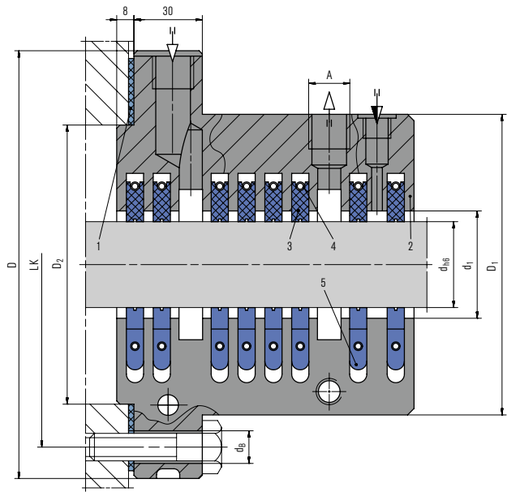

Dimensions in mm

For all types			For types WDK, WDS, WDA, WDSA						For types WDKS, WDKF		
d_{h6}	$d_{1\ ND}$	$d_{1\ HD}$	D	D_1	D_2	LK	A	d_B	D_3	LK_1	d_{B1}
45	50	48	210	140	115	175	G1/2	15	165	135	15
50	58	54	220	150	125	185	G1/2	15	170	140	15
60	68	64	230	160	135	195	G3/4	15	180	150	15
70	78	74	240	170	145	205	G3/4	15	190	160	15
80	90	84	260	180	155	220	G3/4	15	200	170	15
90	100	94	270	190	165	230	G3/4	15	210	180	15
100	110	104	280	200	175	240	G1	15	220	190	15
110	120	114	290	210	185	250	G1	15	230	200	15
120	130	124	300	220	195	260	G1	15	240	210	15
130	140	134	310	230	205	270	G1	15	250	220	15
140	150	144	320	240	215	280	G1	15	260	230	15
150	160	154	330	250	225	290	G1	15	270	240	15
160	170	164	340	260	235	300	G1	19	280	250	15
170	180	174	350	270	245	310	G1	19	290	260	15
180	190	184	360	280	255	320	G1	19	300	270	15
190	200	194	370	290	265	330	G1	19	310	280	15
200	210	204	420	310	275	365	G1	15	320	290	15
220	230	224	440	330	295	385	G1	15	340	310	15
240	250	244	460	350	315	405	G1	19	360	330	15
260	270	264	480	370	335	425	G1	19	380	350	15
280	290	284	500	390	355	445	G1	19	400	370	15
300	310	304	520	410	375	465	G1	19	420	390	15
320	330	324	540	430	395	485	G1	19	440	410	15
340	350	344	560	450	415	505	G1	19	460	430	15

ND= Low pressure
HD= High pressure
Special sizes on request.

Espey WDK-BHS

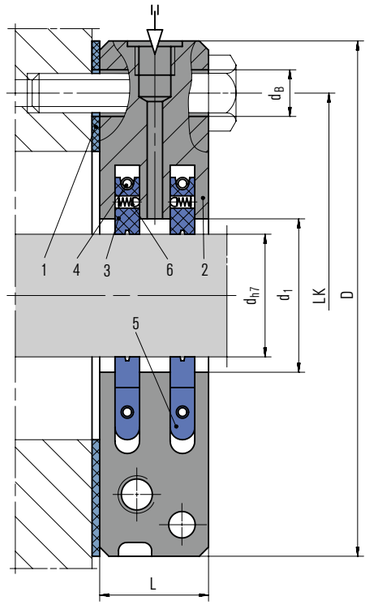

Features

- Multi-part seal rings, radially cut
- Split housing design
- Short axial installation length (max. 36 mm)
- Very small operation gap
- Dry running
- Self-adjusting seal rings
- Compensation of radial and axial shaft deflections
- Seals on both sides of the shaft
- Resistant to sea water
- No sealing components mounted on the shaft and hence no additional shaft vibrations
- Seal rings running contact-free – sliding faces and machine consume no additional power

Advantages

- Easy installation by split housing design (shaft removal not required)
- High reliability
- Maintainability
- Segmented seal rings for easy replacement
- Maintenance-free

Operating range (see note on page 1)

Shaft diameter: d = 40 ... 800 mm (1.57" ... 31.5")
Operating pressure: p = vacuum ... 3 bar (43 PSI) abs.
Operating temperature: t = max. 225 °C (437 °F)
Sliding velocity: v_g = max. 40 m/s (131 ft/s)
Radial play: ±5.0 mm (±0.2") (depending on shaft diameter)
Axial movement: theoretically unlimited
Angular deviation: ±2° (central installation, depending on shaft diameter)

Item	Description
1	Flat seal
2	Housing, 2-piece
3	Seal ring
4	Tension spring
5	Detent
6	Spring

Recommended applications

- Shipbuilding
- Drive shafts in ships, bulkheads
- Sea water, water

Materials

Seal ring: PTFE compound
Housing: 1.4021, AlMg
Tension spring/detent: 1.4571
Plug: 1.4571/copper

Standards and approvals

- ISO 9001, Germanischer Lloyd, ABS – American Bureau of Shipping, Bureau Veritas, Lloyd's Register EMEA, Det Norske Veritas, Russian Maritime Register of Shipping

Dimensions in mm

d_{h7}	d_1	D	L	LK	n x a	d_B
40	45	160	30	130	4 x 90°	15
45	50	165	30	135	4 x 90°	15
50	58	170	30	140	4 x 90°	15
60	68	180	30	150	4 x 90°	15
70	78	190	30	160	4 x 90°	15
80	90	200	30	170	4 x 90°	15
90	100	210	30	180	4 x 90°	15
100	110	220	30	190	4 x 90°	15
110	120	230	30	200	4 x 90°	15
120	130	240	30	210	4 x 90°	15
130	140	250	30	220	4 x 90°	15
140	150	260	30	230	4 x 90°	15
150	160	270	30	240	4 x 90°	15
160	170	280	30	250	4 x 90°	15
170	180	290	30	260	6 x 60°	15
180	190	300	30	270	6 x 60°	15
190	200	310	30	280	6 x 60°	15
200	210	320	30	290	6 x 60°	15
220	230	340	30	310	6 x 60°	15
240	250	360	30	330	6 x 60°	15
260	270	380	30	350	6 x 60°	15
280	290	400	30	370	6 x 60°	15
300	310	420	30	390	6 x 60°	15
320	330	440	30	410	6 x 60°	15
340	350	460	30	430	6 x 60°	15
350	360	470	30	440	8 x 45°	15
400	410	520	30	490	8 x 45°	15
450	460	570	30	540	8 x 45°	15
500	510	620	30	590	8 x 45°	15
550	560	670	30	640	8 x 45°	15
600	610	720	30	690	8 x 45°	15
650	660	770	36	740	12 x 45°	15
700	710	820	36	790	12 x 45°	19
750	760	870	36	840	12 x 45°	19
800	810	920	36	890	12 x 45°	19

Special sizes on request.

Espey WDKS-Eco

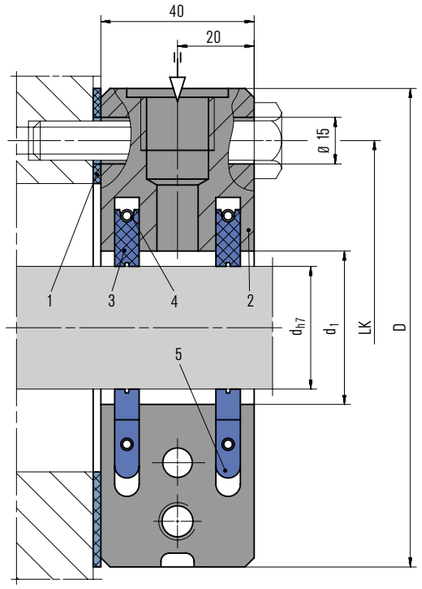

Features

- Multi-part seal rings, radially cut
- Split housing design
- Very small operation gap – low leakage
- Dry running
- Self-adjusting seal rings
- Compensation of radial and axial shaft deflections
- Short axial installation length
- Standardized dimensions
- No sealing components mounted on the shaft and hence no additional shaft vibrations
- Seal rings running contact-free – sliding faces and machine consume no additional power

Advantages

- Easy installation by split housing design (shaft removal not required)
- High reliability
- Maintainability
- Segmented seal rings for easy replacement
- Maintenance-free

Operating range (see note on page 1)

Shaft diameter: d = 45 ... 160 mm (1.77" ... 6.3")
Operating pressure: p = vacuum ... 1.5 bar (21 PSI) abs.
Operating temperature: t = –120 °C ... +500 °C
(–184 °F ... +932 °F) for carbon,
max. 225 °C (437 °F) for PTFE compound,
max. 300 °C (572 °F) with grease
Sliding velocity: v_g = max. 150 m/s (492 ft/s) for carbon,
max. 40 m/s (131 ft/s) for PTFE compound
Radial play: ±2.5 ... 5.0 mm (±0.1" ... 0.2")
Axial movement: theoretically unlimited
Recommended wear guard: > 300 HB (low pressure)

Item	Description
1	Flat seal
2	Housing, 2-piece
3	Seal ring
4	Tension spring
5	Detent

Materials

Seal ring: Carbon, PTFE compound
Housing: 1.4021, 1.4571
Tension spring/detent: 1.4571

Standards and approvals

- Material approvals: FDA

Recommended applications

- Chemical industry
- Metal production and processing
- Pulp and paper industry
- Food processing industry
- Power plant technology
- Small and medium-sized fans/blowers
- Bearing seals (gear box, motors)
- Mixers, agitators, mills, dryers
- (Solids containing) gases
- (Solids containing) steams/liquid mist
- Oil mist/penetrating oil
- Water

Product variants

Espey WDKS-Eco with 3 seal rings.

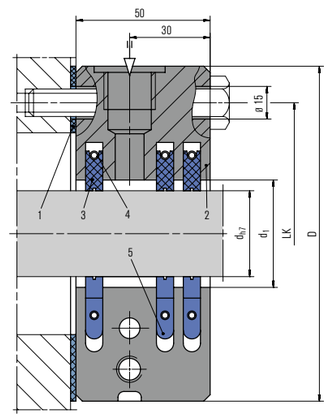

Espey WDKS-Eco with 4 seal rings.

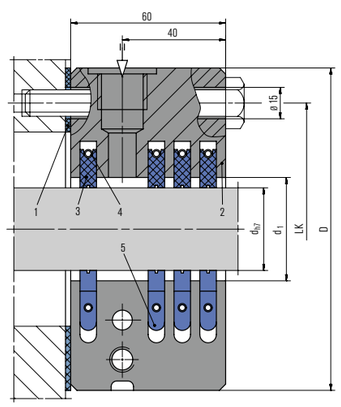

Dimensions in mm

d_{h7}	d_1	D	LK
45	50	165	135
50	58	170	140
60	68	180	150
70	78	190	160
80	90	200	170
90	100	210	180
100	110	220	190
110	120	230	200
120	130	240	210
130	140	250	220
140	150	260	230
150	160	270	240
160	170	280	250

Special sizes on request.

Espey WD500

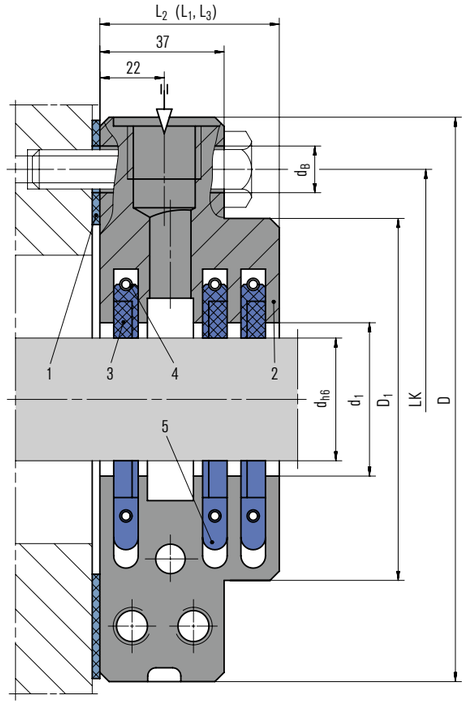

Features

- Multi-part seal rings, overlapped mortised with gas tight joints
- Split housing design
- Lowest possible operation gap – lowest leakage
- Overlapped mortised seal rings
- Dry-running
- Self-adjusting seal rings
- Compensation of radial and axial shaft deflections
- Short axial installation length
- No sealing components mounted on the shaft and hence no additional shaft vibrations

Advantages

- Easy installation by split housing design (shaft removal not required)
- High reliability
- Maintainability
- Segmented seal rings for easy replacement
- Maintenance-free

Operating range (see note on page 1)

Shaft diameter: d = 45 ... 340 mm (1.77" ... 13.89")
Operating pressure: p = vacuum ... 3 bar (43 PSI) abs. (depends on peripheral velocity)
Operating temperature: t = −120 °C ... +500 °C (−184 °F ... +932 °F) for carbon
[700 °C (1,292 °F) for blast furnaces],
−120 °C ... +150 °C (−184 °F ... +302 °F) for PTFE compound
Sliding velocity: v_g = max. 40 m/s (131 ft/s)
Radial play: ±2.5 ... 5.0 mm (±0.1" ... 0.2")
Axial movement: theoretically unlimited
Recommended wear guard: > 58 HRC

Item	Description
1	Flat seal
2	Housing, 2-piece
3	Seal ring
4	Tension spring
5	Detent

Materials

Seal ring: Carbon, PTFE compound
Housing: 1.4021, 1.4571, Hastelloy®, Titanium, Inconel®, others
Tension spring/detent: 1.4571, Hastelloy®, Titanium, Inconel®

Standards and approvals

- Material approvals: FDA

Recommended applications

- Chemical industry
- Waste incineration and removal industry
- Pulp and paper industry
- Lime, cement and gypsum industry
- Mining industry
- Water and waste water technology
- Medium-sized and large fans/blowers
- Bearing seals (gear box, motors)
- Steam turbines
- Mixers, agitators, dryers
- Mills (ball, hammer, beater mills)
- Centrifuges
- Gases
- Fumes and exhaust, solids containing, flammable (ATEX), acid containing and toxic gases
- (Solids containing) steams/liquid mist
- Oil mist/penetrating oil
- Water

Product variants

Espey WD500-WDA for applications involving condensate formation to enable directed throwing off to the outside of the housing (not for solids containing gases). For toxic and solids containing gases type shaft seal Espey WD500-WDS with barrier gas port is used. Special seals of type Espey WD500 amongst others are seals for coal and cement mills or blast furnaces.

Espey WD500-WDK with short design (for clean media, not for solids containing gases).

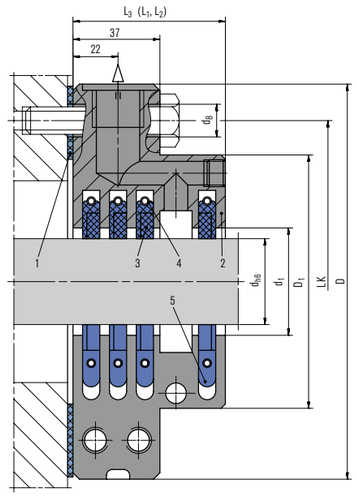

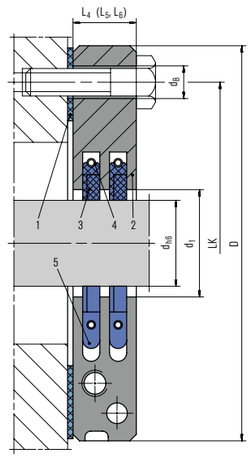

Dimensions in mm

For all types						For types WDS, WDA			For type WDK		
d_{h6}	d_1	D	D_1	d_B	LK	L_1	L_2	L_3	L_4	L_5	L_6
45	50	210	140	15	175	47	59	71	28	40	52
50	58	220	150	15	185	47	59	71	28	40	52
60	68	230	160	15	195	47	59	71	28	40	52
70	78	240	170	15	205	47	59	71	28	40	52
80	90	260	180	15	220	47	59	71	28	40	52
90	100	270	190	15	230	47	59	71	28	40	52
100	110	280	200	15	240	51	65	79	32	46	60
110	120	290	210	15	250	51	65	79	32	46	60
120	130	300	220	15	260	51	65	79	32	46	60
130	140	310	230	15	270	51	65	79	32	46	60
140	150	320	240	15	280	51	65	79	32	46	60
150	160	330	250	15	290	51	65	79	32	46	60
160	170	340	260	19	300	51	65	79	32	46	60
170	180	350	270	19	310	51	65	79	32	46	60
180	190	360	280	19	320	51	65	79	32	46	60
190	200	370	290	19	330	51	65	79	32	46	60
200	210	420	310	15	365	55	71	87	36	52	68
220	230	440	330	15	385	55	71	87	36	52	68
240	250	460	350	15	405	55	71	87	36	52	68
260	270	480	370	19	425	55	71	87	36	52	68
280	290	500	390	19	445	55	71	87	36	52	68
300	310	520	410	19	465	55	71	87	36	52	68
320	330	540	430	19	485	55	71	87	36	52	68
340	350	560	450	19	505	55	71	87	36	52	68

Special sizes on request. Special dimensions for e. g. blast furnaces, mills and dryers up to d = 4,000 mm

Espey WD200/500

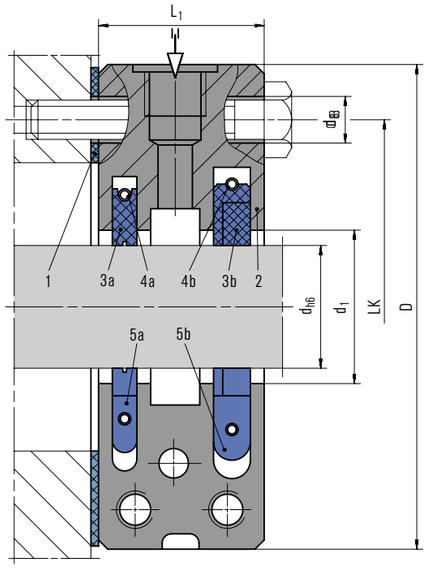

Features

- Multi-part seal rings, radially cut on process side, overlapped mortised with gas tight joints on atmosphere side
- Split housing design
- Lowest possible operation gap – lowest leakage
- Radially cut and overlapped mortised seal rings
- Dry-running
- Self-adjusting seal rings
- Compensation of radial and axial shaft deflections
- Short axial installation length
- No sealing components mounted on the shaft and hence no additional shaft vibrations

Advantages

- Easy installation by split housing design (shaft removal not required)
- High reliability
- Maintainability
- Segmented seal rings for easy replacement
- Maintenance-free

Operating range (see note on page 1)

Shaft diameter: d = 45 ... 340 mm (1.77" ... 13.89")
Operating pressure: p = vacuum ... 3 bar (43 PSI) abs. (depends on peripheral velocity)
Operating temperature: t = −120 °C ... +500 °C (−184 °F ... +932 °F) for carbon,
−120 °C ... +150 °C (−184 °F ... +302 °F) for PTFE compound
Sliding velocity: v_g = max. 40 m/s (131 ft/s)
Radial play: ±2.5 ... 5.0 mm (±0.1" ... 0.2")
Axial movement: theoretically unlimited
Recommended wear guard: > 58 HRC

Item	Description
1	Flat seal
2	Housing, 2-piece
3a	Seal ring WD200
3b	Seal ring WD500
4a	Tension spring WD200
4b	Tension spring WD500
5a	Detent WD200
5b	Detent WD500

Materials

Seal ring: Carbon, PTFE compound
Housing: 1.4021, 1.4571, Hastelloy®, Titanium, Inconel®, others
Tension spring/detent: 1.4571, Hastelloy®, Titanium, Inconel®

Standards and approvals

- Material approvals: FDA

Recommended applications

- Chemical industry
- Waste incineration and removal industry
- Metal production and processing
- Pulp and paper industry
- Lime, cement and gypsum industry
- Food processing industry
- Power plant technology
- Machinery and plant building
- Medium-sized and large fans/blowers
- Bearing seals (gear box, motors)
- Steam turbines
- Mixers, agitators, dryers
- Mills (ball, hammer, beater mills)
- Centrifuges
- Cantilever pumps
- Gases
- Fumes and exhaust, solids containing, flammable (ATEX), acid containing and toxic gases
- (Solids containing) steams/liquid mist
- Oil mist/penetrating oil
- Water

Product variants

Espey WD200/500-WD1S2 with barrier gas port. The arrangement guarantees a focused barrier gas flow to the process side and keeps gases, solids and mists off the sealing area. In addition the leakage to the outside is reduced.

Espey WD200/500-WD1S2A1 with barrier gas port and recirculation. The arrangement guarantees a focused barrier gas flow to the process side and keeps gases, solids and mists off the sealing area. In addition the leakage to the outside is reduced and residual gases and condensates will be purged.

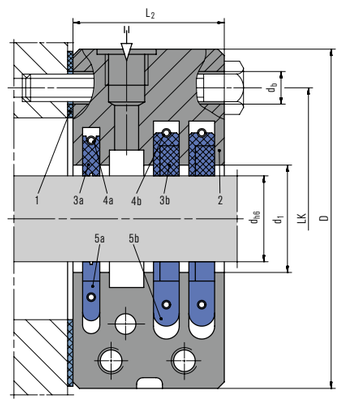

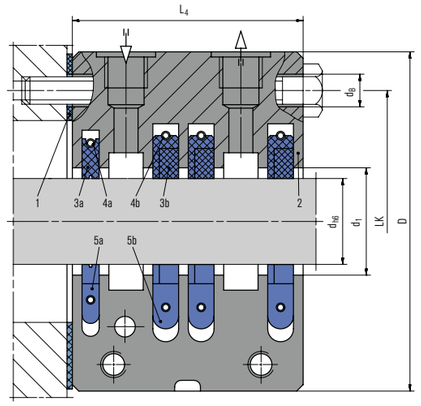

Dimensions in mm

d_{h6}	d_1	D	LK	n x Ød$_B$	S	V	L_1	L_2	L_3	L_4
45	50	175	135	4 x Ø15	1 x G1/2	1 x G1/2	45	55	70	85
50	58	180	140	4 x Ø15	1 x G1/2	1 x G1/2	45	55	70	85
60	70	190	150	4 x Ø15	1 x G1/2	1 x G1/2	45	55	70	85
70	80	200	160	4 x Ø15	1 x G1/2	1 x G1/2	45	55	70	85
80	90	210	170	4 x Ø15	1 x G1/2	1 x G1/2	45	55	70	85
90	100	220	180	4 x Ø15	1 x G1/2	1 x G1/2	45	55	70	85
100	110	230	190	4 x Ø15	1 x G1/2	1 x G1/2	50	60	75	90
110	120	240	200	4 x Ø15	1 x G1/2	1 x G1/2	50	60	75	90
120	130	250	210	4 x Ø15	1 x G1/2	1 x G1/2	50	60	75	90
130	140	260	220	4 x Ø15	1 x G1/2	1 x G1/2	50	60	75	90
140	150	270	230	4 x Ø15	1 x G1/2	1 x G1/2	50	60	75	90
150	160	280	240	4 x Ø15	1 x G1/2	1 x G1/2	50	60	75	90
160	170	290	250	4 x Ø15	1 x G1/2	1 x G1/2	50	60	75	90
170	180	300	260	6 x Ø19	1 x G1/2	1 x G1/2	50	60	75	90
180	190	310	270	6 x Ø19	1 x G1/2	1 x G1/2	50	60	75	90
190	200	320	280	6 x Ø19	1 x G1/2	1 x G1/2	50	60	75	90
200	210	340	290	6 x Ø19	2 x G1/2	1 x G1/2	50	65	80	95
210	220	350	300	6 x Ø19	2 x G1/2	1 x G1/2	50	65	80	95
220	230	360	310	6 x Ø19	2 x G1/2	1 x G1/2	50	65	80	95
230	240	370	320	6 x Ø19	2 x G1/2	1 x G1/2	50	65	80	95
240	250	380	330	6 x Ø19	2 x G1/2	1 x G1/2	50	65	80	95
250	260	390	340	6 x Ø19	2 x G1/2	1 x G1/2	50	65	80	95
260	270	400	350	6 x Ø19	2 x G1/2	1 x G1/2	50	65	80	95
270	280	410	360	6 x Ø19	2 x G1/2	1 x G1/2	50	65	80	95
280	290	420	370	6 x Ø19	2 x G1/2	1 x G1/2	50	65	80	95
290	300	430	380	6 x Ø19	2 x G1/2	1 x G1/2	50	65	80	95
300	310	440	390	6 x Ø19	2 x G1/2	1 x G1/2	50	65	80	95
310	320	450	400	6 x Ø19	2 x G1/2	1 x G1/2	50	65	80	95
320	330	460	410	6 x Ø19	2 x G1/2	1 x G1/2	50	65	80	95
330	340	470	420	6 x Ø19	2 x G1/2	1 x G1/2	50	65	80	95
340	350	480	430	6 x Ø19	2 x G1/2	1 x G1/2	50	65	80	95

S= Barrier gas port
V= Recirculation
Special sizes on request.

Espey WDMS500

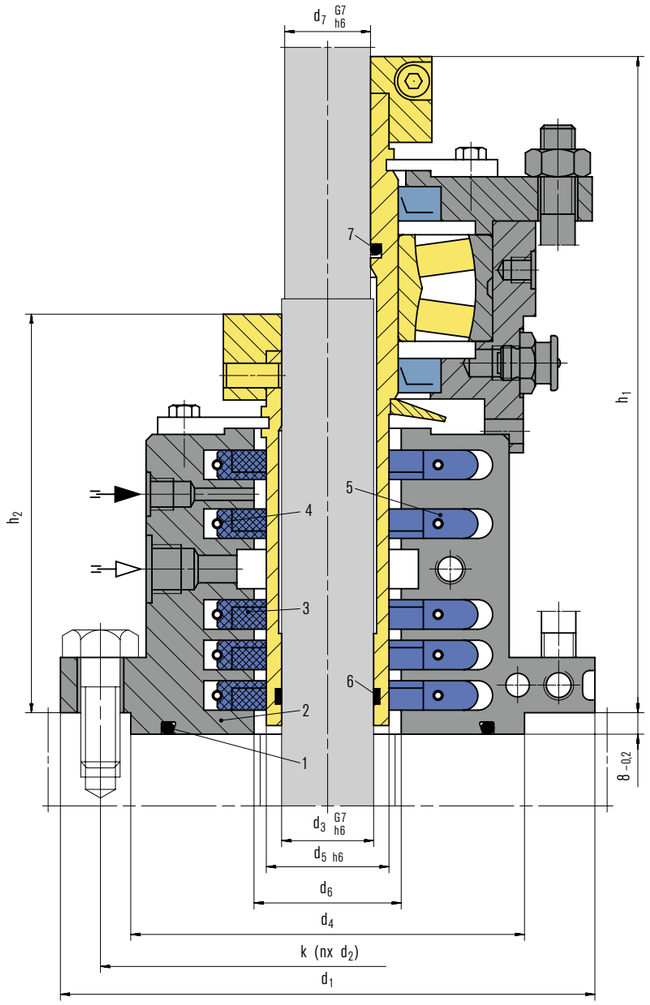

Features

- Multipart seal rings, overlapped mortized with gas-tight joints
- Split housing design
- Lowest possible operation gap – lowest leakage
- Suitable for pressure reversal by overlapped mortised seal rings
- Dry-running
- Self-adjusting seal rings
- Compensation of large radial and axial shaft deflections
- No sealing components mounted on the shaft and hence no additional shaft vibrations
- Cooling sealing area for high temperature applications not required

Advantages

- Easy installation by split housing design (shaft removal not required)
- High reliability
- Maintainability
- Segmented seal rings for easy replacement
- Maintenance-free
- Robust

Operating range

Shaft diameter: d = 40 ... 220 mm (1.57" ... 8.66")
Operating pressure: p = vacuum ... 6 bar (87 PSI) abs.
Operating temperature: t = –40 °C ... +500 °C (–40 °F ... +932 °F) for carbon,
–40 °C ... +200 °C (–40 °F ... +392 °F) for PTFE compound
Sliding velocity: v_g = max. 5 m/s (16 ft/s)
Radial play: ±5.0 mm (±0.2")
Axial movement: theoretically unlimited (version without bearing), ±2.0 mm (±0.08") (version with bearing)
Recommended war guard: >58 HRC

Materials

Seal ring: Carbon, PTFE compound
Housing: 1.4571, others
Tension spring/detent: 1.4571

Standards and approvals

- DIN 28154
- DIN 28138
- Material approvals: FDA

Item	Description
1	O-Ring flange
2	Housing, 2-piece
3	Seal ring
4	Tension spring
5	Detent
6	O-Ring shaft sleeve
7	O-Ring bearing

Recommended applications

- Chemical industry
- Petrochemical industry
- Food processing industry
- Water and waste water technology
- Gases*
- Solids containing, flammable (ATEX), toxic gases*
- (Solids containing) steams/liquid mist*
- Oil mist/penetrating oil*
- Dust/powder*
- Agitators
- Mixers
- Dryers
- Filters

* Sealing area

Seal ring Espey WDMS500

Dimensions in mm

d_3	d_7	d_5	d_6	d_4	d_1	k	n	d_2	h_1	h_2
40	38	50	58	110	175	145	4	18	213	135
50	48	60	68	176	240	210	8	18	221	140
60	58	70	78	176	240	210	8	18	235	150
80	78	90	100	204	275	240	8	22	260	160
100	98	110	120	234	305	270	8	22	283	165
125	120	140	150	260	330	295	8	22	309	170
140	135	160	170	313	395	350	12	22	337	185
160	150	180	190	313	395	350	12	22	337	185
180	170	200	210	364	445	400	12	22	369	195
200	190	220	230	364	445	400	12	22	381	195
220	210	240	250	422	505	460	16	22	401	205

Special sizes on request.

Espey WKA300

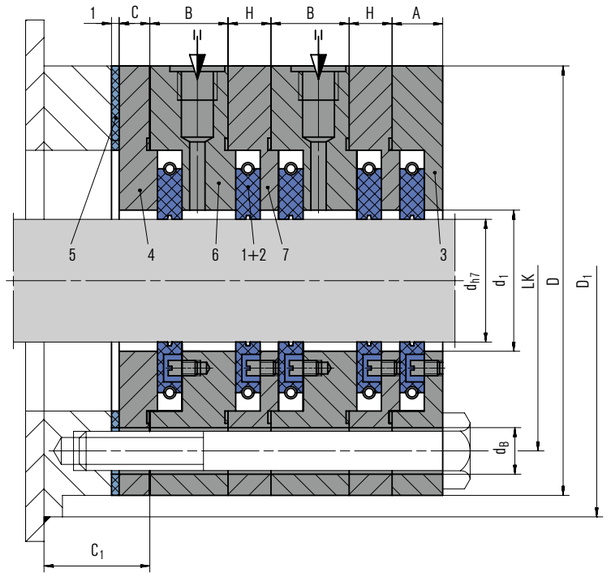

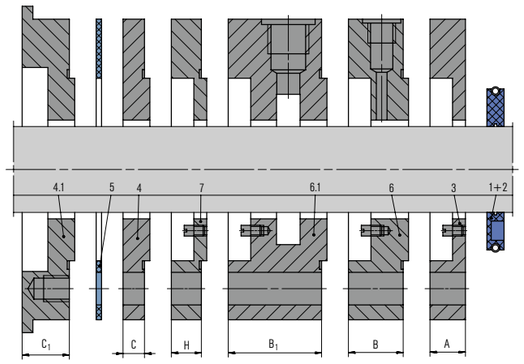

Features

- Multi-part seal rings, radially cut
- Chamber seal (modular design)
- Very small operation gap – low leakage
- Dry running
- Self-adjusting seal rings
- Compensation of radial and axial shaft deflections
- No sealing components mounted on the shaft and hence no additional shaft vibrations
- Seal rings running contact-free – sliding faces and machine consume no additional power

Advantages

- High reliability
- Maintainability
- Segmented seal rings for easy replacement
- Maintenance-free

Operating range (see note on page 1)

Shaft diameter: d = 20 ... 340 mm (0.79" ... 13.39")
Operating pressure: p = vacuum ... 1.5 bar (22 PSI) abs.
Operating temperature: t = –120 °C ... +500 °C
(–184 °F ... +932 °F) for carbon,
max. 225 °C (437 °F) for PTFE compound,
max. 300 °C (572 °F) with grease
Sliding velocity: v_g = max. 150 m/s (492 ft/s) for carbon,
max. 40 m/s (131 ft/s) for PTFE compound
Radial play: ±2.0 mm (±0.08")
Axial movement: theoretically unlimited
Recommended wear guard: > 300 HB

Item	Description
1	Seal ring
2	Tension spring
3	Chamber
4	End ring
4.1	Welding ring (as alternative)
5	Flat seal
6	Grease chamber
6.1	Barrier gas, suction chamber
7	Intermediate chamber

Materials

Seal ring: Carbon, PTFE compound
Chamber parts: 1.4571, Hastelloy®, Titanium, Inconel®, others
Tension spring: 1.4571, Hastelloy®, Titanium, Inconel®

Standards and approvals

- Material approvals: FDA

Recommended applications

- Chemical industry
- Metal production and processing
- Pulp and paper industry
- Food processing industry
- Power plant technology
- Machinery and plant building
- Small and medium-sized fans/blowers
- Bearing seals (gear box, motors)
- Mixers, agitators, mills, dryers
- Gases
- Fumes and exhaust, solids containing, flammable (ATEX), acid containing and toxic gases
- (Solids containing) steams/liquid mist
- Oil mist/penetrating oil
- Water

Product variants

Espey WKA301/4
(up to 225 °C (437 °F)) or Espey WKA302/4
(up to 500 °C (932 °F)) for clean media, not for solids containing gases.

Espey WKA303.2/4
(up to 225 °C (437 °F)) or Espey WKA304.2/4
(up to 500 °C (932 °F)) with barrier gas port for toxic and solids containing media as well as ATEX applications.

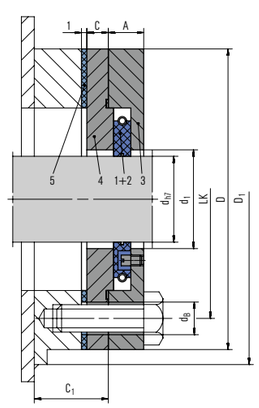

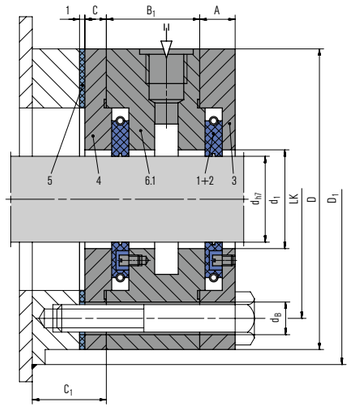

Dimensions in mm

d_{h7}	d_1	d_B	D	D_1	LK	A	B	B_1	C	C_1	H
20	24	10	95	110	75	12	21	38	5	21	10
25	29	10	100	115	80	12	21	38	5	21	10
30	34	10	105	120	85	12	21	38	5	21	10
35	39	10	110	125	90	12	21	38	5	21	10
40	44	10	115	130	95	12	21	38	5	21	10
45	49	12	130	145	105	12	21	38	5	30	10
50	54	12	140	155	115	12	21	38	5	30	10
55	59	12	145	160	120	12	21	38	5	30	10
60	64	12	150	165	125	12	21	38	5	30	10
65	69	12	155	170	130	12	21	38	5	30	10
70	74	12	160	175	135	12	21	38	5	30	10
75	79	12	165	180	140	12	21	38	5	30	10
80	84	12	170	185	145	12	21	38	5	30	10
85	89	12	175	190	150	12	21	38	5	30	10
90	94	12	180	195	155	12	21	38	5	30	10
95	99	12	185	200	160	12	21	38	5	30	10
100	104	12	190	205	165	12	21	38	5	30	10
105	109	12	195	210	170	12	21	38	5	30	10
110	114	12	200	215	175	12	21	38	5	30	10
120	124	14	220	235	190	14	23	40	7	30	12
130	134	14	230	245	200	14	23	40	7	30	12
140	144	14	240	255	210	14	23	40	7	30	12
150	154	14	250	265	220	14	23	40	7	30	12
160	164	14	260	275	230	14	23	40	7	30	12
170	174	14	270	285	240	14	23	40	7	30	12
180	184	14	280	295	250	14	23	40	7	30	12
190	194	14	290	305	260	14	23	40	7	30	12
200	204	14	300	315	270	14	23	40	7	30	12
210	214	14	310	325	280	16	23	40	10	30	14
220	224	14	320	335	290	16	23	40	10	30	14
230	234	14	330	345	300	16	23	40	10	30	14
240	244	14	340	355	310	16	23	40	10	30	14
250	254	14	350	365	320	16	23	40	10	30	14
260	264	14	360	375	330	16	23	40	10	30	14
270	274	14	370	385	340	16	23	40	10	30	14
280	284	14	380	395	350	16	23	40	10	30	14
290	294	14	390	405	360	16	23	40	10	30	14
300	304	14	400	415	370	16	23	40	10	30	14

Special sizes on request.

Espey WKA250ND

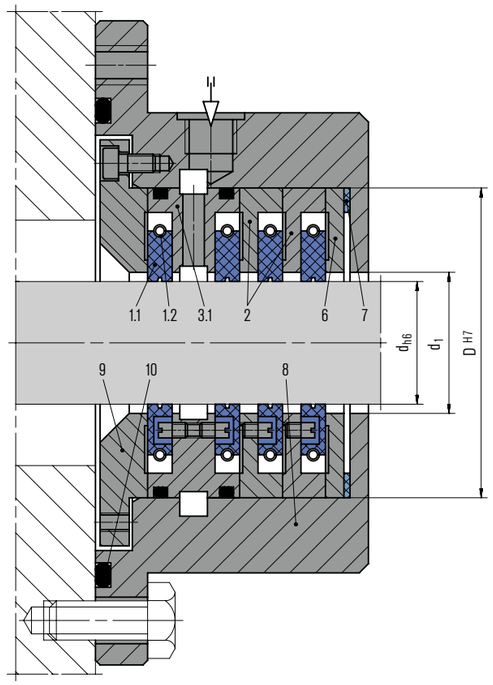

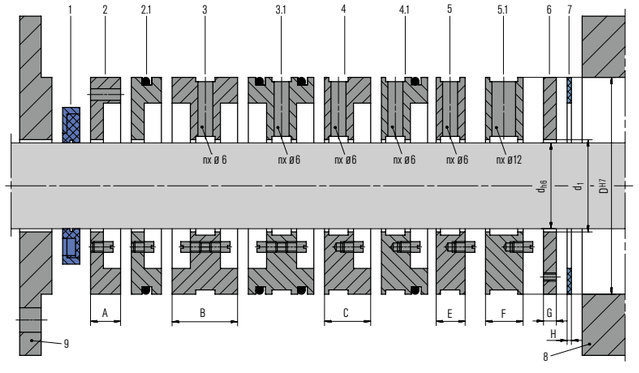

Features

- Chamber seal (modular design), optional with housing and lid
- Multi-part seal rings, radially cut
- Very small operation gap – low leakage
- Dry running
- Self-adjusting seal rings
- Compensation of radial and axial shaft deflections
- No sealing components mounted on the shaft and hence no additional shaft vibrations
- Seal rings running contact-free – sliding faces and machine consume no additional power
- Balanced seal ring inside chamber

Advantages

- High reliability
- Maintainability
- Segmented seal rings for easy replacement
- Maintenance-free

Operating range (see note on page 1)

Shaft diameter: d = 20 ... 340 mm (0.79" ... 13.39")
Operating pressure: p = vacuum ... 15 bar (217 PSI) abs.
Operating temperature: t = –120 °C ... +500 °C
(–184 °F ... +932 °F) for carbon,
max. 225 °C (437 °F) for PTFE compound
Sliding velocity: v_g = max. 240 m/s (787 ft/s) for carbon,
max. 40 m/s (131 ft/s) for PTFE compound
Radial play: ±2.0 mm (±0.08")
Axial movement: theoretically unlimited
Recommended wear guard: > 58 HRC

Materials

Seal ring: Carbon, PTFE compound
Chamber and housing parts: 1.4021, 1.4571, Hastelloy®, Titanium, Inconel®, others
Tension spring: 1.4571, Hastelloy®, Titanium, Inconel®
Secondardy seal (elastomer): Fluorocarbon rubber (Viton®), Nitrile-butadiene-rubber (Perbunan®), Perfluorocarbon rubber (Kalrez®)
Secondary seal (gasket): Statotherm®-HT/HD, KSiL C 4400

Standards and approvals

- Material approvals: FDA

Item	Description	Variable for width
1.1	Seal ring	
1.2	Tension spring	
2	Chamber	A
2.1	Chamber with O-Ring	A
3	Barrier gas chamber	B
3.1	Barrier gas chamber with O-Rings	B
4	Lantern chamber	C
4.1	Lantern chamber with O-Ring	C
5	Lantern thin	E
5.1	Lantern wide	F
6	End ring	G
7	Flat seal	H
8*	Housing	
9*	Lid	
10*	O-Ring housing	

* On request

Recommended applications

- Chemical and petrochemical industry
- Pulp and paper industry
- Metal production and processing
- Power plant technology
- Integral-gear compressors (one or multi-stage)
- Screw and chiller compressors
- Steam turbines
- Regulating devices
- Gases
- Fumes and exhaust, solids containing, flammable (ATEX), acid containing and toxic gases
- (Solids containing) steams/liquid mist
- Oil mist/penetrating oil
- Water
- Oil and gas industry
- Refining technology

Dimensions in mm

d_{h6}	D^{H7}	d_1	A	B	C	E	F	G	H
20	60	22	8	21	16	11	–	5	1
25	65	27	8	21	16	11	–	5	1
30	70	32	8	21	16	11	–	5	1
35	75	37	8	21	16	11	–	5	1
40	80	42	8	21	16	11	–	5	1
45	90	47	8	21	16	11	–	5	1
50	100	52	8	21	16	11	17	5	1
55	105	57	8	21	16	11	17	5	1
60	110	62	8	21	16	11	17	5	1
65	115	67	8	21	16	11	17	5	1
70	120	72	8	21	16	11	17	5	1
75	125	77	8	21	16	11	17	5	1
80	130	82	8	21	16	11	17	5	1
85	135	87	8	21	16	11	17	5	1
90	140	92	8	21	16	11	17	5	1
95	145	97	8	21	16	11	17	5	1
100	150	102	8	21	16	11	17	5	1
105	155	107	8	21	16	11	17	5	1
110	160	112	8	21	16	11	17	5	1
115	165	117	8	21	16	11	17	5	1
120	190	123	10	27	21	15	20	8	2
130	200	133	10	27	21	15	20	8	2
140	210	143	10	27	21	15	20	8	2
150	220	153	10	27	21	15	20	8	2
160	230	163	10	27	21	15	20	8	2
170	240	173	10	27	21	15	20	8	2
180	250	183	10	27	21	15	20	8	2
190	260	193	10	27	21	15	20	8	2
200	270	203	10	27	21	15	20	8	2
210	280	213	10	27	21	15	20	8	2
220	290	223	10	27	21	15	20	8	2
230	300	233	10	27	21	15	20	8	2
240	310	243	10	27	21	15	20	8	2
250	320	253	10	27	21	15	20	8	2
260	330	263	10	27	21	15	20	8	2
270	340	273	10	27	21	15	20	8	2
280	350	283	10	27	21	15	20	8	2
290	360	293	10	27	21	15	20	8	2
300	370	303	10	27	21	15	20	8	2

Special sizes on request.

Espey WKA400HD

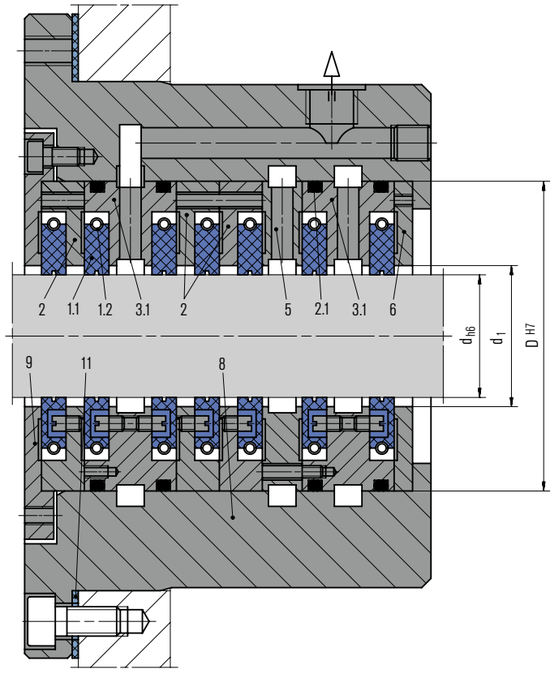

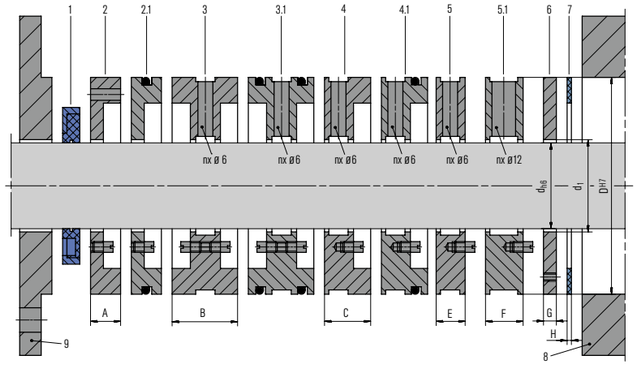

Features

- Chamber seal (modular design), optional with housing and lid
- Multi-part seal rings, radially cut
- Very small operation gap – low leakage
- Dry running
- Self-adjusting seal rings
- Compensation of radial and axial shaft deflections
- No sealing components mounted on the shaft and hence no additional shaft vibrations
- Seal rings running contact-free – sliding faces and machine consume no additional power
- Balanced seal ring inside chamber

Advantages

- High reliability
- Maintainability
- Segmented seal rings for easy replacement
- Maintenance-free

Operating range (see note on page 1)

Shaft diameter: d = 20 ... 340 mm (0.79" ... 13.39")
Operating pressure: p = vacuum ... 75 bar (1,087 PSI) abs.
Operating temperature: t = –120 °C ... +500 °C (–184 °F ... +932 °F)
Sliding velocity: v_g = max. 240 m/s (787 ft/s)
Radial play: ±1.0 ... 2.0 mm (±0.04" ... 0.08")
Axial movement: theoretically unlimited
Recommended wear guard: > 58 HRC

Materials

Seal ring: Carbon
Chamber and housing parts: 1.4021, 1.4571, Hastelloy®, Titanium, Inconel®, others
Tension spring: 1.4571, Hastelloy®, Titanium, Inconel®
Secondardy seal (elastomer): Fluorocarbon rubber (Viton®), Nitrile-butadiene-rubber (Perbunan®), Perfluorocarbon rubber (Kalrez®)
Secondary seal (gasket): Statotherm®-HT/HD, KSiL C 4400

Standards and approvals

- Material approvals: FDA

Item	Description	Variable for width
1.1	Seal ring	
1.2	Tension spring	
2	Chamber	A
2.1	Chamber with O-Ring	A
3	Barrier gas chamber	B
3.1	Barrier gas chamber with O-Rings	B
4	Lantern chamber	C
4.1	Lantern chamber with O-Ring	C
5	Lantern thin	E
5.1	Lantern wide	F
6	End ring	G
7	Flat seal	H
8*	Housing	
9*	Lid	
11*	Flat seal housing	

* On request

Recommended applications

- Oil and gas industry
- Refining technology
- Chemical industriy
- Petrochemical industry
- Pulp and paper industry
- Metal production and processing
- Power plant technology
- Integral-gear compressors (one or multi-stage)
- Screw and chiller compressors
- Steam turbines
- Regulating devices
- Gases
- Fumes and exhaust, solids containing, flammable (ATEX), acid containing and toxic gases
- (Solids containing) steams/liquid mist
- Oil mist/penetrating oil
- Water

Dimensions in mm

d_{h6}	D^{H7}	d_1	A	B	C	E	F	G	H
20	60	22	10	21	16	11	–	5	1
25	65	27	10	21	16	11	–	5	1
30	70	32	10	21	16	11	–	5	1
35	75	37	10	21	16	11	–	5	1
40	80	42	10	21	16	11	–	5	1
45	90	47	10	21	16	11	–	5	1
50	100	52	10	21	16	11	17	5	1
55	105	57	10	21	16	11	17	5	1
60	110	62	10	21	16	11	17	5	1
65	115	67	10	21	16	11	17	5	1
70	120	72	10	21	16	11	17	5	1
75	125	77	10	21	16	11	17	5	1
80	130	82	10	21	16	11	17	5	1
85	135	87	10	21	16	11	17	5	1
90	140	92	10	21	16	11	17	5	1
95	145	97	10	21	16	11	17	5	1
100	150	102	10	21	16	11	17	5	1
105	155	107	10	21	16	11	17	5	1
110	160	112	10	21	16	11	17	5	1
115	165	117	10	21	16	11	17	5	1
120	190	123	12	27	21	15	20	8	2
130	200	133	12	27	21	15	20	8	2
140	210	143	12	27	21	15	20	8	2
150	220	153	12	27	21	15	20	8	2
160	230	163	12	27	21	15	20	8	2
170	240	173	12	27	21	15	20	8	2
180	250	183	12	27	21	15	20	8	2
190	260	193	12	27	21	15	20	8	2
200	270	203	12	27	21	15	20	8	2
210	280	213	12	27	21	15	20	8	2
220	290	223	12	27	21	15	20	8	2
230	300	233	12	27	21	15	20	8	2
240	310	243	12	27	21	15	20	8	2
250	320	253	12	27	21	15	20	8	2
260	330	263	12	27	21	15	20	8	2
270	340	273	12	27	21	15	20	8	2
280	350	283	12	27	21	15	20	8	2
290	360	293	12	27	21	15	20	8	2
300	370	303	12	27	21	15	20	8	2

Special sizes on request.

Espey WKA802HD

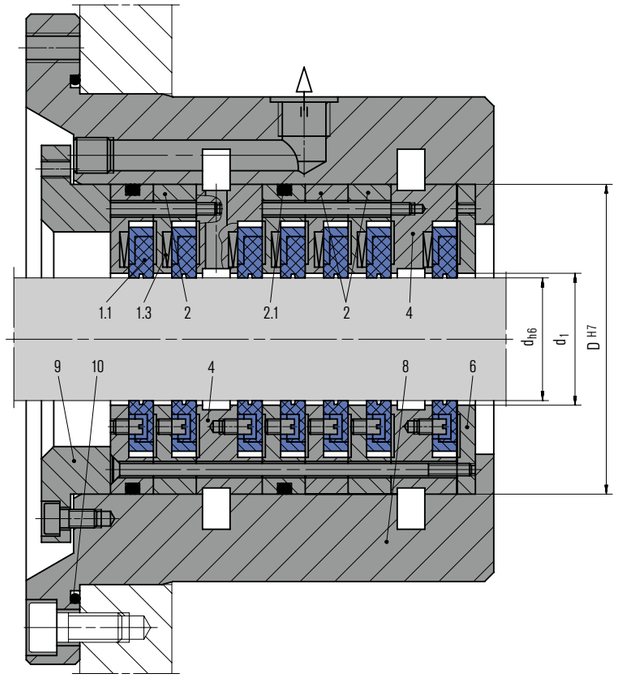

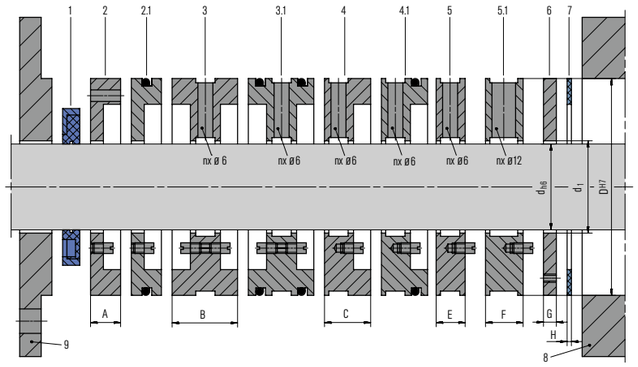

Features

- Chamber seal (modular design), optional with housing and lid
- Very small operation gap – low leakage
- Dry running
- Compensation of radial and axial shaft deflections
- No sealing components mounted on the shaft and hence no additional shaft vibrations
- Seal rings running contact-free – sliding faces and machine consume no additional power
- One-piece seal ring with titanium bandage
- Balanced seal ring inside chamber
- Seal ring axially spring-loaded – no swinging up at pressure-less machine operation

Advantages

- High reliability
- Maintainability
- Maintenance-free

Operating range (see note on page 1)

Shaft diameter: d = 20 ... 200 mm (0.79" ... 7.87")
Operating pressure: p = vacuum ... 140 bar (2,030 PSI) abs.
Operating temperature: t = –120 °C ... +225 °C (–184 °F ... +437 °F)
Sliding velocity: v_g = max. 240 m/s (787 ft/s)
Radial play: ±1.0 mm (±0.04")
Axial movement: theoretically unlimited
Recommended wear guard: > 58 HRC

Materials

Seal ring: Carbon with titanium bandage
Chamber and housing parts: 1.4021, 1.4571, Hastelloy®, Titanium, Inconel®, others
Secondardy seal (elastomer): Fluorocarbon rubber (Viton®), Nitrile-butadiene-rubber (Perbunan®), Perfluorocarbon rubber (Kalrez®)
Secondary seal (gasket): Statotherm®-HT/HD, KSiL C 4400

Standards and approvals

- Material approvals: FDA

Item	Description	Variable for width
1.1	Seal ring	
1.3	Pressure spring	
2	Chamber	A
2.1	Chamber with O-Ring	A
3	Barrier gas chamber	B
3.1	Barrier gas chamber with O-Rings	B
4	Lantern chamber	C
4.1	Lantern chamber with O-Ring	C
5	Lantern thin	E
5.1	Lantern wide	F
6	End ring	G
7	Flat seal	H
8*	Housing	
9*	Lid	
10*	O-Ring housing	

* On request

Recommended applications

- Oil and gas industry
- Refining technology
- Chemical and petrochemical industry
- Pulp and paper industry
- Metal production and processing
- Power plant technology
- Integral-gear compressors (one or multi-stage)
- Screw and chiller compressors
- Steam turbines
- Regulating devices
- Gases
- Fumes and exhaust, solids containing, flammable (ATEX), acid containing and toxic gases
- (Solids containing) steams/liquid mist
- Oil mist/penetrating oil
- Water

Dimensions in mm

d_{h6}	D^{H7}	d_1	A	B	C	E	F	G	H
20	80	22	10	21	16	11	17	5	1
25	85	27	10	21	16	11	17	5	1
30	90	32	10	21	16	11	17	5	1
35	95	37	10	21	16	11	17	5	1
40	100	42	10	21	16	11	17	5	1
45	105	47	10	21	16	11	17	5	1
50	110	52	10	21	16	11	17	5	1
55	115	57	10	21	16	11	17	5	1
60	120	62	10	21	16	11	17	5	1
65	125	67	10	21	16	11	17	5	1
70	130	72	10	21	16	11	17	5	1
75	135	77	10	21	16	11	17	5	1
80	140	82	10	21	16	11	17	5	1
85	145	87	10	21	16	11	17	5	1
90	150	92	10	21	16	11	17	5	1
95	155	97	10	21	16	11	17	5	1
100	160	102	10	21	16	11	17	5	1
105	165	107	10	21	16	11	17	5	1
110	170	112	10	21	16	11	17	5	1
115	175	117	10	21	16	11	17	5	1
120	190	122	12	27	19	15	20	8	2
130	200	132	12	27	19	15	20	8	2
140	210	142	12	27	19	15	20	8	2
150	220	152	12	27	19	15	20	8	2
160	230	162	14	31	21	15	20	8	2
170	240	172	14	31	21	15	20	8	2
180	250	182	14	31	21	15	20	8	2
190	260	192	14	31	21	15	20	8	2
200	270	202	14	31	21	15	20	8	2
210	280	212	14	31	21	15	20	8	2
220	290	222	14	31	21	15	20	8	2
230	300	232	14	31	21	15	20	8	2
240	310	242	14	31	21	15	20	8	2
250	320	252	14	31	21	15	20	8	2
260	330	262	14	31	21	15	20	8	2
270	340	272	14	31	21	15	20	8	2
280	350	282	14	31	21	15	20	8	2
290	360	292	14	31	21	15	20	8	2
300	370	302	14	31	21	15	20	8	2

Special sizes on request.

Espey WKA1100HP

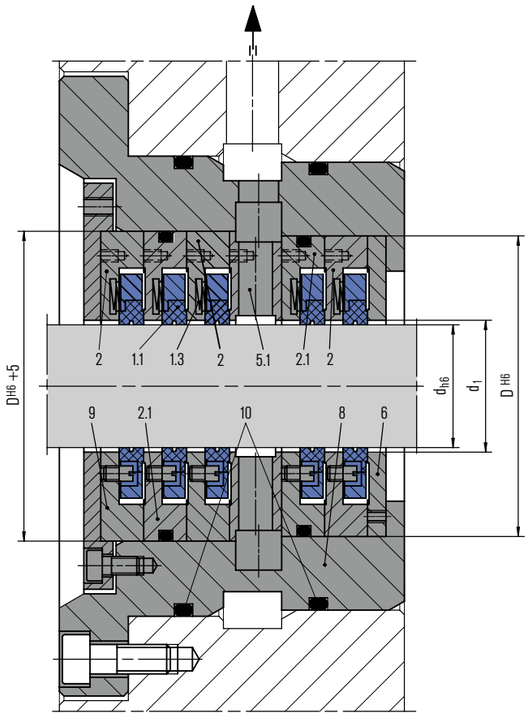

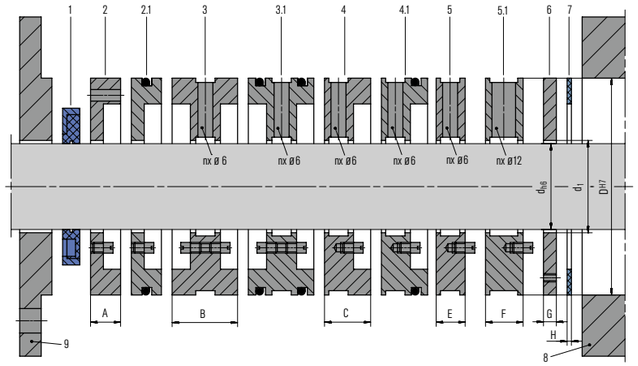

Features

- Chamber seal (modular design), optional with housing and lid
- Very small operation gap – low leakage
- Dry running
- Compensation of radial and axial shaft deflections
- No sealing components mounted on the shaft and hence no additional shaft vibrations
- Seal rings running contact-free – sliding faces and machine consume no additional power
- One-piece seal ring with titanium bandage
- Both side balanced seal ring inside chamber for short-term backpressure operation
- Seal ring axially spring-loaded – no swinging up at pressure-less machine operation

Advantages

- High reliability
- Maintainability
- Maintenance-free

Operating range (see note on page 1)

Shaft diameter: d = 20 ... 200 mm (0.79" ... 7.87")
Operating pressure: p = vacuum ... 250 bar (3,625 PSI) abs.
Operating temperature: t = –120 °C ... +225 °C (–184 °F ... +437 °F)
Sliding velocity: v_g = max. 240 m/s (787 ft/s)
Radial play: ±1.0 mm (±0.04")
Axial movement: theoretically unlimited
Recommended wear guard: > 58 HRC

Materials

Seal ring: Carbon with titanium bandage
Chamber and housing parts: 1.4021, 1.4571, Hastelloy®, Titanium, Inconel®, others
Secondardy seal (elastomer): Fluorocarbon rubber (Viton®), Nitrile-butadiene-rubber (Perbunan®), Perfluorocarbon rubber (Kalrez®)
Secondary seal (gasket): Statotherm®-HT/HD, KSiL C 4400

Standards and approvals

- Material approvals: FDA

Item	Description	Variable for width
1.1	Seal ring	
1.3	Pressure spring	
2	Chamber	A
2.1	Chamber with O-Ring	A
3	Barrier gas chamber	B
3.1	Barrier gas chamber with O-Rings	B
4	Lantern chamber	C
4.1	Lantern chamber with O-Ring	C
5	Lantern thin	E
5.1	Lantern wide	F
6	End ring	G
7	Flat seal	H
8*	Housing	
9*	Lid	
10*	O-Ring housing	

* On request

Recommended applications

- Oil and gas industry
- Refining technology
- Chemical and petrochemical industry
- Pulp and paper industry
- Metal production and processing
- Power plant technology
- Integral-gear compressors (one or multi-stage)
- Screw and chiller compressors
- Gases
- Fumes and exhaust, solids containing, flammable (ATEX), acid containing and toxic gases
- (Solids containing) steams/liquid mist
- Oil mist/penetrating oil
- Water

Dimensions in mm

d_{h6}	D^{H6}	d_1	A	E	G	H
20	85	22	11	12	5	1
25	90	27	11	12	5	1
30	95	32	11	12	5	1
35	100	37	11	12	5	1
40	105	42	11	12	5	1
45	110	47	11	12	5	1
50	115	52	11	12	5	1
55	120	57	11	12	5	1
60	125	62	11	12	5	1
65	130	67	11	12	5	1
70	135	72	11	12	5	1
75	140	77	11	12	5	1
80	145	82	11	12	5	1
85	150	87	11	12	5	1
90	155	92	11	12	5	1
95	160	97	11	12	5	1
100	165	102	11	12	5	1
105	170	107	11	12	5	1
110	175	112	11	12	5	1
115	180	117	11	12	5	1

Special sizes on request.

Espey WDB200

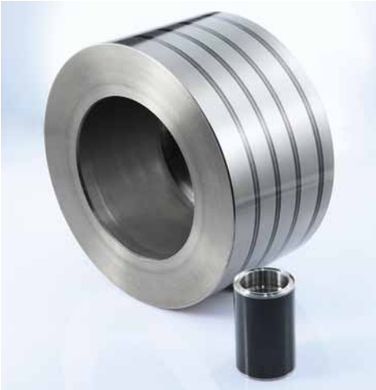

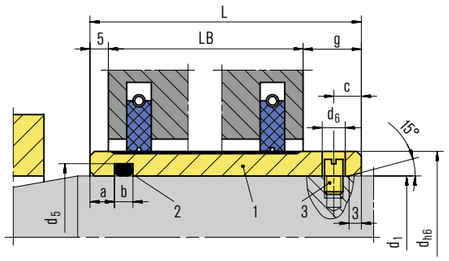

Features

- Torque transmission depending on application with set screw or as shrink fit
- Metallic coating (FMP 84) basically for applications without high oxidation
- Ceramic coating (EMP 98/FMP 130) basically for applications with high oxidation
- Design one- or two-piece

Operating range

FMP 84 (metallic coating)
General description: chromium carbide
Coating process: flame spray technique (no influence on material structure)
Shrink acceptability: very good
Shaft diameter: d = 45 ... 340 mm (1.77" ... 13.39")
Operating temperature: t = max. 1,000 °C (1,832 °F)
Peripheral velocity: vu = max. 240 m/s (787 ft/s)
Hardness: > 65 HRC

EMP 98 / FMP 130 (ceramic coating)
General description: chromium oxide (ceramic)
Coating process: flame spray technique (no influence on material structure)
Shrink acceptability: with restrictions
Shaft diameter: d = 45 ... 340 mm (1.77" ... 13.39")
Operating temperature: t = max. 600 °C (1,112 °F)
Peripheral velocity: vu = max. 150 m/s (492 ft/s)
Hardness: > 58 HRC

Advantages

- Easy installation by split design (2-piece version)
- High reliability
- Maintainability

Materials

1.4021-FMP, 1.4086, 1.4462-FMP, 1.4571-FMP, others

Item	Description
1	Shaft sleeve
2	O-Ring
3	Set screw

Standards and approvals

- DIN 42955

Product variants

Espey WDB212/4 with fit bore shaft sleeve/diameter shaft H6/h6 for low loaded seals e. g. in slow running fans, agitators or shaft sleeve Espey WDB215/4 with fit bore shaft sleeve/diameter shaft M5/h6 for high loaded seals e. g. in turbo compressors, turbines.

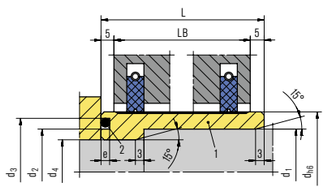

Espey WDB216/4 with fit bore shaft sleeve/diameter shaft according to operating conditions and customer specifications e. g. for high pressure turbo compressors and turbines.

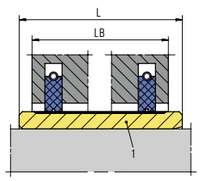

Dimensions in mm

d_{h6}	d_1*	d_2	d_3	d_4	d_5	d_6	a	b	c	e	f	g
45	35	37	42	25.5	38.5	6	5	3	8	1.5	20	15
50	40	42	47	30.5	43.5	6	5	3	8	1.5	20	15
60	50	52	57	40.5	53.5	6	5	3	8	1.5	20	15
70	55	60	67	45.5	60.4	6	5	4	8	2.4	20	15
80	65	70	77	55.5	70.4	6	5	4	8	2.4	20	15
90	75	80	87	65.5	80.4	6	5	4	8	2.4	20	15
100	85	89	97	75.5	91.3	6	7	4.5	8.5	2.8	20	17
110	90	99	107	75.5	96.3	7	7	4.5	8.5	2.8	20	17
120	100	109	117	85.5	106.3	7	7	4.5	8.5	2.8	20	17
130	110	119	127	95.5	116.3	7	7	4.5	8.5	2.8	20	17
140	120	129	137	105.5	126.3	7	7	4.5	8.5	2.8	20	17
150	130	138	146	115.5	136.3	7	7	4.5	8.5	2.8	20	17
160	140	148	156	125.5	146.3	9	7	4.5	9.5	2.8	20	19
170	150	158	166	135.5	156.3	9	7	4.5	9.5	2.8	20	19
180	160	168	176	145.5	166.3	9	7	4.5	9.5	2.8	20	19
190	170	178	186	155.5	176.3	9	7	4.5	9.5	2.8	20	19
200	180	188	196	165.5	186.3	9	7	4.5	9.5	2.8	20	19
220	195	206	215	175.5	202.2	11	8	5	11	3.2	25	22
240	215	226	235	195.5	222.2	11	8	5	11	3.2	25	22
260	235	246	255	215.5	242.2	11	8	5	11	3.2	25	22
280	255	266	275	235.5	262.2	11	8	5	11	3.2	25	22
300	275	286	295	255.5	282.2	11	8	5	11	3.2	30	22
320	295	306	315	275.5	302.2	11	8	5	11	3.2	30	22
340	315	326	335	295.5	322.2	11	8	5	11	3.2	30	22

Special sizes on request.
* Consider selection of fits

Seal supply systems

4

Depending on the design, application and mode of operation, supply systems are needed to flush, cool and pressurize mechanical seals and magnetic couplings and provide leakage compensation. EagleBurgmann supplies a complete range of solutions from a single source including design, production, commissioning and service. The portfolio includes a complete line of API compliant supply systems.

Quench systems
QFT1000 186
QFT2000 188
QFT3000 190
QFT6000 192

Thermosiphon systems
TS1000 194
TS2000 196
TS3000 198
TS3016 200
TS4000 202
TS5000 204
TS6000 206

Closed loop systems
SPO (Plan 53B) 208
SPO (Plan 53C) 209

Pressure booster systems
DRU2000 210

Barrier fluid systems
SPA 212

Components
DHE Pressure accumulator unit 214
DRE Pressure control unit 215
VTE Distribution unit 216

Refill units
SPN Automatic 218
SPN Manual 220

Heat exchangers
WDK 221
WED 222
WE 224
WEL1000 226
WEL2000 228

Leakage control systems
LSO50 (Plan 65) 230
LSO50 (Plan 75) 231
SP23 232

External flush systems
FLC200 234
Bestflow® 235

Pumps
SPU Circulations pumps 236
HPS Screw pumps 237

Cyclone separators, filters
ZY Cyclone separator 238
MAF203 Magnetic filter 240
MAF2001 Magnetic filter 241
MAA Magnetic separator 242

Instrumentation
SP23 Flowmeter 243
SP23 Manometer 244
SP23 Thermometer 245
SPI Measuring unit 246
SPL Level indicator 247
SPS Level switch 248
SPK Contact unit 249

Gas supply systems
GSS 250
SMS Seal management system 252
RoTechBooster™ 254

QFT1000

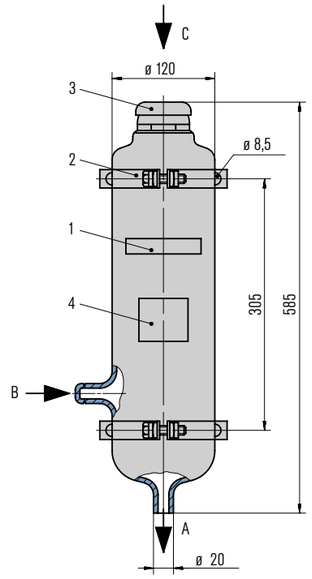

Features

Quench fluid supply systems are used to supply single or tandem mechanical seals. They act as a convenient fluid reservoir. The exchange of fluid takes place by the thermosiphon principle or by forced circulation, e. g. with a pumping screw. The QFT1000 is made of transparent polyethylene, complete with clips made of stainless steel. The QFT1000 is resistant to water, glycerine, glycols and methanol; not resistant to mineral oils and toluene.

Circulation in accordance with API 682/ ISO 21 049: Plan 51, Plan 52

Advantages

- Excellent value for money
- Transparent polyethylene: fluid level is read off directly on the quench fluid tank
- Resistant to a wide range of quench media
- Quickly and easily installed
- Combined filling and ventilation filter in the quench fluid tank for reliable operation

Functional description

Quench fluid systems are employed:
- to absorb leakage
- to monitor the leakage rate (e. g. through periodic reading of the level in the tank)
- to lubricate and to cool the outboard mechanical seal in a tandem arrangement
- to prevent icing
- to protect against dry running
- to stabilize the lubricating film
- to exclude air from the media in order to prevent a reaction with oxygen in the air

Item	Description
1	Storage tank (capacity 4 l)
2	Clip
3	Inlet filter with vented cap
4	Name plate

Connections

A	to the mechanical seal
B	from the mechanical seal (optional)
C	filling

Recommended applications

- Chemical industry
- Food and beverage industry
- Pharmaceutical industry

Product variants

QFT1000/A004-00
Version with external level indicator.

QFT1000/M001-00
Version with threaded coupling for connecting a tube dia. 10 mm

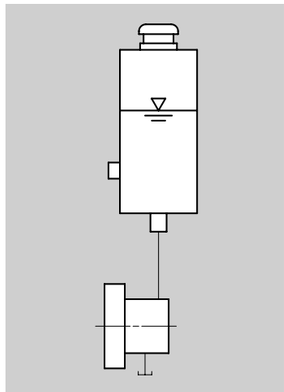

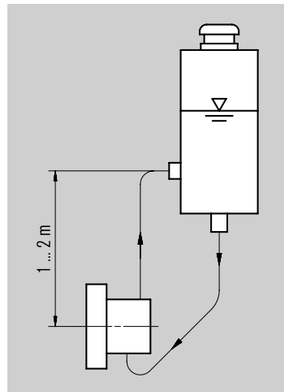

Install the quench fluid tank approx. 1 ... 2 m (3.3 ... 6.6 ft) above the mechanical seal. Install connection pipes to the mechanical seal with low flow resistance. Pipes must vent automatically in the direction of the tank. It is imperative that air pockets are prevented. The minimum filling level must always be above the connection socket at the side (in the case of the thermosiphon principle). Quench fluid systems can be operated in two different modes.

Dead-end quench (Plan 51):
Quench fluid from an elevated tank. The characteristic feature of this principle is that no heat is dissipated by the system.

Circulation (Plan 52):
Quench fluid from an elevated tank; external tank, pressureless; thermosiphon or forced circulation. In this case heat is dissipated by the circulation. Cooling capacity by convection is minimal, however.

Designation	QFT1000-00	QFT1000/A004-00	QFT1000/M001-00
Volume (liters)	4	4	4
Allowable pressure	Pressureless	Pressureless	Pressureless
Allowable temperature	–30 °C ... +70 °C (–22 °F ... +158 °F)	–30 °C ... +70 °C (–22 °F ... +158 °F)	–30 °C ... +70 °C (–22 °F ... +158 °F)
Material, tank			
Polyethylene	■	■	■
Material, filling filter			
Polyamide	■	■	■
Connection			
Hose	■	■	
Fitting for tube, 10 mm			■

Other versions on request.

QFT2000

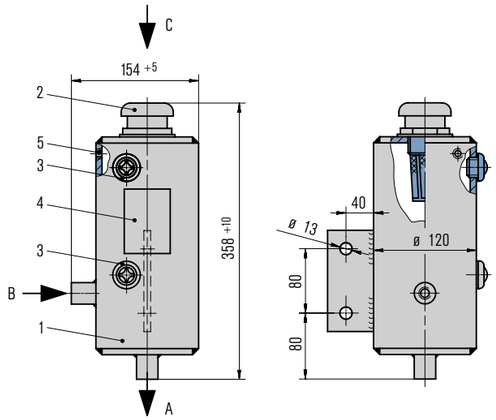

Features

Quench fluid supply systems are used to supply single or tandem mechanical seals. They act as a convenient fluid reservoir. The exchange of fluid takes place by the thermosiphon principle or by forced circulation, e. g. with a pumping screw. The QFT2000 stainless steel tank is equipped with sight-glasses for monitoring the MIN/MAX level and can be fastened with a lug fixture. The leakage overflow can be selectively discharged.

Circulation in accordance with API 682/ ISO 21 049: Plan 51, Plan 52

Functional description

Quench fluid systems are employed:
- to absorb leakage
- to monitor the leakage rate (e. g. through periodic reading of the level in the tank)
- to lubricate and to cool the outboard mechanical seal in a tandem arrangement
- to prevent icing
- to protect against dry running
- to stabilize the lubricating film
- to exclude air from the media in order to prevent a reaction with oxygen in the air

Advantages

- Available in a range of different material combinations: suitable for a wide range of demanding operating conditions
- Design for medium temperatures of up to +200 °C (+392 °F)
- Tank made of 1.4571: high resistance to corrosive media
- Integrated overflow for selective discharge of leakage
- Instead of the sight-glass it is possible to use a level switch to monitor the fluid volume
- Combined filling and ventilation filter in the quench fluid tank for reliable operation

Item	Description
1	Storage tank (capacity 3 l)
2	Inlet filter with vented cap
3	Sight-glass or level switch
4	Name plate
5	Overflow G1/8"

Connections

A	to the mechanical seal
B	from the mechanical seal
C	filling

Recommended applications

- Chemical industry
- Food and beverage industry
- Pharmaceutical industry

Product variant

Instead of the inspection glass, a level switch can be used for monitoring the fluid volume:
MIN level: SPS2000/A051-00
MAX level: SPS2000/A052-00
MIN/MAX level: SPS2000/A053-00

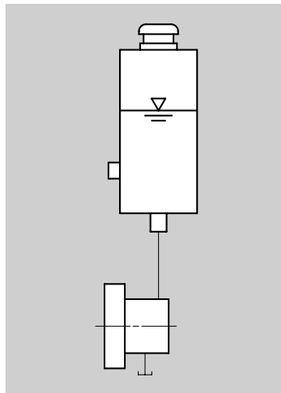

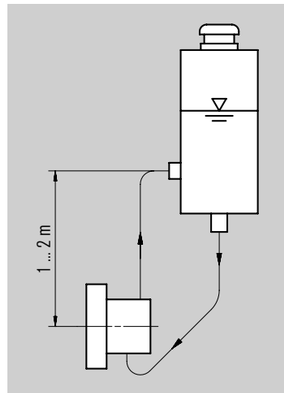

Install the quench fluid tank approx. 1 ... 2 m (3.3 ... 6.6 ft) above the mechanical seal. Install connection pipes to the mechanical seal with low flow resistance. Pipes must vent automatically in the direction of the tank. It is imperative that air pockets are prevented. The minimum filling level must always be above the connection socket at the side (in the case of the thermosiphon principle). Quench fluid systems can be operated in two different modes.

Dead-end quench (Plan 51):
Quench fluid from an elevated tank. The characteristic feature of this principle is that no heat is dissipated by the system.

Circulation (Plan 52):
Quench fluid from an elevated tank; external tank, pressureless; thermosiphon or forced circulation. In this case heat is dissipated by the circulation. Cooling capacity by convection is minimal, however.

Designation	QFT2000-00	QFT2000/A001	QFT2000/A002	QFT2000/A500	QFT2000/A501	QFT2000/A502
Volume (liters)	3	3	3	3	3	3
Allowable pressure	Pressureless	Pressureless	Pressureless	Pressureless	Pressureless	Pressureless
Allowable temperature	–30 °C ... +70 °C (–22 °F ... +158 °F)	–30 °C ... +120 °C (–22 °F ... +248 °F)	–30 °C ... +200 °C (–22 °F ... +392 °F)	–30 °C ... +70 °C (–22 °F ... +158 °F)	–30 °C ... +120 °C (–22 °F ... +248 °F)	–30 °C ... +200 °C (–22 °F ... +392 °F)
Material, tank						
1.4571	■	■	■	■	■	■
Material, filling filter						
Polyamide	■	■		■	■	
1.4571			■			■
Material, inspection glass						
Acrylic/NBR	■			■		
Borosilicate/PTFE		■	■		■	■
Connection						
G1/2"	■	■	■			
1/2 NPT				■	■	■

Other versions on request.

QFT3000

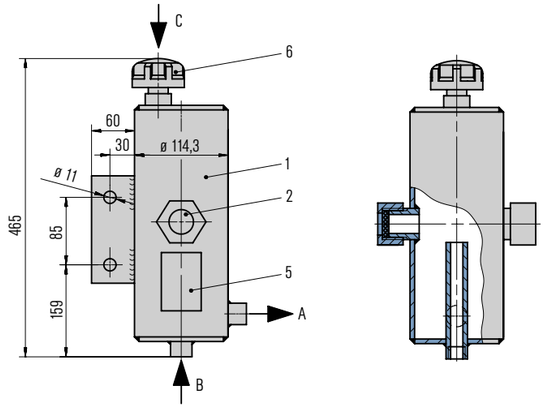

Features

Quench fluid supply systems are used to supply single or tandem mechanical seals. They act as a convenient fluid reservoir. The exchange of fluid takes place by the thermosiphon principle or by forced circulation, e. g. with a pumping screw. The QFT3000 stainless steel tank is equipped with a sight-glass for monitoring the MIN filling level and can be fastened with a lug fixture.

Circulation in accordance with API 682/ ISO 21 049: Plan 51, Plan 52

Functional description

Quench fluid systems are employed:
- to absorb leakage
- to monitor the leakage rate (e. g. through periodic reading of the level in the tank)
- to lubricate and to cool the outboard mechanical seal in a tandem arrangement
- to prevent icing
- to protect against dry running
- to stabilize the lubricating film
- to exclude air from the media in order to prevent a reaction with oxygen in the air

Advantages

- Two sight-glasses fitted on opposite sides enable optimum reading of the fluid level and condition of the medium
- Tank made of 1.4571: high resistance to corrosive media
- Return flow via integrated rising pipe for selective current control
- Combined filling and ventilation filter in the quench fluid tank for reliable operation

Item	Description
1	Storage tank (capacity 3 l)
2	Sight-glass
5	Name plate
6	Filter and breather

Connections

A	to the mechanical seal
B	from the mechanical seal
C	filling

Recommended applications

- Chemical industry
- Food and beverage industry
- Pharmaceutical industry

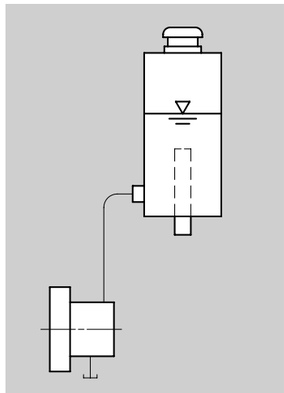

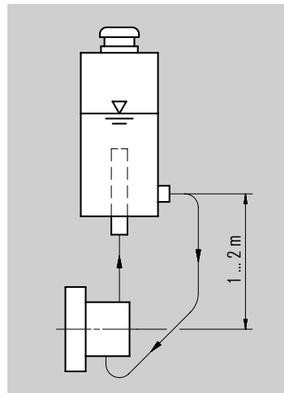

Install the quench fluid tank approx. 1 ... 2 m (3.3 ... 6.6 ft) above the mechanical seal. Install connection pipes to the mechanical seal with low flow resistance. Pipes must vent automatically in the direction of the tank. It is imperative that air pockets are prevented. The minimum filling level must always be above the connection socket at the side (in the case of the thermosiphon principle). Quench fluid systems can be operated in two different modes.

Dead-end quench (Plan 51):
Quench fluid from an elevated tank. The characteristic feature of this principle is that no heat is dissipated by the system.

Circulation (Plan 52):
Quench fluid from an elevated tank; external tank, pressureless; thermosiphon or forced circulation. In this case heat is dissipated by the circulation. Cooling capacity by convection is minimal, however.

Designation	QFT3000/M001
Volume (liters)	3
Allowable pressure	Pressureless
Allowable temperature	−40 °C ... +120 °C (−40 °F ... +248 °F)
Material, tank	
1.4571	■
Material, filling filter	
Glass-fibre-reinforced polyamide	■
Material, inspection glass	
Borosilicate/PTFE	■
Connection	
G1/2"	■

Other versions on request.

QFT6000

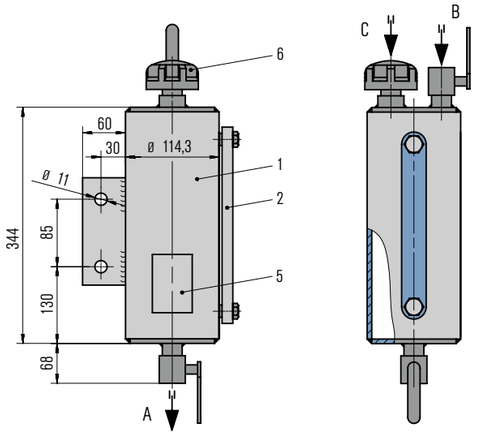

Features

Quench fluid supply systems are used to supply single mechanical seals. They act as a convenient fluid reservoir. The QFT6000 stainless steel tank is equipped with a sight-glass for monitoring the MIN/MAX filling level and can be fastened with a lug fixture.

Circulation in accordance with API 682/ ISO 21 049: Plan 51

Functional description

Quench fluid systems (Plan 51) are employed:

- to absorb leakage
- to monitor the leakage rate (e. g. through periodic reading of the level in the tank)
- to prevent icing
- to protect against dry running
- to stabilize the lubricating film
- to exclude air from the media in order to prevent a reaction with oxygen in the air

Advantages

- Sight-glass for MIN/MAX monitoring has a large indicator area
- Filling is possible via a filling filter or a separate pipe connection
- Combined filling and ventilation filter in the quench fluid tank for reliable operation
- Tank made of 1.4571: high resistance to corrosive media

Item	Description
1	Storage tank (capacity 3 l)
2	Sight-glass
5	Name plate
6	Filter and breather

Connections

A	to the mechanical seal
B	filling via pipe connection
C	filling via filling filter

Recommended applications

- Refining technology
- Oil and gas industry
- Chemical industry
- Petrochemical industry

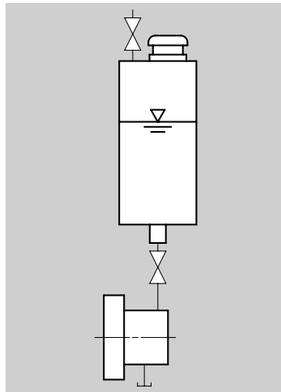

Install the quench fluid tank above the mechanical seal. Install connection pipes to the mechanical seal with low flow resistance. Pipes must vent automatically in the direction of the tank. It is imperative that air pockets are prevented.

The QFT6000 quench fluid system can be operated in accordance with Plan 51 (dead-end quench). Quench fluid from elevated tank. The characteristic feature of this principle is that no heat is dissipated by the system.

Designation	QFT6000/M001-D0
Volume (liters)	3
Allowable pressure	Pressureless
Allowable temperature	–20 °C ... +80 °C (–4 °F ... +176 °F)
Material, tank	
1.4571	■
Material, filling filter	
Glass-fibre-reinforced polyamide	■
Material, inspection glass	
Glass/FKM	■

TS1000

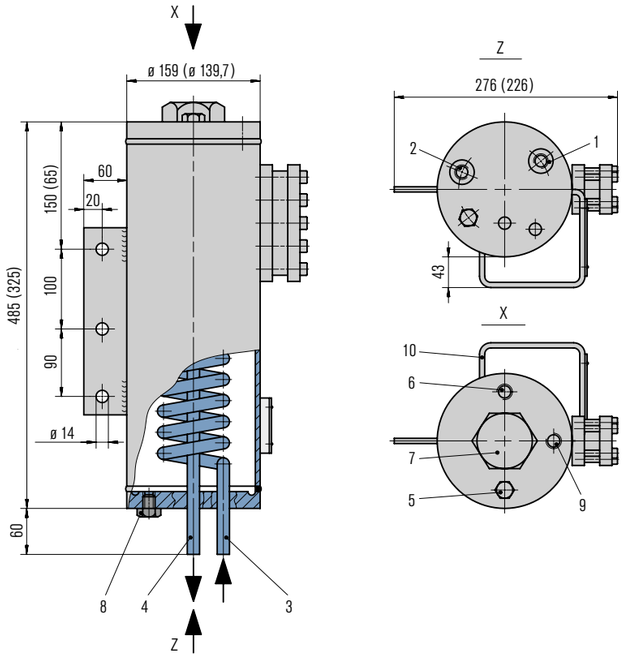

Features

With the EagleBurgmann TS1016 thermosiphon system it is possible to supply buffer/barrier fluid to double and tandem mechanical seals for a broad range of applications. The TS1016 thermosiphon vessel is available in 2 standard sizes with flat ends, sight-glasses for level monitoring and with or without cooling coil. TS vessels are equipped as standard with all the necessary system connections and brackets. The modular system allows the TS1016 vessels to be combined with a wide range of system components such as, level switch, circulation pump, hand refill pump, thermometer, base frame, etc.

Circulation in accordance with API 682/ ISO 21 049: Plan 52, Plan 53A

Advantages

- Available in 2 standard sizes
- Modular system: combination with a wide range of system components possible
- Vessel made of 1.4571 stainless steel/ borosilicate sight-glasses: suitable for universal applications
- All system connections on the face sides
- Available with or without cooling coil
- Low space requirements because of compact design

Functional description

The TS system performs all the basic functions of a buffer/barrier system for the operation of double seals:
- to pressurize the buffer chamber
- leakage compensation
- buffer/barrier fluid is circulated by thermosiphon effect or forced circulation system
- to cool the seal
- to selectively absorb product leakage and prevent dry running (tandem arrangement)

Use compressed air or nitrogen for pressurization.

Standards and approvals

- PED 97/23 EC (Design and production in accordance with EU Pressure Equipment Directive)

Recommended applications

- Chemical industry
- Petrochemical industry
- Pulp and paper industry
- Food and beverage industry
- Water and waste water technology

Item	Description
1	Buffer/barrier fluid IN (G1/2")
2	Buffer/barrier fluid OUT (G1/2")
3	Cooling water IN (pipe 12 x 1.5 mm)
4	Cooling water OUT (pipe 12 x 1.5 mm)
5	Filling connection with cap (G1/2")
6	Pressure gas connection (1/4 NPT)
7	Connection for level switch (G2")
8	Connection for refill unit (G1/8")
9	Connection for pressure gauge (1/4 NPT)
10	Bracket for refill unit

Dimensions for TS1016/A007.
Values in brackets: TS1016/A003

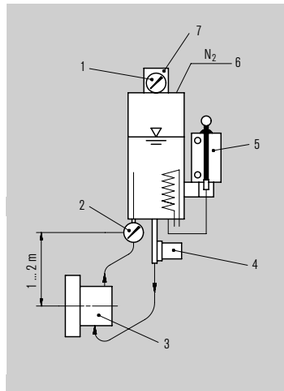

Operating and installation diagram for a TS1000 system.

The TS vessel must always be installed higher than the mechanical seal. The buffer/barrier fluid flows via the rising pipe into the vessel and is cooled. Particularly with natural circulation, the fluid level must always be higher than the rising pipe to maintain the circulation and to provide the specified cooling capacity. Connection pipes to the seal should be designed with as little resistance as possible.

1 Pressure gauge
2 Thermometer
3 Mechanical seal
4 SPU
5 SPN
6 From PCV, we recommend using a reverse controlled pressure control valve (PCV)
7 Level switch

Product variants

TS1016/A003 **TS1016/A007**

Designation	TS1016/A003	TS1016/A009	TS1016/A007	TS1016/A008
Pressure Equipment Directive	PED	PED	PED	PED
Integrated cooling coil	■		■	
Volume, vessel (liters)	4	4	8	8
Volume, tube (liters)	0.2		0.2	
Allowable pressure[1)]	16 bar (232 PSI)	16 bar (232 PSI)	16 bar (232 PSI)	16 bar (232 PSI)
Allowable temperature[1)]	−60 °C ... +160 °C (−76 °F ... +320°F)	−60 °C ... +160 °C (−76 °F ... +320°F)	−60 °C ... +200 °C (−76 °F ... +392 °F)	−60 °C ... +200 °C (−76 °F ... +392 °F)
Working volume, MAX-MIN (liters)	1.2	1.2	1.3	1.3
Cooling capacity – without cooling water (kW)[3)]	0.2	0.2	0.3	0.3
Cooling capacity – natural circulation (kW)[2)]	1		1.2	
Cooling capacity – forced circulation (kW)[2)]	2		2.5	
Required cooling water quantity (m^3/h)	0.25		0.3	
Metal parts	1.4571	1.4571	1.4571	1.4571
Sight-glass	Sight-glass, round Borosilicate	Sight-glass, round Borosilicate	Reflex sight-glass Borosilicate	Reflex sight-glass Borosilicate
Seal	PTFE	PTFE	PTFE	PTFE

Other versions on request.
1) Design data, permissible working values depend on the actual conditions of service
2) Guidelines with buffer/barrier fluid water 60 °C – cooling water 20 °C
3) Guidelines with buffer/barrier fluid water 60 °C – ambient temperature 20 °C
(valid for thermosiphon systems without cooling water with natural circulation resp. forced circulation)

TS2000

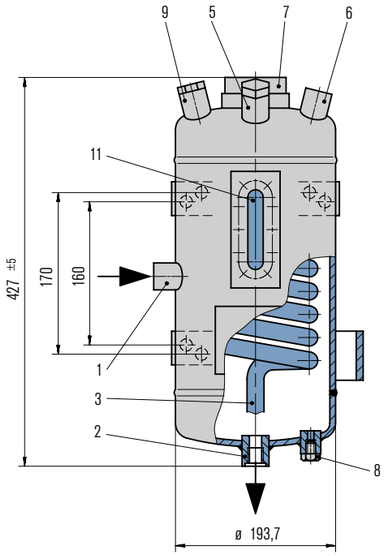

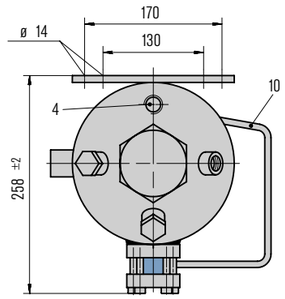

Features

With the EagleBurgmann TS2000 thermosiphon system it is possible to supply buffer/barrier fluid to double and tandem mechanical seals for a broad range of applications. The range is available in 2 different pressure levels with dished heads, sight-glass for level monitoring and with or without cooling coil. TS vessels are equipped as standard with all the necessary system connections and brackets. The modular system allows the TS2000 vessels to be combined with a wide range of system components such as, level switch, circulation pump, hand refill pump, thermometer, base frame, etc.

Circulation in accordance with API 682/ ISO 21 049: Plan 52, Plan 53A

Advantages

- Suitable for a wide range of demanding operating conditions: TS2000 up to 30 bar/200 °C; TS2063 up to 63 bar/200 °C
- Modular system: combination with a wide range of system components possible
- Vessel made of 1.4571 stainless steel/ borosilicate sight-glasses: suitable for universal applications
- Available with or without cooling coil
- Cooling water connections at top (OUT) and bottom (IN): optimum draining and venting
- Sockets with recessed gasket: no contamination of the circuit by thread sealant

Functional description

The TS system performs all the basic functions of a buffer/barrier system for the operation of double seals:

- to pressurize the buffer/barrier chamber
- leakage compensation
- buffer/barrier fluid is circulated by thermosiphon effect or external circulation system
- to cool the seal
- to selectively absorb product leakage and prevent dry running (tandem arrangement)

Use compressed air or nitrogen for pressurization.

Standards and approvals

- PED 97/23 EC (Design and production in accordance with EU Pressure Equipment Directive)
- ASME VIII, Div. 1 (Design, calculation and production)

Recommended applications

- Chemical industry
- Petrochemical industry
- Oil and gas industry
- Refining technology

Item	Description
1	Buffer/barrier fluid IN (G1/2")
2	Buffer/barrier fluid OUT (G1/2")
3	Cooling water IN (G1/2")
4	Cooling water OUT (G1/2")
5	Filling connection with plug (G1/2")
6	Pressure gas connection (G1/2")
7	Connection for level switch or level indicator (G2")
8	Connection for refill unit (G1/8")
9	Universal connection (G1/2") for safety valve, flare, etc.
10	Bracket for refill unit
11	Sight-glass

Product variants

TS4030: A gap-free TS vessel, with a pickled and passivated surface

TS5000: TS vessel can be dismantled

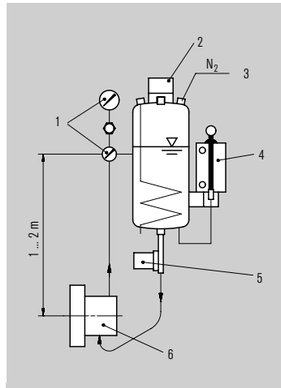

Operating and installation diagram for a TS2000 system.

The TS vessel must always be installed higher than the mechanical seal. The buffer/barrier fluid flows via the return pipe into the vessel and is cooled. The exchange of fluid takes place by the thermosiphon principle or by forced circulation, e. g. with a pumping screw. Connection pipes to the seal should be designed with as little resistance as possible.

1 SPI Measuring unit
2 SPS Level switch
3 From PCV, we recommend using a reverse controlled pressure control valve (PCV)
4 SPN
5 SPU
6 Mechanical seal

Designation	TS2000-00	TS2001-00	TS2063/A002	TS2063/A001	TS2000/A100	TS2001/A100	TS2063/A102	TS2063/A101
Pressure Equipment Directive	PED	PED	PED	PED	ASME	ASME	ASME	ASME
Integrated cooling coil	■		■		■		■	
Volume, vessel (liters)	9	9	9	9	9	9	9	9
Volume, tube (liters)	0.5		0.5		0.5		0.5	
Allowable pressure[1]	30 bar (435 PSI)	30 bar (435 PSI)	63 bar (914 PSI)	63 bar (914 PSI)	20 bar (290 PSI)	20 bar (290 PSI)	52 bar (754 PSI)	52 bar (754 PSI)
Allowable temperature[1]	−60 °C ... +200 °C (−76 °F ... +392 °F)	−60 °C ... +200 °C (−76 °F ... +392 °F)	−60 °C ... +200 °C (−76 °F ... +392 °F)	−60 °C ... +200 °C (−76 °F ... +392 °F)	−29 °C ... +150 °C (−20 °F ... +302 °F)	−29 °C ... +150 °C (−20 °F ... +302 °F)	−29 °C ... +200 °C (−20 °F ... +392 °F)	−29 °C ... +200 °C (−20 °F ... +392 °F)
Working volume, MAX-MIN (liters)	1.8	1.8	1.8	1.8	1.8	1.8	1.8	1.8
Cooling capacity – without cooling water (kW)[3]	0.5	0.5	0.5	0.5	0.5	0.5	0.5	0.5
Cooling capacity – natural circulation (kW)[2]	1.5		1.5		1.5		1.5	
Cooling capacity – forced circulation (kW)[2]	4		4		4		4	
Required cooling water quantity (m^3/h)	0.4		0.4		0.4		0.4	
Metal parts	1.4571	1.4571	1.4571	1.4571	1.4571	1.4571	1.4571	1.4571
Sight-glass	Reflex sight-glass, Borosilicate	Reflex sight-glass, Borosilicate	Reflex sight-glass, Borosilicate	Reflex sight-glass, Borosilicate	Reflex sight-glass, Borosilicate	Reflex sight-glass, Borosilicate	Reflex sight-glass, Borosilicate	Reflex sight-glass, Borosilicate
Seal	PTFE	PTFE	PTFE	PTFE	PTFE	PTFE	PTFE	PTFE
Net weight (approx.)	15.5 kg (34 lb)	12.5 kg (28 lb)	28.5 kg (63 lb)	26 kg (57 lb)	15.5 kg (34 lb)	12.5 kg (28 lb)	28.5 kg (63 lb)	26 kg (57 lb)

Other versions on request.
1) Design data, permissible working values depend on the actual conditions of service
2) Guidelines with buffer/barrier fluid water 60 °C – cooling water 20 °C
3) Guidelines with buffer/barrier fluid water 60 °C – ambient temperature 20 °C
(valid for thermosiphon systems without cooling water with natural circulation resp. forced circulation)

TS3000

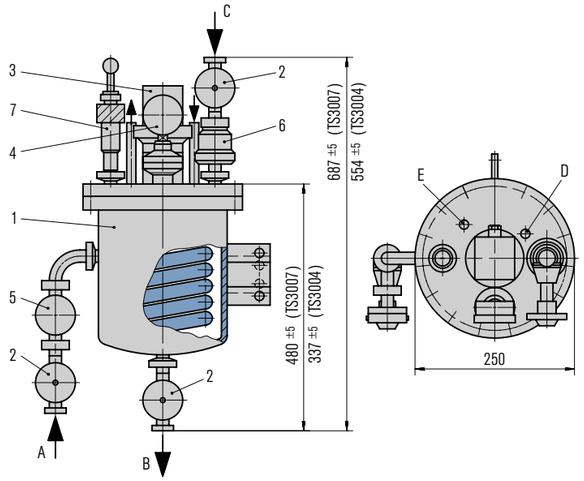

Features

Thermosiphon systems of the TS3000 range designed specifically for the operation and supply of mechanical seals in sterile processes. The TS3000 thermosiphon vessel is available in two standard sizes, designed for dismantling, with cooling coil. The modular system allows the TS3000 vessels to be combined with a wide range of system components.

Circulation in accordance with API 682/ ISO 21 049: Plan 52, Plan 53A

Advantages

- Can be fully sterilized: TS3000 thermosiphon system, including all components and pipe couplings
- Surfaces are electropolished on all sides: effective cleaning and reduction of bacteria growth
- Vessel can be dismantled: the joint is sealed at the inner diameter by an O-Ring without any gaps
- FDA-conform materials, therefore suitable for hygienic applications

Functional description

The TS system performs all the basic functions of a buffer/barrier system for the operation of double seals:
- to pressurize the buffer chamber
- leakage compensation
- buffer/barrier fluid is circulated by thermosiphon effects or forced circulation system
- to cool the seal
- to selectively absorb product leakage and prevent dry running (tandem arrangement)

In addition to performing the basic functions of a buffer/barrier system, the TS3000 system can also be used to make condensate, provided the TS system is connected up to a steam pipe.

Standards and approvals

- PED 97/23 EC (Design and production in accordance with EU Pressure Equipment Directive)

Item	Description
1	TS vessel with cooling coil
2	Shut-off valve
3	Level switch
4	Pressure gauge (membrane transducer)
5	Thermometer
6	Check valve
7	Safety valve (set pressure 8 bar)

Recommended applications

- Food and beverage industry
- Pharmaceutical industry

Notes

Sterilization:
CIP and SIP is possible.
Making condensate:
At the end of the sterilization cycle, valve 2.4 is closed, valve 2.3 is fully opened and the cooling water supply is switched on again – condensate will be made.
The level switch (3) responds when the TS vessel is full. The agitator can be startet up again.

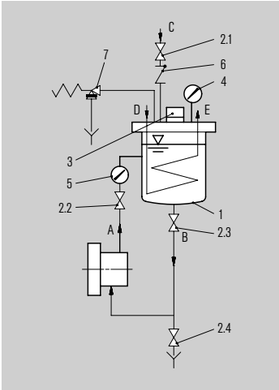

Operating and installation diagram for a TS3000 system

The TS vessel must always be installed higher than the mechanical seal. The buffer/barrier fluid flows via the return pipe into the vessel and is cooled. The exchange of fluid takes place by the thermosiphon principle or by forced circulation, e. g. with a pumping screw. Connection pipes to the seal should be designed with as little resistance as possible.

Designation	TS3004	TS3007
Pressure Equipment Directive	PED	PED
Integrated cooling coil	■	■
Volume, vessel (liters)	3.5	6.7
Volume, tube (liters)	0.2	0.5
Allowable pressure[1)]	8 bar (116 PSI)	8 bar (116 PSI)
Allowable temperature[1)]	–10 °C ... +140 °C (14 °F ... 284 °F)	–10 °C ... +140 °C (14 °F ... 284 °F)
Cooling capacity – natural circulation (kW)[2)]	1	2
Cooling capacity – forced circulation (kW)[2)]	2	4
Metal parts	1.4571	1.4571
Seal	EPDM	EPDM

[1)] Design data, permissible working values depend on the actual conditions of service
[2)] Guidelines with buffer/barrier fluid water 60 °C – cooling water 20 °C

TS3016

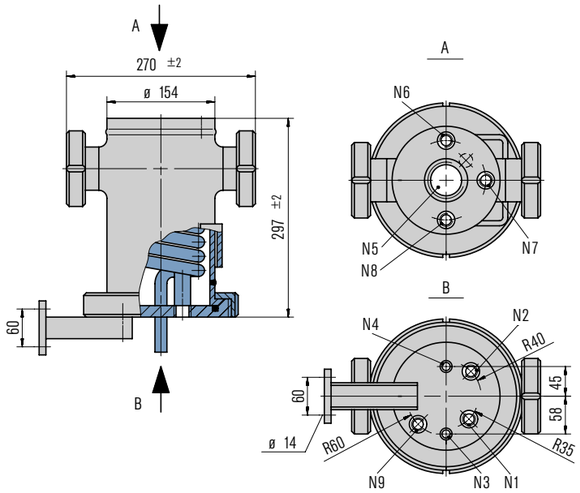

Features

The EagleBurgmann TS3016 thermosiphon system presents a simple and quick way to clean the vessel interior. For this purpose it is designed for easy dismantling.
A quick-release coupling should therefore be used to connect the pressure gas to the vessel. The modular system allows the TS3016 vessels to be combined with a wide range of system components.

Circulation in accordance with API 682/ ISO 21 049: Plan 52, Plan 53A

Advantages

- Vessel can be dismantled: for optimum and simple cleaning of the vessel interior
- Innovative design: Vessel is designed for quick and simple dismantling
- Two sight-glasses fitted on opposite sides enable optimum reading of the fluid level
- Piping system and seal can be flushed without dismantling
- Modular system: combination with a wide range of system components possible

Functional description

The TS system performs all the basic functions of a buffer/barrier system for the operation of double seals:
- to pressurize the buffer/barrier chamber
- leakage compensation
- buffer/barrier fluid is circulated by thermosiphon effect or forced circulation system
- to cool the seal
- to selectively absorb product leakage and prevent dry running (tandem arrangement)

Use compressed air or nitrogen for pressurization.

Standards and approvals

- PED 97/23 EC (Design and production in accordance with EU Pressure Equipment Directive)

Item	Description
N1	Buffer/barrier fluid IN (G1/2")
N2	Buffer/barrier fluid OUT (G1/2")
N3	Cooling water IN, pipe 15 x 1.5 mm
N4	Cooling water OUT, pipe 15 x 1.5 mm
N5	Level switch (G2")
N6	Auxiliary components (G1/2")
N7	Auxiliary components (G1/2")
N8	Filling connection (G1/2")
N9	Drain (G1/2")

Recommended applications

- Food and beverage industry
- Pharmaceutical industry
- Chemical industry

Notes

Cleaning:
To clean the inside of the vessel you simply have to open the union nut, disconnect the gas supply and level switch, and lift the vessel case.
There is no need to dismantle the seal and cooler connections or the lase.

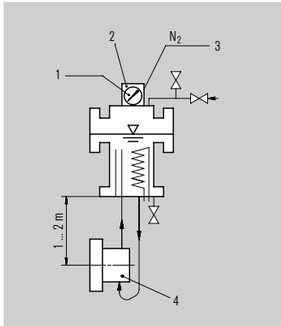

Operating and installation diagram for a TS3016 system

The TS vessel must always be installed higher than the mechanical seal. The buffer/barrier fluid flows via the rising pipe into the vessel and is cooled. Particularly with natural circulation, the fluid level must always be higher than the rising pipe to maintain the circulation and to provide the specified cooling capacity. Connection pipes to the seal should be designed with as little resistance as possible.

1 Pressure gauge
2 SPS Level switch
3 From PCV, we recommend using a reverse controlled pressure control valve (PCV)
4 Mechanical seal

Designation	TS3016
Pressure Equipment Directive	PED
Integrated cooling coil	■
Volume, vessel (liters)	4
Volume, tube (liters)	0.4
Allowable pressure[1]	16 bar (232 PSI)
Allowable temperature[1]	150 °C (302 °F)
Working volume, MAX-MIN (liters)	1.1
Cooling capacity – natural circulation (kW)[2]	1.0
Cooling capacity – forced circulation (kW)[2]	2.0
Metal parts	1.4571
Sight-glass	Sight-glass, round Borosilicate
Seal	PTFE
Additional welding material	1.4576/1.4430
Net weight (approx.)	12 kg (26.5 lb)

[1] Design data, permissible working values depend on the actual conditions of service
[2] Guidelines with buffer/barrier fluid water 60 °C – cooling water 20 °C

TS4000

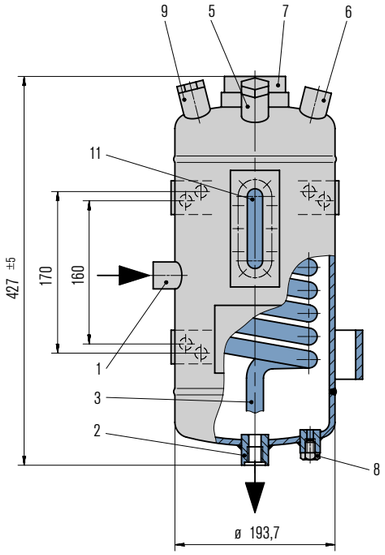

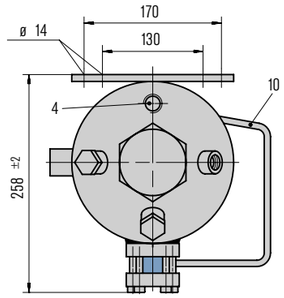

Features

With the EagleBurgmann TS4000 thermosiphon system it is possible to supply buffer/barrier fluid to double and tandem mechanical seals for a broad range of applications. The range is available in completely gap-free design with dished heads, sight-glass for level monitoring and with cooling coil. TS vessels are equipped as standard with all the necessary system connections and brackets. The modular system allows the TS4000 vessels to be combined with a wide range of system components such as, level switch, circulation pump, hand refill pump, thermometer, etc.

Circulation in accordance with API 682/ ISO 21 049: Plan 52, Plan 53A

Advantages

- Gap-free design; pickled and passivated surface inside and outside
- Suitable for a wide range of demanding operating conditions: TS4030 up to 30 bar/200 °C
- Cooling water connections at top (OUT) and bottom (IN): optimum draining and venting
- Sockets with recessed gasket: no contamination of the circuit by thread sealant
- Robust design with weld-pad type sight-glass for optimum visual level monitoring
- Modular system: combination with a wide range of system components possible

Functional description

The TS system performs all the basic functions of a buffer/barrier system for the operation of double seals:

- to pressurize the buffer/barrier chamber
- leakage compensation
- buffer/barrier fluid is circulated by thermosiphon effect or forced circulation system
- to cool the seal
- to selectively absorb product leakage and prevent dry running (tandem arrangement)

Use compressed air or nitrogen for pressurization.

Standards and approvals

- PED 97/23 EC (Design and production in accordance with EU Pressure Equipment Directive)

Recommended applications

- Chemical industry
- Pharmaceutical industry
- Food and beverage industry
- Refining technology
- Oil and gas industry

Item	Description
1	Buffer/barrier fluid IN (G1/2")
2	Buffer/barrier fluid OUT (G1/2")
3	Cooling water IN (G1/2")
4	Cooling water OUT (G1/2")
5	Filling connection with plug (G1/2")
6	Pressure gas connection (G1/2")
7	Connection for level switch or level indicator (G2")
8	Connection for refill unit (G1/8")
9	Universal connection (G1/2") for safety valve, flare, etc.
10	Bracket for refill unit
11	Sight-glass

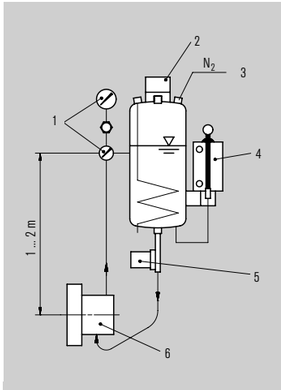

Operating and installation diagram for a TS4000 system.

The TS vessel must always be installed higher than the mechanical seal. The buffer/barrier fluid flows via the return pipe into the vessel and is cooled. The exchange of fluid takes place by the thermosiphon principle or by forced circulation, e. g. with a pumping screw. Connection pipes to the seal should be designed with as little resistance as possible.

1 SPI Measuring unit
2 SPS Level switch
3 From PCV, we recommend using a reverse controlled pressure control valve (PCV)
4 SPN
5 SPU
6 Mechanical seal

Designation	TS4030/A002
Pressure Equipment Directive	PED
Integrated cooling coil	■
Volume, vessel (liters)	9
Volume, tube (liters)	0.5
Allowable pressure[1)]	30 bar (435 PSI)
Allowable temperature[1)]	–60 °C ... +200 °C (–76 °F ... +392 °F)
Working volume, MAX-MIN (liters)	1.8
Cooling capacity – without cooling water (kW)[3)]	0.5
Cooling capacity – natural circulation (kW)[2)]	1.5
Cooling capacity – forced circulation (kW)[2)]	4
Required cooling water quantity (m^3/h)	0.4
Metal parts	1.4571
Sight-glass	Reflex sight-glass Borosilicate
Seal	PTFE

Other versions on request.
1) Design data, permissible working values depend on the actual conditions of service
2) Guidelines with buffer/barrier fluid water 60 °C – cooling water 20 °C
3) Guidelines with buffer/barrier fluid water 60 °C – ambient temperature 20 °C
(valid for thermosiphon systems without cooling water with natural circulation resp. forced circulation)

TS5000

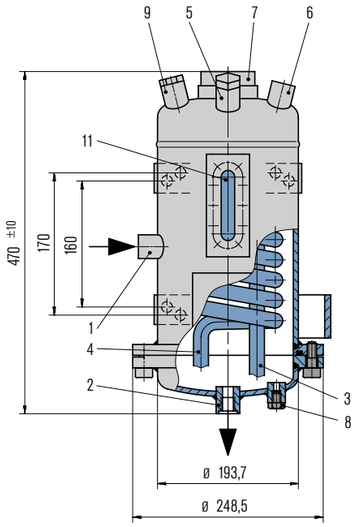

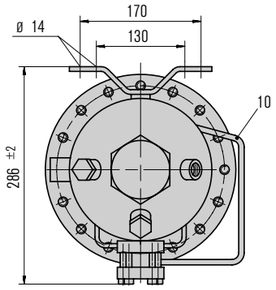

Features

With the EagleBurgmann TS5000 thermosiphon system it is possible to supply buffer/barrier fluid to double and tandem mechanical seals for a broad range of applications. This range is designed as a flanged version with a sight-glass for level monitoring and with cooling coil. TS vessels are equipped as standard with all the necessary system connections and brackets. The modular system allows the TS5000 vessels to be combined with a wide range of system components such as, level switch, circulation pump, hand refill pump, thermometer, base frame, etc.

Circulation in accordance with API 682/ ISO 21 049: Plan 52, Plan 53A

Advantages

- Vessel can be dismantled: for optimum and simple cleaning of the vessel interior
- Suitable for a wide range of demanding operating conditions: TS5000 up to 30 bar/ 200 °C
- Sockets with recessed gasket: no contamination of the circuit by thread sealant
- Modular system: combination with a wide range of system components possible
- Vessel made of 1.4571 stainless steel/ borosilicate sight-glasses: suitable for universal applications

Functional description

The TS system performs all the basic functions of a buffer/barrier system for the operation of double seals:

- to pressurize the buffer/barrier chamber
- leakage compensation
- buffer/barrier fluid is circulated by thermosiphon effect or forced circulation system
- to cool the seal
- to selectively absorb product leakage and prevent dry running (tandem arrangement)

Use compressed air or nitrogen for pressurization.

Standards and approvals

- PED 97/23 EC (Design and production in accordance with EU Pressure Equipment Directive)

Recommended applications

- Chemical industry
- Petrochemical industry
- Oil and gas industry
- Refining technology

Item	Description
1	Buffer/barrier fluid IN (G1/2")
2	Buffer/barrier fluid OUT (G1/2")
3	Cooling water IN (G1/2")
4	Cooling water OUT (G1/2")
5	Filling connection with plug (G1/2")
6	Pressure gas connection (G1/2")
7	Connection for level switch or level indicator (G2")
8	Connection for refill unit (G1/8")
9	Universal connection (G1/2" for safety valve, flare, etc.)
10	Bracket for refill unit
11	Sight-glass

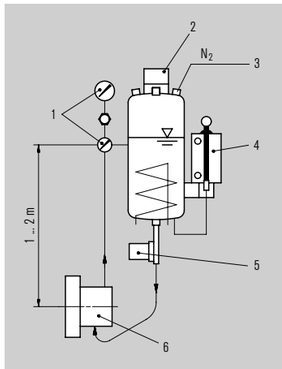

Operating and installation diagram for a TS5000 system.

The TS vessel must always be installed higher than the mechanical seal. The buffer/barrier fluid flows via the return pipe into the vessel and is cooled. The exchange of fluid takes place by the thermosiphon principle or by forced circulation, e. g. with a pumping screw. Connection pipes to the seal should be designed with as little resistance as possible.

1	SPI
2	SPS
3	From PCV, we recommend using a reverse controlled pressure control
4	SPN
5	SPU
6	Mechanical seal

Designation	TS5000
Pressure Equipment Directive	PED
Integrated cooling coil	■
Volume, vessel (liters)	10
Volume, tube (liters)	0.5
Allowable pressure[1)]	30 bar (435 PSI)
Allowable temperature[1)]	–60 °C ... +200 °C (–76 °F ... +392 °F)
Working volume, MAX-MIN (liters)	1.8
Cooling capacity – without cooling water (kW)[3)]	0.5
Cooling capacity – natural circulation (kW)[2)]	1.5
Cooling capacity – forced circulation (kW)[2)]	4
Required cooling water quantity (m^3/h)	0.4
Metal parts	1.4571
Sight-glass	Reflex sight-glass Borosilicate
Seal	PTFE

Other versions on request.

1) Design data, permissible working values depend on the actual conditions of service

2) Guidelines with buffer/barrier fluid water 60 °C – cooling water 20 °C

3) Guidelines with buffer/barrier fluid water 60 °C – ambient temperature 20 °C
(valid for thermosiphon systems without cooling water with natural circulation resp. forced circulation)

TS6000

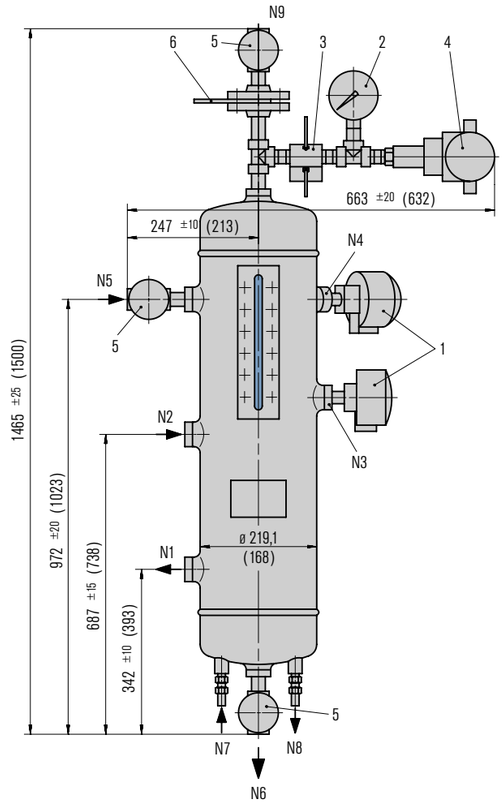

Features

The EagleBurgmann Thermosiphon systems of the TS6000 range meet all the requirements to supply mechanical seals in accordance with the API 682 guidelines. The vessels are equipped with all essential connections for fitting additional components. The range is available in two standard vessel sizes (shown above: TS6000) with dished heads; a version which can be dismantled is also available as an option. The modular system allows the TS6000 vessels to be combined with a wide range of system components such as, level switch/transmitter, pressure switch/ transmitter, base frame, etc.

Circulation in accordance with API 682/ ISO 21 049: Plan 52, Plan 53A

Advantages

- Operating limits up to 50 bar/200 °C: suitable for a wide range of demanding operating conditions
- Robust design with weld-pad type sight-glass for optimum visual level monitoring
- Modular system: combination with a wide range of system components possible
- A version which can be dismantled is also available as an option: for optimum and simple cleaning of the vessel interior

Functional description

The TS system performs all the basic functions of a buffer/barrier system for the operation of double seals:
- to pressurize the buffer/barrier chamber
- leakage compensation
- buffer/barrier fluid is circulated by thermosiphon effect or forced circulation system
- to cool the seal
- to selectively absorb product leakage and prevent dry running (tandem arrangement)

Use compressed air or nitrogen for pressurization; pressurization is monitored by a pressure switch. The incorporated level switch issues a signal whenever the level of buffer/barrier fluid is too low.

Standards and approvals

- PED 97/23 EC (TS6001/TS6003: design and production in accordance with EU Pressure Equipment Directive)
- ASME VIII, Div. 1 (TS6000/TS6002: design, calculation and production)

Recommended applications

- Refining technology
- Oil and gas industry
- Chemical Industry
- Petrochemical industry

Item	Description
	Thermosiphon system (API Plan 52)
1	Level switch
2	Manometer
3	Manifold
4	Pressure switch
5	Shut-off valve
6	Orifice
N1	to the mechanical seal
N2	from the mechanical seal
N3	Level switch
N4	Level switch
N5	Filling connection
Bottom	
N6	Drain
N7	Cooling water IN
N8	Cooling water OUT
Cover	
N9	Connection to flare

Dimensions for TS6002/TS6003, values in brackets for TS6000/TS6001

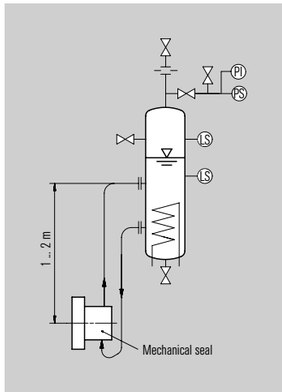

Operating and installation diagram for a TS6000 system.

The TS vessel must always be installed higher than the mechanical seal. The buffer/barrier fluid flows via the return pipe into the vessel and is cooled. The exchange of fluid takes place by the thermosiphon principle or by forced circulation, e. g. with a pumping screw. Connection pipes to the seal should be designed with as little resistance as possible.

Product variants

TS6002/TS6003

Version of the **TS6000** vessel which can be dismantled (shown with a range of system components).

Designation	TS6000	TS6001	TS6002	TS6003
Pressure Equipment Directive	ASME	PED	ASME	PED
For shaft diameters ≤ 60 mm (acc. to API 682)	■	■		
For shaft diameters > 60 mm (acc. to API 682)			■	■
Integrated cooling coil	■	■	■	■
Volume, vessel (liters)	15	15	26	26
Volume, tube (liters)	0.3	0.3	0.4	0.4
Allowable pressure – shell[1)]	50 bar (725 PSI)	50 bar (725 PSI)	50 bar (725 PSI)	50 bar (725 PSI)
Allowable pressure – tube[1)]	16 bar (232 PSI)	16 bar (232 PSI)	16 bar (232 PSI)	16 bar (232 PSI)
Allowable temperature[1)]	200 °C (392 °F)	200 °C (392 °F)	200 °C (392 °F)	200 °C (392 °F)
Liquid volume at NLL – Normal Liquid Level (liters)	12	12	20	20
Working volume MAX-MIN (liters)	4	4	6.5	6.5
Cooling capacity – without cooling water (kW)[3)]	0.75	0.75	1	1
Cooling capacity – natural circulation (kW)[2)]	1.9	1.9	2.5	2.5
Cooling capacity – forced circulation (kW)[2)]	5	5	6.5	6.5
Required cooling water quantity (m^3/h)	0.4	0.4	0.7	0.7
Metal parts	1.4404	1.4404	1.4404	1.4404
Sight-glass	Borosilicate	Borosilicate	Borosilicate	Borosilicate
Seal	PTFE	PTFE	PTFE	PTFE
Net weight (approx.)	68 kg (150 lb)	68 kg (150 lb)	75 kg (165 lb)	75 kg (165 lb)

Other versions on request.
1) Design data, permissible working values depend on the actual conditions of service
2) Guidelines with buffer/barrier fluid water 60 °C – cooling water 20 °C
3) Guidelines with buffer/barrier fluid water 60 °C – ambient temperature 20 °C
(valid for thermosiphon systems without cooling water with natural circulation resp. forced circulation)

SPO (Plan 53B)

Features

Pressurized barrier system (closed circuit) for use in seal systems with high pressures and/or for hazardous/environmentally harmful processes. The SPO (Plan 53B) range is available with a pressure accumulator, cooler (finned tube, water or air cooler with fan) and a wide range of instruments.

Circulation in accordance with API 682/ ISO 21 049: Plan 53B

Advantages

- Pressurization is by means of a pre-loaded bladder accumulator
- The nitrogen is separated from the barrier medium by membranes in the accumulator: nitrogen cannot get into the barrier medium or process medium
- Barrier pressure is created without any need for connection to a nitrogen supply
- Available with finned tube, water or air coolers with fan
- Modular system: combination with a wide range of system components/instruments possible

Functional description

The SPO is designed to perform the following functions of a barrier system:
- to pressurize the buffer chamber
- leakage compensation
- to cool the seal

Pressurization (> process pressure) prevents the process medium from getting into the barrier circuit or the atmosphere. Pressurization is supplied by a pressure accumulator which is pre-loaded with nitrogen. Circulation in the barrier circuit takes place by the thermosiphon principle or by forced circulation, e. g. with a pumping screw.

Standards and approvals

- PED 97/23 EC (Design and production in accordance with EU Pressure Equipment Directive)
- ASME VIII, Div. 1 (Design, calculation and production)

Recommended applications

- Petrochemical industry
- Chemical industry
- Oil and gas industry
- Refining technology

Notes

A refilling unit has to be provided.

Product variant

SPO with a helical finned tube cooler

SPO (Plan 53C)

Features

Pressurized barrier system (closed circuit) for use in seal systems with high pressures and/or for hazardous/environmentally harmful processes. The SPO (Plan 53C) range is available with a pressure booster, cooler (finned tube, water or air cooler with fan) and a wide range of instruments.

Circulation in accordance with API 682/ ISO 21 049: Plan 53C

Advantages

- Pressurization is by means of a pressure booster
- Automatic setting of the barrier pressure via reference pressure: simple and reliable mode of operation
- Safe operation even in case of pressure changes
- Barrier pressure is created without any need for connection to a nitrogen supply
- Available with finned tube, water or air coolers with fan
- Modular system: combination with a wide range of system components/instruments possible

Functional description

The SPO is designed to perform the following functions of a barrier system:
- to pressurize the buffer chamber
- leakage compensation
- to cool the seal

Pressurization (> process pressure) prevents the process medium from getting into the barrier circuit or the atmosphere. Pressurization is supplied by a pressure booster in dependency on the process pressure. Circulation in the barrier circuit takes place by the thermosiphon principle or by forced circulation, e. g. with a pumping screw.

Standards and approvals

- PED 97/23 EC (Design and production in accordance with EU Pressure Equipment Directive)
- ASME VIII, Div. 1 (Design, calculation and production)

Recommended applications

- Petrochemical industry
- Chemical industry
- Oil and gas industry
- Refining technology

Notes

A refilling unit has to be provided.

DRU2000

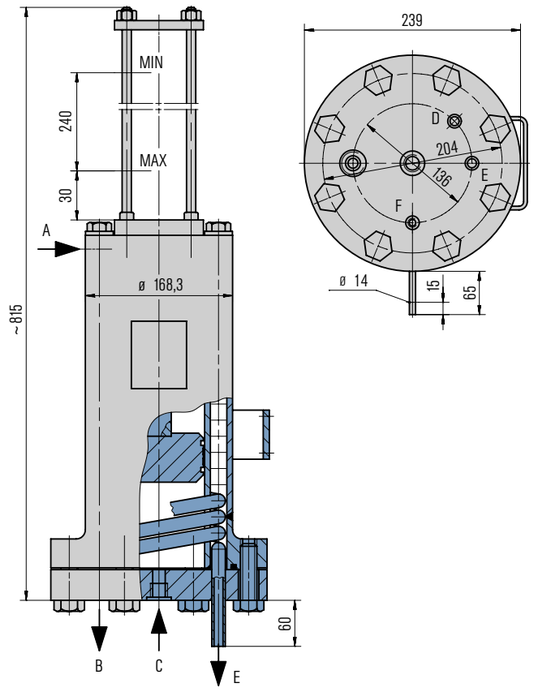

Features

With the EagleBurgmann DRU system it is possible to supply barrier fluid to double and tandem mechanical seals for a broad range of applications. Pressure boosters are equipped as standard with all the necessary system connections and brackets. System components can thus be installed to suit all requirements. The maximum operating pressure of 63 bar applies to the housing of the pressure booster, i. e. the process/medium pressure at the connection must be lower and is conditional on the transmission ratio:
DRU2063/A001 up to 57 bar
DRU2063/A002 up to 42 bar

Circulation in accordance with API 682/ ISO 21 049: Plan 53C

Advantages

- Automatic setting of the barrier pressure via reference pressure: simple and reliable mode of operation
- Safe operation even in case of pressure changes
- Barrier pressure is created without any need for connection to a nitrogen supply
- Housing is easy to dismantle: all parts are readily accessible for cleaning
- Protective pipe for piston rod made of borosilicate glass: optimum level monitoring
- Sockets with recessed gasket: no contamination of the circuit by thread sealant
- Modular system: combination with a wide range of system components possible

Functional description

The function of the DRU system is similar in principle to the TS system. The difference is that the barrier pressure is created by the reference pressure without any additional superimposition of nitrogen. The pressure booster is for storing and cooling the barrier fluid. Pressurization is by means of a piston in dependency on the process/medium pressure. Automatic pressure increase in accordance with the transmission ratio.

Standards and approvals

- PED 97/23 EC (Design and production in accordance with EU Pressure Equipment Directive)
- ASME VIII, Div. 1 (Design, calculation and production)

Recommended applications

- Refining technology
- Oil and gas industry
- Chemical industry
- Petrochemical industry

Item	Description
A	Barrier medium IN (G1/2") connection possible for SPI2063
B	Barrier medium OUT (G1/2")
C	Process medium (G1/2")
D	Coolant IN (tube 15 x 1.5)
E	Coolant OUT (tube 15 x 1.5)
F	Connection for SPN (G1/8")

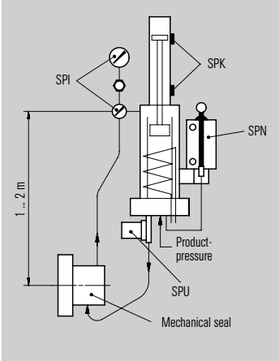

Operating and installation diagram for a DRU system.

The DRU pressure booster must always be installed higher than the mechanical seal. The barrier fluid flows via the return pipe into the vessel and is cooled. The exchange of fluid takes place by the thermosiphon principle or by forced circulation, e. g. with a pumping screw. Connection pipes to the seal should be designed with as little resistance as possible.

Designation	DRU2063/A001	DRU2063/A002	DRU2063/A101	DRU2063/A102
Pressure Equipment Directive	PED	PED	ASME	ASME
Integrated cooling coil	■	■	■	■
Transmission ratio	1:1.1	1:1.5	1:1.1	1:1.5
Volume, jacket (liters)	4	4	4	4
Volume, cooling coil (liters)	0.7	0.7	0.7	0.7
Allowable pressure[1]	63 bar (913 PSI)	63 bar (913 PSI)	63 bar (913 PSI)	63 bar (913 PSI)
Allowable process/medium pressure at connections C[1]	57 bar (827 PSI)	42 bar (609 PSI)	57 bar (827 PSI)	42 bar (609 PSI)
Allowable temperature[1]	–60 °C ... +200 °C (–76 °F ... +392 °F)	–60 °C ... +200 °C (–76 °F ... +392 °F)	–60 °C ... +200 °C (–76 °F ... +392 °F)	–60 °C ... +200 °C (–76 °F ... +392 °F)
Working volume, MAX-MIN (liters)	2	1.5	2	1.5
Cooling capacity – without cooling water (kW)[3]	0.5	0.5	0.5	0.5
Cooling capacity – natural circulation (kW)[2]	1.5	1.5	1.5	1.5
Cooling capacity – forced circulation (kW)[2]	4	4	4	4
Required cooling water quantity (m^3/h)	0.4	0.4	0.4	0.4
Metal parts	1.4571	1.4571	1.4571	1.4571
Protective tube for piston rod	Borosilicate	Borosilicate	Borosilicate	Borosilicate
Seal	PTFE	PTFE	PTFE	PTFE
Net weight (approx.)	51 kg (112 lb)	51 kg (112 lb)	51 kg (112 lb)	51 kg (112 lb)

Other versions on request.
[1] Design data, permissible working values depend on the actual conditions of service
[2] Guidelines with barrier fluid water 60 °C – cooling water 20 °C
[3] Guidelines with barrier fluid water 60 °C – ambient temperature 20 °C
(valid for pressure booster systems without cooling water with natural circulation resp. forced circulation)

SPA

Features

Barrier pressure units of the SPA range perform all the functions of a barrier system essential for operating double seals (circulation and cooling of the barrier medium, pressurization of the barrier fluid and compensation of leakage). The SPA range is available in 3 basic versions:
SPA1000: tank capacity 40 l, flow rate 6 l/min.
SPA2000: tank capacity 100 l, flow rate 12 l/min.
SPA3000: tank capacity 100 l, flow rate 23 l/min.

The three SPA ranges are designed for hydraulic oil with viscosity values of 12 to 90 mm^2/s at operating temperature (tank temperature). The optimum viscosity of the class of the oil to be used has to be determined separately in accordance with the respective application.

Advantages

- Max. operating temperature in the tank 80 °C (return line max. 90 °C)
- Temperature monitoring with a return line and tank thermometer
- Barrier fluid directed through oil cooler
- Reversible double filter (SPA1000: single filter)
- Manual control of barrier fluid pressure
- Relief valve for reducing barrier fluid pressure at standstill
- Level switch with contact for MIN level
- Measuring instrument connections suitable for fitting contact switching devices (NG160)
- Provision of an additional pressure connection for monitoring the pump discharge pressure (outside the circuit)

Functional description

The barrier pressure for circulation is generated by a gear pump. The setpoint barrier pressure is set on an overflow valve in the mechanical seal return line. From this point on the barrier fluid flows back without pressure through a filter and a heat exchanger to the storage tank. To enable systems (pump, agitator) to be stopped without causing damage to the seal in the event of a malfunction (e. g. power failure, damaged motor, etc.), the barrier pressure unit can be fitted with a pressure accumulator unit. To prevent the pressure in the accumulator discharging to the pressureless storage tank, the return line has a pilot-operated check valve, and the supply line also has a simple check valve. The barrier pressure is retained for a limited time. However, no circulation takes place and no heat is dissipated from the mechanical seal.

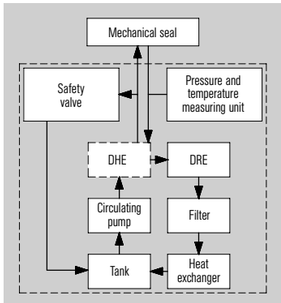

Installation and operating diagram for a SPA system

Materials

- Storage tank, measuring instruments, cooler and piping are made of stainless steel
- Fittings, distributor units, shut-off valves and tank lid are made of galvanized steel

Recommended applications

- Chemical industry
- Petrochemical industry
- Refining technology
- Oil and gas industry

Product variants

SPA4000 versions for water and other media available as an option.

Version, designation	Nominal pressure, max. barrier pressure	Flow rate (l/min)	Cooling capacity (kW) with hydraulic oil Δt = 10K	Pressure accumulator DHE	Tank		Dimensions overall (mm)			Net weight approx.	Motor data			
					Nominal capacity (liters)	Usable volume (liters)	Height	Width	Depth		Nominal power (kW)	Voltage, frequency	Speed (min^{-1})	Ex-Protection
SPA1015/A01	15 bar (218 PSI)	6	1.8		40	12	650	610	380	125 kg (276 lb)	1			
SPA1015/A02	15 bar (218 PSI)	6	1.8	■	40	12	650	610	380	125 kg (276 lb)	1			
SPA1040/A01	40 bar (580 PSI)	6	1.8		40	12	650	610	380	125 kg (276 lb)	1			
SPA1040/A02	40 bar (580 PSI)	6	1.8	■	40	12	650	610	380	125 kg (276 lb)	1			
SPA1090/A01	90 bar (1,305 PSI)	6	1.8		40	12	650	610	380	125 kg (276 lb)	2			
SPA1090/A02	90 bar (1,305 PSI)	6	1.8	■	40	12	650	610	380	125 kg (276 lb)	2			
SPA2020/A01	20 bar (290 PSI)	12	3.6		100	20	750	800	555	140 kg (309 lb)	1			
SPA2020/A02	20 bar (290 PSI)	12	3.6	■	100	20	750	800	555	140 kg (309 lb)	1			ATEX II2G
SPA2050/A01	50 bar (725 PSI)	12	3.6		100	20	750	800	555	140 kg (309 lb)	2	400 V		EEPe
SPA2050/A02	50 bar (725 PSI)	12	3.6	■	100	20	750	800	555	140 kg (309 lb)	2	50 Hz	1,500	II T3
SPA2120/A01	120 bar (1,740 PSI)	12	3.6		100	20	750	800	555	140 kg (309 lb)	3.6			IP54
SPA2120/A02	120 bar (1,740 PSI)	12	3.6	■	100	20	750	800	555	140 kg (309 lb)	3.6			
SPA3020/A01	20 bar (290 PSI)	23	6.9		100	20	750	800	555	140 kg (309 lb)	2			
SPA3020/A02	20 bar (290 PSI)	23	6.9	■	100	20	750	800	555	140 kg (309 lb)	2			
SPA3050/A01	50 bar (725 PSI)	23	6.9		100	20	750	800	555	140 kg (309 lb)	3.6			
SPA3050/A02	50 bar (725 PSI)	23	6.9	■	100	20	750	800	555	140 kg (309 lb)	3.6			
SPA3120/A01	120 bar (1,740 PSI)	23	6.9		100	20	750	800	555	140 kg (309 lb)	6.8			
SPA3120/A02	120 bar (1,740 PSI)	23	6.9	■	100	20	750	800	555	140 kg (309 lb)	6.8			

DHE Pressure accumulator unit

Features

The DHE consists of an accumulator, a pressure gauge with a shut-off valve and a check valve. The DHE can also be retrofitted to an SPA (Conversion kit No.: DHE140/R001-00).

Advantages

- Suitable for retrofitting to an SPA system (SPA1000, SPA2000, SPA3000)

Functional description

The DHE is used to maintain the barrier fluid pressure for a limited period after the SPA circulating pump has failed or been switched off. It prevents a loss of pressure on the mechanical seal and stops it from opening. The seal, however, is no longer cooled and must therefore be brought to an immediate stop. How long the pressure is maintained will depend on the following two factors: the rate of leakage of the mechanical seal and the amount of buffered fluid stored in the accumulator.

Recommended applications

- Chemical industry
- Petrochemical industry
- Refining technology
- Oil and gas industry

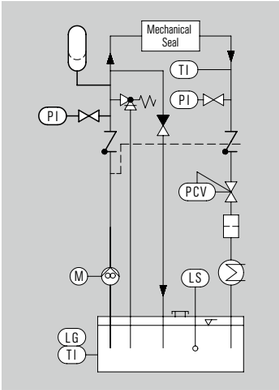

Operating and installation diagram for the **DHE**

DRE Pressure control unit

Features

The pressure control unit is used for setting different levels of barrier pressure when supplying several individual mechanical seals via an SPA with a VTE. There is a choice of 4 basic types.

Advantages

- Suitable for hydraulic oil
- Max. flow rate 23 l/min.
- Max. setting pressure of up to 160 bar

Recommended applications

- Chemical industry
- Petrochemical industry
- Refining technology
- Oil and gas industry

Designation	Max. setting pressure	Max. flow rate (l/min.)	Measuring range
DRE025	25 bar (362 PSI)	23	0 ... 25 bar
DRE050	50 bar (725 PSI)	23	0 ... 60 bar
DRE100	100 bar (1,450 PSI)	23	0 ... 100 bar
DRE160	160 bar (2,320 PSI)	23	0 ... 160 bar

VTE Distribution unit

Features

The distribution unit is used when two or more mechanical seals are to be supplied from a single barrier fluid unit of the SPA1000, SPA2000 or SPA3000 range. The VTE is suitable for hydraulic oil as barrier medium. It is delivered as a separate unit which the customer must install in the pipe work at a suitable position. There is a choice of 2 basic types:

VTE02/M ... : Distribution unit for supplying two or more mechanical seals in between bearing pumps.

VTE .../S ... : Distribution unit for supplying two or more mechanical seals in different pumps. It contains an overflow valve and one flow control valve per seal. DRE pressure control units are necessary if different barrier pressures are used on the mechanical seals.

Advantages

- Distribution unit for supplying several mechanical seals
- Suitable for hydraulic oil

Recommended applications

- Chemical industry
- Petrochemical industry
- Refining technology
- Oil and gas industry

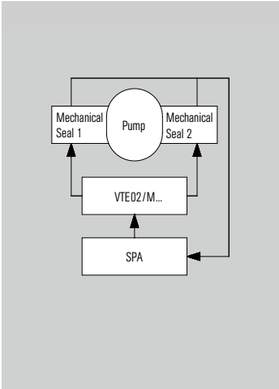

Operating diagram for the **VTE 02/M ...**

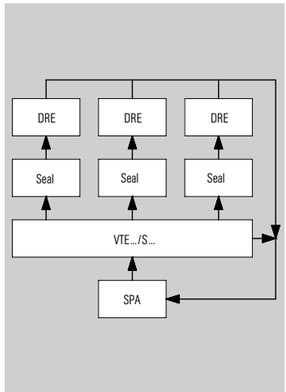

A diagrammatic example for supplying three mechanical seals

Distribution unit for supplying two mechanical seals in between bearing pumps

Designation	Max. barrier pressure	Allowable temperature	Norm. flow/ inlet (l/min)	Individual current (l/min.)	Allowable viscosity range (mm²/s)	Suitable for
VTE02/M060	250 bar (3,626 PSI)	–20 °C ... +80 °C (–4 °F ... +176 °F)	6	2 x 3	10 ... 300	SPA1040/A01 (A02) SPA1090/A01 (A02)
VTE02/M120	250 bar (3,626 PSI)	–20 °C ... +80 °C (–4 °F ... +176 °F)	12	2 x 6	10 ... 300	SPA2020/A01 (A02) SPA2050/A01 (A02) SPA2120/A01 (A02)
VTE02/M230	250 bar (3,626 PSI)	–20 °C ... +80 °C (–4 °F ... +176 °F)	23	2 x 11.5	10 .. 300	SPA3020/A01 (A02) SPA3050/A01 (A02) SPA3120/A01 (A02)

Distribution unit for supplying two or more mechanical seals in different pumps

Designation	Max. barrier pressure	Allowable temperature	Norm. flow/ inlet (l/min.)	Individual current (l/min.)	Allowable viscosity range (mm²/s)	Suitable for	Quantity of supplied mechanical seals
VTE02/S020	210 bar (3,046 PSI)	–20 °C ... +70 °C (–4 °F ... +158 °F)	6	2 x 2.5	2.8 ... 380	SPA1040/A01 (A02) SPA1090/A01 (A02)	2
VTE02/S050	210 bar (3,046 PSI)	–20 °C ... +70 °C (–4 °F ... +158 °F)	12	2 x 5	2.8 ... 380	SPA2020/A01 (A02) SPA2050/A01 (A02) SPA2120/A01 (A02)	2
VTE02/S110	210 bar (3,046 PSI)	–20 °C ... +70 °C (–4 °F ... +158 °F)	23	2 x 11	2.8 ... 380	SPA3020/A01 (A02) SPA3050/A01 (A02) SPA3120/A01 (A02)	2
VTE03/S030	210 bar (3,046 PSI)	–20 °C ... +70 °C (–4 °F ... +158 °F)	12	3 x 3.5	2.8 ... 380	SPA2020/A01 (A02) SPA2050/A01 (A02) SPA2120/A01 (A02)	3
VTE03/S072	210 bar (3,046 PSI)	–20 °C ... +70 °C (–4 °F ... +158 °F)	23	3 x 7	2.8 ... 380	SPA3020/A01 (A02) SPA3050/A01 (A02) SPA3120/A01 (A02)	3
VTE04/S021	210 bar (3,046 PSI)	–20 °C ... +70 °C (–4 °F ... +158 °F)	12	4 x 2.5	2.8 ... 380	SPA2020/A01 (A02) SPA2050/A01 (A02) SPA2120/A01 (A02)	4
VTE04/S052	210 bar (3,046 PSI)	–20 °C ... +70 °C (–4 °F ... +158 °F)	23	4 x 5	2.8 ... 380	SPA3020/A01 (A02) SPA3050/A01 (A02) SPA3120/A01 (A02)	4

Versions for supplying more than four mechanical seals on request.

SPN

Features

The SPN is used as an automatic refill unit and for barrier fluid pressurization in seal circuits. It is possible to use pneumatic or electric power, or a combination of both for the pressurization. The refill unit tank is designed for pressureless operation and is equipped with a level switch and a sight-glass (automatic refill unit also available as an option). The refill unit has all pipework as far as the distributor unit. Separate components are installed in the seal circuit to cool and to circulate the barrier medium. The SPN range is available in 2 basic versions:
SPN1000: Vessel capacity 20 or 40 liters
SPN3000: Vessel capacity 40, 60 or 200 liters

Barrier fluid pressure regulation for the SPN1000 via pressure switch to the pump control.
The SPN3000 is equipped with a pressure regulator for maintaining a constant barrier pressure level.

Advantages

- Reliable mode of operation: should the pump be switched off, the barrier fluid pressure will be maintained for a limited time by an integrated accumulator
- Membrane accumulator acts as a pulsation damper/barrier fluid storage tank
- SPN3000: maintains constant barrier pressure irrespective of hysteresis-induced pressure fluctuations of the pressure switch
- Visual level indicator via sight-glass on the vessel

Functional description

SPN automatic refill units differ from an SPA in that they perform just two of the four basic functions of a barrier fluid system, namely barrier fluid pressurization and leakage compensation. It is possible to use a piston pump with either electric or pneumatic power for pressurization of the barrier medium. Should all the pumps fail, the pressure will be maintained in the refill unit for a limited time to ensure that pressurization of the barrier fluid circuit is maintained. How long the pressure is maintained will depend on the storage volume and the leakage losses to be compensated.

Product variants

The **SPN automatic refill unit** can be supplied with a wide range of system components and engineered systems to meet specific customer requirements.

Materials

Parts in contact with the medium are made of stainless steel.
Secondary seals and elastomers are resistant to water, demineralized water and hydraulic oil.

Recommended applications

- Chemical industry
- Petrochemical industry
- Oil and gas industry
- Refining technology

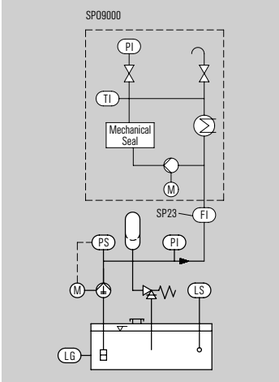

Operating and installation diagram for an automatic refill unit.

Designation	Barrier fluid pressure adjustable from ... to	Max. flow rate (l/h)	Vessel volume (liters)	Number of pumps	Type of drive	Nominal output (kW)	Max air rate (Nm^3/h)	Approx. overall dimensions in cm H x W x B	Net weight (approx.)
SPN1020/E002	0,5 ... 20 bar (7,25 ... 290 PSI)	10	20	1	E	0.18	–	69 x 37 x 36	40 kg (88 lb)
SPN1020/L002	5 ... 20 bar (73 ... 290 PSI)	60	20	1	L	–	26	58 x 37 x 36	30 kg (66 lb)
SPN1063/E002	5 ... 63 bar (73 ... 914 PSI)	10	20	1	E	0.18	–	69 x 37 x 36	40 kg (88 lb)
SPN1063/L002	20 ... 63 bar (290 ... 914 PSI)	60	20	1	L	–	26	58 x 37 x 36	30 kg (66 lb)
SPN1063/E004	5 ... 63 bar (73 ... 914 PSI)	10	40	1	E	0.18	–	69 x 69 x 36	50 kg (110 lb)
SPN1063/L004	20 ... 63 bar (290 ... 914 PSI)	60	40	1	L	–	26	58 x 69 x 36	40 kg (88 lb)
SPN1063/EE04	5 ... 63 bar (73 ... 914 PSI)	20	40	2	E	2 x 0.18	–	69 x 69 x 36	60 kg (132 lb)
SPN1063/LL04	20 ... 63 bar (290 ... 914 PSI)	120	40	2	L	–	52	58 x 69 x 36	50 kg (110 lb)
SPN1063/EL04	20 ... 63 bar (290 ... 914 PSI)	70	40	2	EL	0.18	26	69 x 69 x 36	60 kg (132 lb)
SPN3035/E004	4 ... 35 bar (58 ... 508 PSI)	10	40	1	E	0.18	–	69 x 69 x 36	70 kg (154 lb)
SPN3035/L004	4 ... 35 bar (58 ... 508 PSI)	60	40	1	L	–	30	58 x 69 x 36	60 kg (132 lb)
SPN3035EL06	4 ... 35 bar (58 ... 508 PSI)	70	60	2	EL	0.18	30	69 x 100 x 37	80 kg (176 lb)
SPN3035/EE06	4 ... 35 bar (58 ... 508 PSI)	20	60	2	EE	2 x 0.18	–	69 x 100 x 37	80 kg (176 lb)
SPN3035/LL06	4 ... 35 bar (58 ... 508 PSI)	120	60	2	LL	–	60	58 x 100 x 37	70 kg (154 lb)
SPN3063/E020	0 ... 63 bar (0 ... 914 PSI)	130	200	1	E	1.1	–	110 x 175 x 100	120 kg (265 lb)
SPN3063/L020	0 ... 63 bar (0 ... 914 PSI)	300	200	1	L	–	175	100 x 130 x 70	300 kg (661 lb)
SPN3063/EL20	0 ... 63 bar (0 ... 914 PSI)	430	200	2	EL	1.1	175	110 x 175 x 100	450 kg (992 lb)
SPN3063/EE20	0 ... 63 bar (0 ... 914 PSI)	260	200	2	EE	2 x 1.1	–	110 x 175 x 100	500 kg (1,102 lb)
SPN3063/LL20	0 ... 63 bar (0 ... 914 PSI)	600	200	2	LL	–	350	100 x 130 x 170	400 kg (882 lb)
SPN3120/E020	0 ... 120 bar (0 ... 1,740 PSI)	130	200	1	E	2.5	–	110 x 175 x 100	450 kg (992 lb)
SPN3120/L020	0 ... 120 bar (0 ... 1,740 PSI)	300	200	1	L	–	175	100 x 130 x 70	300 kg (661 lb)
SPN3120/EL20	0 ... 120 bar (0 ... 1,740 PSI)	430	200	2	EL	2.5	175	110 x 175 x 100	480 kg (1,058 lb)
SPN3120/EE20	0 ... 120 bar (0 ... 1,740 PSI)	260	200	2	EE	2 x 2.5	–	110 x 175 x 100	500 kg (1,102 lb)
SPN3120/LL20	0 ... 120 bar (0 ... 1,740 PSI)	600	200	2	L	–	350	100 x 130 x 70	400 kg (882 lb)

Other versions on request.
General features:
All connecting threads G1/2"
Type of protection: Ex e II T3

SPN

Features

The hand refill pump (shown above: SPN4016) consists of a storage vessel with level indicator, filling filter and a hand pump with integrated check valve. It is mounted directly on the thermosiphon vessel or pressure booster. Therae is a choice of 2 basic types in the SPN range of products:
SPN2000: Stainless steel hand refill pump for universal applications
SPN4000: specifically for use with TS1016 systems (picture: SPN4016)

Advantages

- For efficient processes, with a choice of 2 basic types
- For manual refilling of barrier fluid units during operation
- SPN4016 vessel made of polyethylene: suitable for use in potentially explosive environments
- SPN2000 in stainless steel and acrylic or borosilicate sight-glasses: suitable for highly corrosive media
- Two sight-glasses for reading the MIN/MAX fluid level
- Reliable mode of operation: Combined filling and ventilation filter in the hand refill pump

Functional description

The hand refill pump is designed for manual refilling during operation in case of barrier fluid losses.

Recommended applications

- Chemical industry
- Petrochemical industry
- Oil and gas industry
- Refining technology
- Pulp and paper industry
- Food and beverage industry

Product variant

SPN2063

Designation	Volume (liters)	Max. temperature	Material, sight-glass/seal		Material, filling filter		Pressure control valve			
			Acrylic glass, Perbunan®	Borosilicate, T2	Polyamide	Stainless steel	None	16 bar (232 PSI)	30 bar (435 PSI)	63 bar (913 PSI)
SPN2030	2	60 °C (140 °F)	■		■				■	
SPN2063	2	60 °C (140 °F)	■		■		■			
SPN2063/A015	2	60 °C (140 °F)	■		■					■
SPN2063/A100	2	60 °C (140 °F)		■	■		■			
SPN2063/A200	2	60 °C (140 °F)		■		■	■			
SPN4016	2	60 °C (140 °F)	■		■			■		

WDK

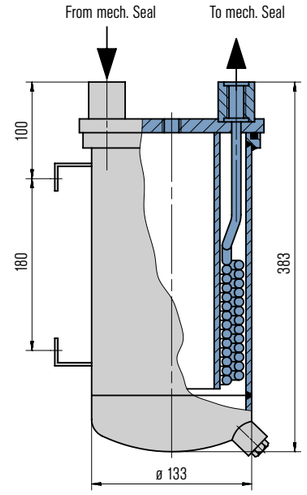

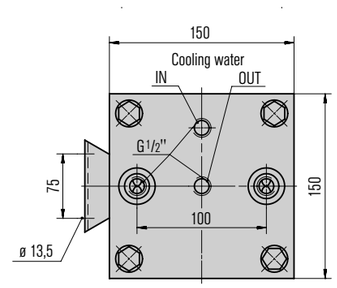

Features

WDK5120 heat exchangers are used to cool process/barrier fluids in seal supply circuits. The heat exchanger has a wound double helix around the guide tube. Process/barrier medium in the tubes, cooling medium around the tubes.

Circulation in accordance with API 682/ ISO 21 049: Plan 21, Plan 22, Plan 23, Plan 41

Advantages

- Effective cooling: with wound double helix around a guide tube
- Cooling capacity up to 10.5 kW
- Excellent value for money
- Vessel can be dismantled: for optimum cleaning of the cooling water side
- Universal usage: parts in contact with the buffer medium are made of 1.4571

Standards and approvals

- PED 97/23 EC (Design and production in accordance with EU Pressure Equipment Directive)

Recommended applications

- Chemical industry
- Petrochemical industry
- Power plant technology
- Refining technology
- Oil and gas industry

Notes

Cleaning:
Cooling water side: the area around the tubes can be cleaned mechanically after the housing is removed.
Process/barrier medium side: flush with a suitable solvent.

Designation	WDK5120/A003	
	Tube	Shell
Pressure Equipment Directive	PED	
Design pressure[1)]	120 bar (1,740 PSI)	16 bar (232 PSI)
Design temperature[1)]	160 bar (2,321 PSI)	95 bar (1,378 PSI)
Inlet temperature[2)]	70 °C (158 °F)	25 °C (77 °F)
Flow rate[2)]	10 l/min	1.8 m³/h
Volume (liters)	0.34	1.13
Cooling surface[2)]	0.3 m²	
Cooling capacity (kW)	10.5	
Net weight (approx.)	10.3 kg (23 lb)	
Full weight (approx.)	11.8 kg (26 lb)	
Metal parts	1.4571	Carbon steel, primed on the outside
Seals		Viton®
Screws		Stainless steel A4-70

Other versions on request.
1) These values are based on the calculation of strength.
2) These values are based on the calculation of heat.

WED

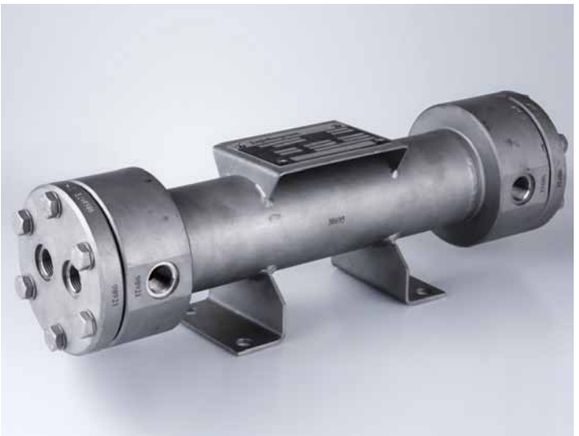

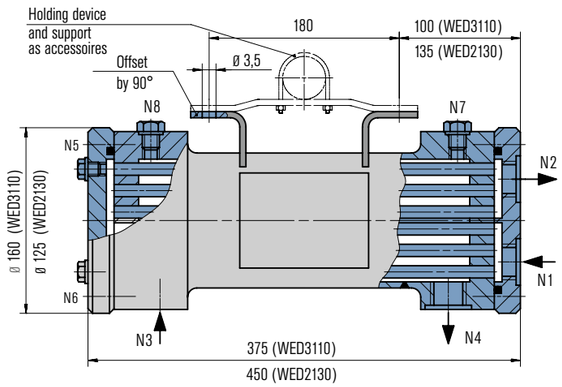

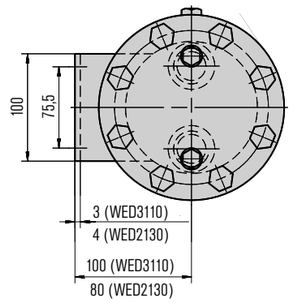

Features

Heat exchangers of the WED range are used to cool process/barrier fluids in seal supply circuits. Designed as a tubular heat exchanger with integrated guide plates, the buffer medium is directed through the shell of the WED and the cooling medium through the tubes.

Circulation in accordance with API 682/ ISO 21 049: Plan 21, Plan 22, Plan 23, Plan 41

Advantages

- Tubular heat exchanger design with integrated guide plates: extremely efficient cooling capacity yet very compact dimensions
- Cooling capacity up to 36 kW*)
- Universal usage: parts in contact with the medium are made of 1.4571
- It can be installed either in vertical or horizontal position
- The heat exchanger can be dismantled: easy to clean

Standards and approvals

- PED 97/23 EC (Design and production in accordance with EU Pressure Equipment Directive)
- ASME VIII, Div. 1 (Design, calculation and production)

Recommended applications

- Chemical industry
- Petrochemical industry
- Oil and gas industry
- Refining technology
- Power plant technology

Notes

Cleaning:
Cooling water side: it can be cleaned mechanically after the cover is removed. Process/barrier medium side: flush with a suitable solvent.

Item	Description
Connections	
N2	Cooling water OUT
N1	Cooling water IN
N4	Process/barrier medium OUT
N3	Process/barrier medium IN
N7/N8	Process/barrier circuit vent
N5	Cooling circuit vent
N6	Cooling water drain

Description	WED2130/A100		WED3110/A100	
	Tubes	Shell	Tubes	Shell
Pressure Equipment Directive	PED		PED	
Design pressure[1)]	16 bar (232 PSI)	130 bar (1,885 PSI)	16 bar (232 PSI)	110 bar (1,595 PSI)
Design temperature[1)]	150 °C (302 °F)		150 °C (302 °F)	
Inlet temperature [2)]	30 °C (86 °F)	65 °C (149 °F)	30 °C (86 °F)	65 °C (149 °F)
Flow quantity (m^3/h)[2)]	1	approx. 0.5	6	approx. 3
Volume (liters)	0.23	1.4	0.75	1.8
Cooling surface[2)]	0.2		0.6	
Cooling capacity (kW)[*)]	6		36	
Net weight (approx.)	14 kg (31 lb)		24 kg (53 lb)	
Metal parts	1.4571		1.4571	
O-Rings	Viton®		Viton®	
Gaskets	PTFE		PTFE	
Screws	Stainless steel A4-70		Stainless steel A4-70	

Other versions on request.
1) These values are based on the calculation of strength.
2) These values are based on the calculation of heat.
*) Related to water on both sides

WE

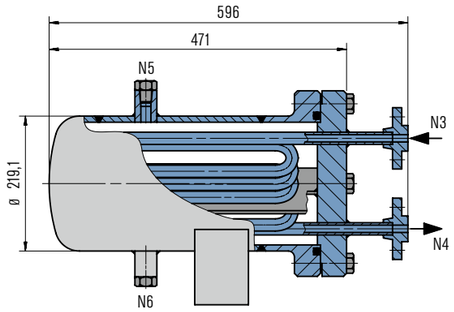

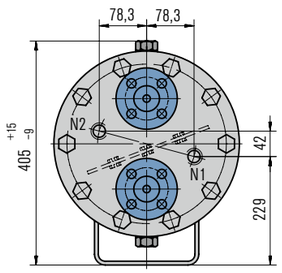

Features

Heat exchangers of the WE range are used to cool process/barrier fluids in seal supply circuits. WE heat exchangers are available in two standard sizes and are API 682 conform. The process/barrier medium is directed through the tube and the cooling medium through the shell.

For simple draining or venting of the cooling water side, the heat exchanger can also be supplied with ventilation/drainage ball valves. In addition, the heat exchangers can also be combined with a temperature instrument in the supply line to the mechanical seal (optional in accordance with API 682).

Circulation in accordance with API 682/ISO 21 049: Plan 21, Plan 22, Plan 23, Plan 41

Advantages

- Operating limits up to 45 bar/260 °C (tube side): suitable for a wide range of demanding operating conditions.
- Heat exchanger can be dismantled: for optimum and simple cleaning of the tubes
- Cooling water side and process side can be completely vented and drained
- 1.4404 stainless steel: high resistance to corrosive media

Standards and approvals

- PED 97/23 EC (Design and production in accordance with EU Pressure Equipment Directive)
- ASME VIII, Div. 1 (Design, calculation and production)

Recommended applications

- Chemical industry
- Petrochemical industry
- Oil and gas industry
- Refining technology

Notes

Cleaning:
Cooling water side: the area around the tubes can be cleaned mechanically after the housing is removed.
Process/barrier medium side: flush with a suitable solvent.

Designation	WE6045/A002		WE6045/A001		WE6045/M014-D0		WE6045/M015-D0		WE6045/M016-D0		WE6045/M017-D0	
	Tube	Shell	Tube	Shell	Tube	Shell	Tube	Shell	Tube	Shell	Tube	Shell
Pressure Equipment Directive	ASME		ASME		ASME		ASME		ASME		ASME	
For shaft diameters ≤ 60 mm (acc. to API 682)	■				■				■			
For shaft diameters > 60 mm (acc. to API 682)			■				■				■	
Ball valve for draining on the cooling water side						■		■		■		■
Connections	1/2" flange	1/2 NPT	3/4" flange	3/4 NPT	1/2" flange	1/2 NPT	3/4" flange	3/4 NPT	1/2 NPT	1/2 NPT	3/4 NPT	3/4 NPT
Design pressure[1)]	45 bar (653 PSI)	16 bar (232 PSI)	45 bar (653 PSI)	16 bar (232 PSI)	45 bar (653 PSI)	16 bar (232 PSI)	45 bar (653 PSI)	16 bar (232 PSI)	45 bar (653 PSI)	16 bar (232 PSI)	45 bar (653 PSI)	16 bar (232 PSI)
Design temperature[1)]	260 °C (500 °F)	150 °C (302 °F)	260 °C (500 °F)	150 °C (302 °F)	260 °C (500 °F)	150 °C (302 °F)	260 °C (500 °F)	150 °C (302 °F)	260 °C (500 °F)	150 °C (302 °F)	260 °C (500 °F)	150 °C (302 °F)
Cooling capacity (kW)[*)]	4		6		4		6		4		6	
Metal parts	1.4404		1.4404		1.4404		1.4404		1.4404		1.4404	
O-Rings	Viton®		Viton®		Viton®		Viton®		Viton®		Viton®	
Screws	Stainless steel A4-70		Stainless steel A4-70		Stainless steel A4-70		Stainless steel A4-70		Stainless steel A4-70		Stainless steel A4-70	

Other versions on request.
1) These values are based on the calculation of strength.
*) Related to water on both sides

WEL1000

Features

Heat exchangers of the WEL1000 range are used to cool process/barrier fluids in seal supply circuits. The heat exchangers are made of straight, laser-welded finned tubes. The cooling medium is ambient air. It is important, therefore, for WEL heat exchangers to be installed in well ventilated places indoors or, ideally, outdoors. There is a choice of two different basic versions of the WEL1000 range (1 or 2 tubes), supplied fully assembled along with valves, base frame and other system components.

Circulation in accordance with API 682/ ISO 21 049: Plan 21, Plan 22, Plan 23, Plan 41

Advantages

- Welded finned tubes without gaps for guaranteed optimum energy transmission
- Universal usage: high-quality 1.4571 stainless steel finned tube design
- No cooling water connection or heating required for the cooling water pipe in winter
- There is a choice of two different basic versions

Standards and approvals

- PED 97/23 EC (Design and production in accordance with EU Pressure Equipment Directive)
- ASME VIII, Div. 1 (Calculation)

Recommended applications

- Chemical industry
- Petrochemical industry
- Oil and gas industry
- Refining technology
- Power plant technology

Notes

WEL heat exchangers should be installed in well ventilated places indoors or, ideally, outdoors. Vertical installation is essential.

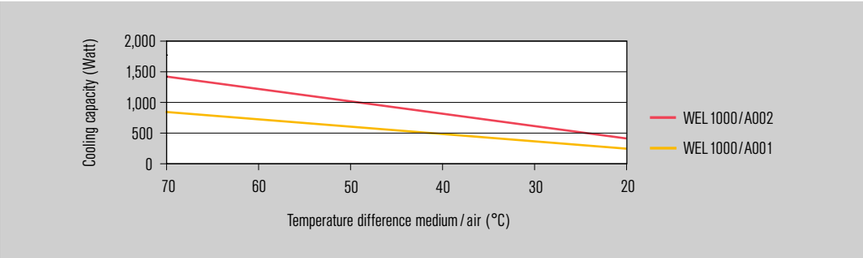

Cooling capacity: Values based on moved air at min. 0.7 m/s.

Designation	WEL1000/A001	WEL1000/A002
Pressure Equipment Directive	PED	PED
Number of finned tubes	1	2
Connections	G1/2"	G1/2"
Allowable pressure[1)]	110 bar (1,595 PSI)	110 bar (1,595 PSI)
Allowable temperature[1)]	200 °C (392 °F)	200 °C (392 °F)
Volume (liters)	0.7	1.4
Parts in contact with the medium	1.4571	1.4571

Other versions on request.

[1)] These values are based on the calculation of strength.

WEL2000

Features

Heat exchangers of the WEL2000 range (shown above: WEL2001/A040) are used to cool process/barrier fluids in seal supply circuits. The heat exchangers are made of helical, laser-welded finned tubes. The cooling medium is ambient air. It is important, therefore, for WEL heat exchangers to be installed in well ventilated places indoors or, ideally, outdoors. There is a choice of three different basic versions of the WEL2000 range, supplied fully assembled along with valves, base frame and other system components.

Circulation in accordance with API 682/ ISO 21 049: Plan 21, Plan 22, Plan 23, Plan 41

Advantages

- Helical finned tube design with vertical arrangement of the fins to the wind direction: the solution for high cooling capacities
- Welded finned tubes without gaps for guaranteed optimum energy transmission
- Universal usage: high-quality 1.4571 stainless steel finned tube design
- No cooling water connection or heating required for the cooling water pipe in winter
- There is a choice of three different basic versions

Standards and approvals

- PED 97/23 EC (Design and production in accordance with EU Pressure Equipment Directive)
- ASME VIII, Div. 1 (Calculation)

Recommended applications

- Chemical industry
- Petrochemical industry
- Oil and gas industry
- Refining technology
- Power plant technology

Notes

WEL heat exchangers should be installed in well ventilated places indoors or, ideally, outdoors. Vertical installation is essential.

Product variants

WEL2001/A010 2 finned tubes switched on parallel

WEL2002/A003 2 finned tubes switched in parallel and double length

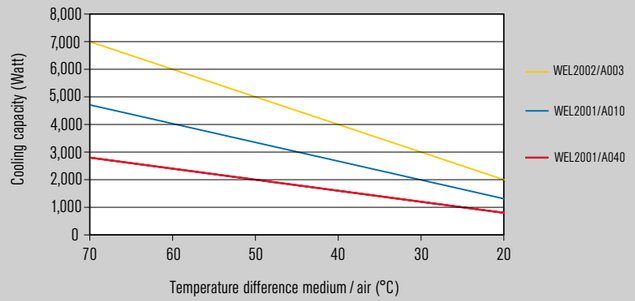

Cooling capacity: Values based on moved air at min. 0.7 m/s.

Designation	WEL2001/A040	WEL2001/A010	WEL2002/A003
Pressure Equipment Directive	PED	PED	PED
Number of finned tubes	1	2 finned tubes switched in parallel	2 finned tubes switched in parallel and doubled length
Connections	G1/2"	G1/2"	G1/2"
Allowable pressure[1)]	110 bar (1,595 PSI)	110 bar (1,595 PSI)	110 bar (1,595 PSI)
Allowable temperature[1)]	200 °C (392 °F)	200 °C (392 °F)	200 °C (392 °F)
Volume (liters)	1.7	3.4	6.8
Parts in contact with medium	1.4571	1.4571	1.4571

Other versions on request.

[1)] These values are based on the calculation of strength.

LS050 (Plan 65)

Features

The EagleBurgmann leakage control systems of the LS050 range in accordance with API Plan 65 consist of a leakage collection tank with integrated orifice and overflow pipe along with two shut-off valves. The level can be monitored with the a level switch.

Circulation in accordance with API 682/ ISO 21 049: Plan 65

Advantages

- Innovative design: orifice and overflow pipe integrated in the vessel
- No need for extra pipe work for the overflow pipe
- Low space requirements because of compact design
- Integrated level monitoring for reliable operation

Functional description

The LS050 leakage control system in accordance with API Plan 65 is used to discharge leakage from single seals. The outboard leakage is collected in an external tank; the leakage volume is monitored (level in the tank).

Standards and approvals

- PED 97/23 EC (Design and production in accordance with EU Pressure Equipment Directive)
- ASME VIII, Div. 1 (Design, calculation and production)

Recommended applications

- Refining technology
- Oil and gas industry
- Petrochemical industry
- Chemical industry

Designation	LS050/M004-D0	LS050/M006-D0
Pressure Equipment Directive	PED	PED
Volume, vessel (liters)	3	3
Allowable pressure[1)]	50 bar (725 PSI)	50 bar (725 PSI)
Allowable temperature[1)]	0 °C ... +80 °C (32 °F ... +176 °F)	0 °C ... +80 °C (32 °F ... +176 °F)
Metal parts	1.4571	1.4571
Connection	1/2 NPT	Flange 1/2"
Level monitoring	LS-H	LS-H

Other versions on request.
[1)] Design data, permissible working values depend on the actual conditions of service

LS050 (Plan 75)

Features

The EagleBurgmann leakage control systems of the LS050 range in accordance with API Plan 75 consist of a leakage collection tank with sight-glass and can be equipped with a wide range of measuring instruments.

Circulation in accordance with API 682/ ISO 21 049: Plan 75

Advantages

- Leakage collection tank with sight-glass
- Modular system: combination with a wide range of monitoring instruments possible

Functional description

The LS050 leakage control system in accordance with API Plan 75 is used to discharge leakage from liquid-lubricated single seals with downstream safety gas seals where the leakage is liquid under atmospheric conditions.

Standards and approvals

- PED 97/23 EC (Design and production in accordance with EU Pressure Equipment Directive)
- ASME VIII, Div. 1 (Design, calculation and production)

Recommended applications

- Refining technology
- Oil and gas industry
- Petrochemical industry
- Chemical industry

Desigantion	LS050/M001-D0
Pressure Equipment Directive	ASME
Volume, vessel (liters)	14
Allowable pressure[1)]	50 bar (725 PSI)
Allowable temperature[1)]	–20 °C ... +120 °C (–4 °F ... +248 °F)
Metal parts	1.4571
Seal	T2, Burasil®, Viton®

Other versions on request.
[1)] Design data, permissible working values depend on the actual conditions of service

SP23 (Plan 76)

Features

The EagleBurgmann leakage control systems of the SP23 range in accordance with API Plan 76 consist of an orifice, valves and instruments for pressure monitoring.

Circulation in accordance with API 682/ ISO 21 049: Plan 76

Advantages

- Reliable mode of operation: system supplied fully preassembled with orifice, valves, a pressure gauge (PI) and a pressure switch (PS-H)

Functional description

The SP23 leakage control system in accordance with API Plan 76 is used to discharge leakage from liquid-lubricated single seals with downstream safety gas seals where the leakage is gaseous under atmospheric conditions.

Recommended applications

- Refining technology
- Oil and gas industry
- Petrochemical industry
- Chemical industry

Designation	SP23-228-D0
Allowable pressure[1)]	50 bar (725 PSI)
Allowable temperature[1)]	0 °C ... +80 °C (32 °F ... +176°F)
Metal parts	1.4571

Other versions on request.

[1)] Design data, permissible working values depend on the actual conditions of service

FLC200

Features

The FLC200 is an economical sealing water management solution for reducing operating costs through minimized rates of fresh water and waste water. The FLC200 series is available in 3 basic versions:
FLC200: for single mechanical seals with flush
FLC200Q: for mechanical seals with quench
FLC200D: for double mechanical seals

These 3 basic types are available for 5 different indicated flow ranges and with numerous system components (e. g. mounting supports, stands, hoses, alarm sensors, etc.) and other material combinations.

Circulation in accordance with API 682/ ISO 21 049: Plan 32, Plan 62

Advantages

- Economical supply system
- Optimized sealing water management
- Reduced costs for fresh water and waste water
- Easy operation and cleaning even during operation
- Compact and robust design
- Safe operation even in case of pressure changes
- Quick detection of seal failures

Functional description

The FLC200 flow control unit is designed to enable easy adjustment of the rate of sealing water (flush, quench or buffer water) on rotary machines to the optimum and lowest level of water consumption necessary for the seal's safe operation. Key parameters such as pressure and flow can be permanently monitored for early detection of any malfunctions. The buffer medium is supplied by an external system.

Operating range

Max. operating pressure: 25 bar (363 PSI)
Max. operating temperature: 85 °C (185 °F)
Indicated flow range (pressure drop):
0.5 ... 4 l/min. (2 bar at 4 l/min.)
1 ... 8 l/min. (2.8 bar at 8 l/min.)
4 ... 15 l/min. (2.7 bar at 15 l/min.)
8 ... 20 l/min.
10 ... 30 l/min. (6 bar at 30 l/min.)

Recommended applications

- Pulp and paper industry

Designation	FLC208-10-00	FLC208Q-00	FLC208D-10-00
Pressure gauge	■		■
Pressure control valve			■
Flow rate (l/min.)	1 ... 8	1 ... 8	1 ... 8
Allowable pressure	10 bar (145 PSI)		10 bar (145 PSI)
Allowable temperature	85 °C (185 °F)	85 °C (185 °F)	85 °C (185 °F)
Accuracy	±5 %	±5 %	±5 %
Housing material	POM	POM	POM
Metal parts	AISI 316 AISI 304	AISI 316 AISI 304	AISI 316 AISI 304
Sight-glass	Grilamid TR 55	Grilamid TR 55	Grilamid TR 55
Seals	FPM	FPM	FPM
Connections	Hose nozzles for 10 mm hose	Hose nozzles for 10 mm hose	Hose nozzles for 10 mm hose

Other versions on request.

BestFlow® Barrier fluid valve

Features

The EagleBurgmann BestFlow® is a temperature-controlled "money-saving valve" for double seals on which the barrier water connection extends directly into the seal chamber, e. g. Cartex-DN.

Advantages

- Reduced, minimum barrier water consumption depending on the seal temperature
- Easy installation and use: no additional connection lines needed
- Venting in horizontal and vertical mounting position
- Long-term assurance of the functionality of the expansion element thanks to its physical and chemical properties
- Rugged, fatigue-free moving parts
- No temperature peaks during opening and closing of the valve thanks to the thermosensitive expansion element
- No power supply required (Ex-protection)
- Pressure-balanced component; pressure fluctuations have no effect on the BestFlow®; controlled solely via temperature

Functional description

EagleBurgmann BestFlow® controls the buffer water flow via a thermosensitive expansion element. If the temperature in the seal increases above the permitted value, the valve will open automatically. More fresh, cool buffer water can then flow into the seal chamber. As soon as the seal or the barrier fluid has cooled down, the valve closes and the flow is stopped. This ensures that an exchange of barrier medium only takes place when cooling of the seal is required. This results in enormous savings in terms of water consumption, without any compromise in terms of operational reliability and safety. Temperature control for double seals, which are operated in the non-flow mode.

Recommended applications

- Pulp and paper industry
- Water and waste water technology
- Chemical industry

Notes

Temperature control for double seals, which are operated in the non-flow mode.

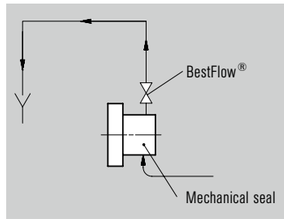

Installation diagram for a BestFlow® valve

Designation	BestFlow®-3/8NPT-60	BestFlow®-3/8NPT-82	BestFlow®-R3/8"-60	BestFlow®-R3/8"-82
$t_{3\ out}$	60 °C (140 °F)	82 °C (180 °F)	60 °C (140 °F)	82 °C (180 °F)
$p_{3\ max}$	16 bar (232 PSI)	16 bar (232 PSI)	16 bar (232 PSI)	16 bar (232 PSI)
$p_3 - p_1 = \Delta p$	min. 2 bar (29 PSI)	min. 2 bar (29 PSI)	min. 2 bar (29 PSI)	min. 2 bar (29 PSI)
Connection	3/8 NPT	3/8 NPT	R3/8	R3/8
Metal parts	1.4571 Brass	1.4571 Brass	1.4571 Brass	1.4571 Brass
Seal	Viton® or EPDM	Viton® or EPDM	Viton® or EPDM	Viton® or EPDM

Other connection dimensions on request.

4 SPU Circulation pumps

Features

The SPU circulating pump (shown above: SPU5000) is used for circulating the buffer/barrier fluid in seal supply systems (to increase the cooling capacity). The SPU is suitable for water and other liquids of similarly low viscosity. The SPU is available in 4 basic versions:
SPU1010: without explosion protection
SPU2040: with mechanical seal, with magnetic coupling as an option, ATEX conform
SPU2063: with mechanical seal, with magnetic coupling as an option, ATEX conform
SPU5000: sealless pump, ATEX conform

Advantages

- SPU5000: sealless pump, hermetically sealed and maintenance-free
- SPU2040, SPU2063 and SPU5000 ATEX conform

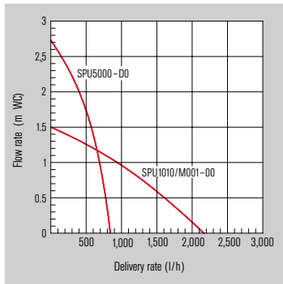

Pumping characteristic with water as medium

Recommended applications

- Petrochemical industry
- Chemical industry
- Oil and gas industry
- Refining technology
- Food and beverage industry
- Pharmaceutical industry

Product variant

SPU1010

Designation	SPU1010/M001-00	SPU2040/A006-00	SPU2040/A097-D0	SPU2063/A001-00	SPU2080/A002-D1	SPU5000-D0
Type of seal	Sealless	Mechanical seal	Magnetic coupling	Mechanical seal	Magnetic coupling	Magnetic coupling
Max. allowable viscosity (mm²/s)	10	100	100	100	100	15
Max. working pressure	10 bar (145 PSI)	40 bar (580 PSI)	40 bar (580 PSI)	63 bar (914 PSI)	80 bar (1,160 PSI)	40 bar (580 PSI)
Max. working temperature	110 °C (230 °F)	150 °C (302 °F)	200 °C (392 °F)	150 °C (302 °F)	130 °C (266 °F)	100 °C (212 °F)
Ingress protection	IP 42	IP 55	IP 65	IP 54	IP 55	IP 65
Explosion protection		Ex e II T3	Ex e II T3	Ex e II T3	Ex de II C T 4	Ex d II C T 4
Supply voltage	400 V/50 Hz	230/400 V/50 Hz	230/400 V/50 Hz	230/400 V/50 Hz	400 V/50 Hz	230/400 V/50 Hz
Power consumption (W)	75	250	250	370	1,100	120
Weight	2.1 kg (4.6 lb)	8 kg (17.6 lb)	8 kg (17.6 lb)	10 kg (22 lb)	22 kg (48.5 lb)	8 kg (17.6 lb)
Material	1.4301	1.4571/Viton®	1.4571/FEP	1.4571/Viton®	1.4571/FKM	1.4401/1.4462/1.4571/ Viton®/2/IGLIDUR H370

Circulation units with higher performance characteristics or for other media or viscosities on request.

HPS Screw pumps 4

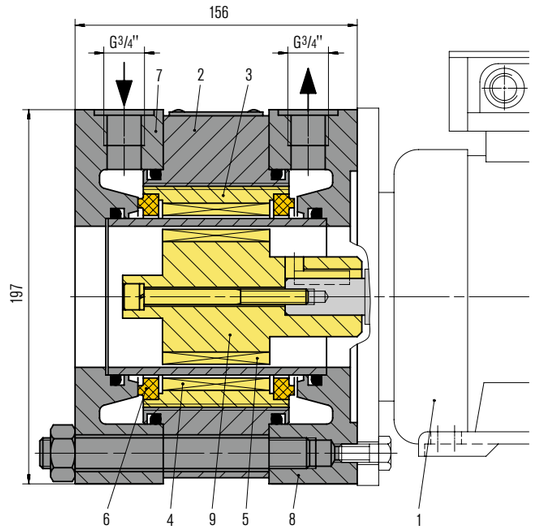

Features

Screw pumps of the HPS range are canned pumps. Their ideal area of application is closed high-pressure circuits within hydraulic process engineering systems. Here the HPS represents a genuine, low-price alternative to the centrifugal pump without stuffing box. HPS pumps are not self-priming, so the pump circuit must be well vented.
HPS4100: screw pump for a max. permissible operating pressure of 100 bar
HPS4200: screw pump for a max. permissible operating pressure of 200 bar

Advantages

- Canned pump: hermetically sealed and requires by and large no maintenance
- For operating pressures of up to max. 100 resp. 200 bar
- Carbon graphite axial and radial bearings: with the pump in operation they are extensively relieved by hydrodynamic centering of the pumping screw and pumping sleeve
- Small overall size

Recommended applications

- Petrochemical industry
- Chemical industry
- Oil and gas industry
- Refining technology
- Food processing industry
- Pharmaceutical industry

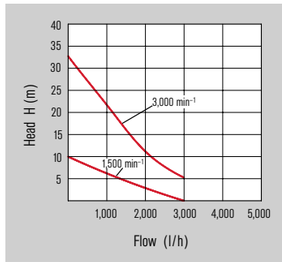

Pumping characteristic with water as medium

Item	Description
1	Three-phase AC motor
2	Pumping sleeve, stationary
3	Pumping screw, rotating
4	Magnet pump rotor
5	Solenoid actuator
6	Sliding bearing
7	Housing cover plate
8	Housing flange
9	Shaftelectric soft-start device.

Notes

For media with higher viscosities than water, it may be necessary to use an electric soft-start device.
For screw pumps with a rotational speed of 3,000 min^{-1} always an electric soft-start device is necessary.

Designation	HPS4100/M001-00	HPS4200/M001-00
Max. allowable viscosity (mm²/s)	< 100	< 100
Max. working pressure	100 bar (1,450 PSI)	200 bar (2,901 PSI)
Max. working temperature	100 °C (212 °F)	100 °C (212 °F)
Speed (min^{-1})	1,500	1,500
Ingress protection	IP 54	IP 55
Type of explosion protection	Ex e	Ex de
Supply voltage	220/380 V/50 Hz	380 V/50 Hz
Power consumption (W)	550	1,100

Screw pumps with a rotational speed of 3,000 min^{-1} and other versions on request.

ZY Cyclone separators

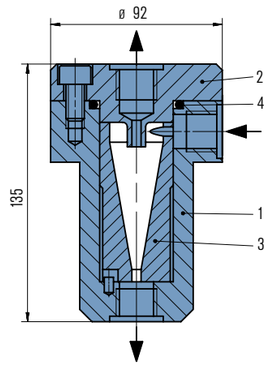

ZY61

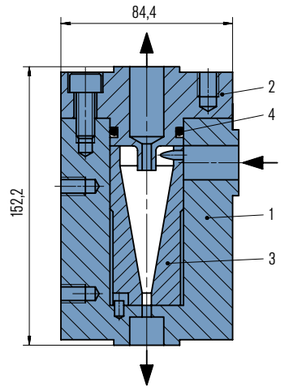

ZY61 in block-type design

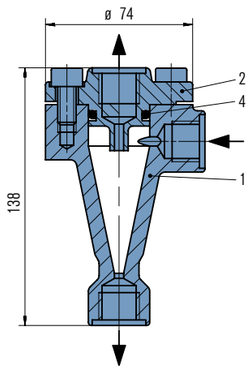

ZY62

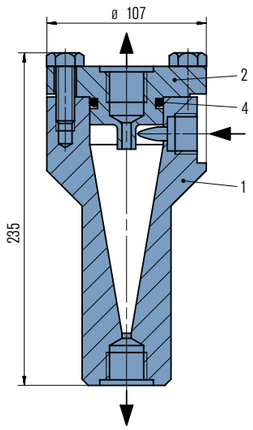

ZY203

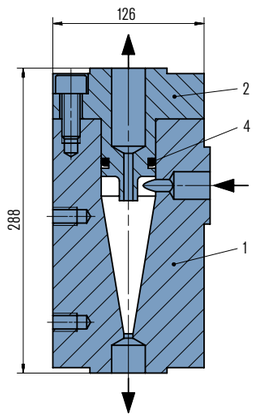

ZY203 in block-type design

Features

The ZY range (shown above: ZY62) is available in 3 basic versions:
ZY61: cyclone separator with replaceable insert made of elastomer or ceramic
ZY62: cast version of the cyclone separator
ZY203: cyclone separator for high flow rates and high pressures

Circulation in accordance with API 682/ ISO 21 049: Plan 31, Plan 41

Advantages

- Dirt is automatically conveyed to the suction nozzle of the pump: maintenance-free mode of operation for guaranteed reliability
- High filtration efficiency
- Wide range of products for the optimum solution for every application
- ZY203: for operating pressures of up to 200 bar
- ZY61, ZY203 optional in block-type design with integrated flange connections: low space requirements because of compact design

Functional description

Cyclone separators of the ZY range are used to clean mainly aqueous liquids containing dirt and solids (e.g. in circulation systems of sewage, sludge or pipeline pumps). The best possible filtration efficiency is achieved when the specific weight of the solids is much higher than that of the carrier liquid, and when the differential pressure is as large as possible within the permissible pressure range (min. 1.7 bar in accordance with API 682). The viscosity of the medium is also a factor that needs to be taken into account.

Recommended applications

- Water and waste water technology
- Petrochemical industry
- Chemical industry
- Oil and gas industry
- Refining technology

Item	Description
1	Housing
2	Cover
3	Insert
4	O-Ring

Product variant

ZY203 with flange connections

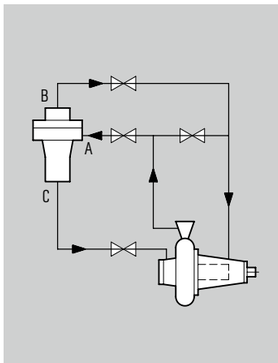

Operating and installation diagram for a cyclone separator.

The cyclone separator must always be installed in the vertical position. The pressure at the outlets (C) and (B) must be lower than at the inlet (A). Cleaned liquid is conveyed to the top (B) and the separated dirt to the suction port of the pump.

Designation	Insert	Allowable pressure[1)]	Allowable temperature[1)]	Connections	Connection size	Housing, cover	O-Ring
ZY61	Ceramic	64 bar (928 PSI)	125 °C (257 °F)	G, R, NPT, Flange	1/2"	1.4571	Viton®
ZY61	Elastomer	64 bar (928 PSI)	60 °C (140 °F)	G, R, NPT, Flange	1/2"	1.4571	Viton®
ZY61 in block-type design	Ceramic	42 bar (609 PSI)	93 °C (199 °C)	Flange	1/2", 3/4"	1.4462	Viton®
ZY62		64 bar (928 PSI)	125 °C (257 °F)	G, R, NPT, Flange	1/2" , 3/4"	1.4408	Viton®
ZY203		200 bar (2,901 PSI)	125 °C (257 °F)	G, R, NPT, Flange	3/4", 1"	1.4571	Viton®
ZY203 in block-type design		233 bar (3,379 PSI)	50 °C (122 °F)	Flange	3/4"	1.4404	Viton®

Other versions on request.
1) Max. permissible working values depend on version.

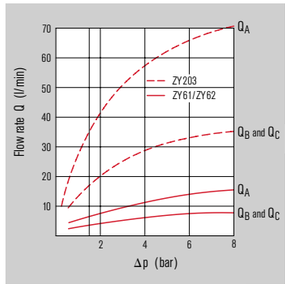

Flow rates for water as medium.

MAF203 Magnetic filter

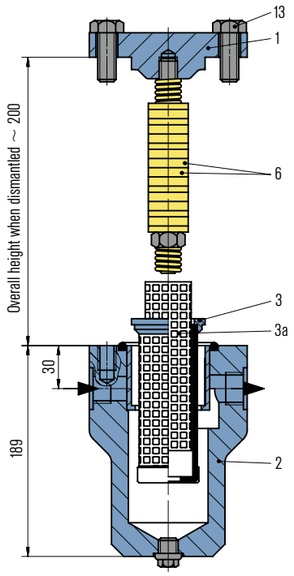

Features

Magnetic filters of the MAF203 range are inline filters for installation inside pipelines. The combination of magnetic rod and filter element guarantees a high level of efficiency. Magnetic filters are used in seal supply systems and any other such systems in which a liquid has to be cleaned of magnetic and non-magnetic impurities up to a certain size.

Advantages

- For operating pressures of up to 200 bar
- Combination device: magnetic filter and filter element in one
- Internal mesh to protect the filter element for reverse currents
- Housing can be dismantled: simple maintenance and cleaning
- Magnetic rod is of short overall height when dismantled: low space requirements for maintenance work

Item	Description
1	Cover
2	Filter Cover
3	Sleeve
3a	Internal mesh
6	Ring magnet
13	Hex screw

Functional description

The magnetic rod is positioned in the filter in such a way that it catches magnetic particles flowing past in the water on all sides. Partial coarse filtration is provided by the incorporated filter element.

Recommended applications

- Petrochemical industry
- Chemical industry
- Power plant technology
- Refining technology
- Oil and gas industry

Designation	Connection	Allowable pressure	Allowable temperature	Filter grade	Weight (approx.)	Housing, cover	Filter element[1)]	O-Ring	Gasket
MAF203/G1/2-00	G 1/2"	200 bar (2,900 PSI)	150 °C (302 °F)	50 µm	10.5 kg (23 lb)	1.4571	1.4301	Viton®	T2
MAF203/G3/4-00	G 3/4"	200 bar (2,900 PSI)	150 °C (302 °F)	50 µm	10.5 kg (23 lb)	1.4571	1.4301	Viton®	T2
MAF203/G1-00	G 1"	200 bar (2,900 PSI)	150 °C (302 °F)	50 µm	10.5 kg (23 lb)	1.4571	1.4301	Viton®	T2
MAF203/1/2NPT-00	1/2 NPT	200 bar (2,900 PSI)	150 °C (302 °F)	50 µm	10.5 kg (23 lb)	1.4571	1.4301	Viton®	T2
MAF203/3/4NPT-00	3/4 NPT	200 bar (2,900 PSI)	150 °C (302 °F)	50 µm	10.5 kg (23 lb)	1.4571	1.4301	Viton®	T2
MAF203/1NPT-00	1 NPT	200 bar (2,900 PSI)	150 °C (302 °F)	50 µm	10.5 kg (23 lb)	1.4571	1.4301	Viton®	T2

1) Other materials on request

MAF2001 Magnetic filter

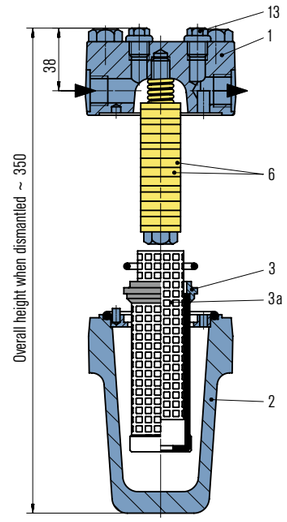

Features

Magnetic filters of the MAF2001 range are inline filters for installation inside pipelines. The combination of magnetic rod and filter element guarantees a high level of efficiency. Magnetic filters are used in seal supply systems and any other such systems in which a liquid has to be cleaned of magnetic and non-magnetic impurities up to a certain size.

Advantages

- Combination device: magnetic filter and filter element
- Internal mesh to protect the filter element for reverse currents
- Venting screws in the filter inlet and outlet can be used as connections for maintenance or differential pressure indicator
- Housing can be dismantled: simple maintenance and cleaning
- Two types of contamination indicator are available as accessories: visual monitoring and/or in combination with an electric contact
- All pressure-loaded parts are forged components

Item	Description
1	Filter cover
2	Filter barrel
3	Element insert
3a	Internal mesh
6	Ring magnet
13	Venting screw

Functional description

The magnetic rod is positioned in the filter in such a way that it catches magnetic particles flowing past in the medium on all sides. Partial coarse filtration is provided by the incorporated filter element.

Recommended applications

- Petrochemical industry
- Chemical industry
- Power plant technology
- Refining technology
- Oil and gas industry

Designation	Connection	Allowable pressure	Allowable temperature[1)]	Filter grade	Weight (approx.)	Housing, filter head	Filter insert, filter element[2)]	O-Ring	Gasket
MAF2001/G1/2-00	G 1/2"	63 bar (913 PSI)	150 °C (302 °F)	50 µm	7.8 kg (17.2 lb)	1.4571	1.4301	Viton®	T2
MAF2001/G3/4-00	G 3/4"	63 bar (913 PSI)	150 °C (302 °F)	50 µm	7.8 kg (17.2 lb)	1.4571	1.4301	Viton®	T2
MAF2001/G1-00	G 1"	63 bar (913 PSI)	150 °C (302 °F)	50 µm	7.8 kg (17.2 lb)	1.4571	1.4301	Viton®	T2
MAF2001/NPT1/2"-00	1/2 NPT	63 bar (913 PSI)	150 °C (302 °F)	50 µm	7.8 kg (17.2 lb)	1.4571	1.4301	Viton®	T2
MAF2001/NPT3/4"-00	3/4 NPT	63 bar (913 PSI)	150 °C (302 °F)	50 µm	7.8 kg (17.2 lb)	1.4571	1.4301	Viton®	T2
MAF2001/NPT1"-00	1 NPT	63 bar (913 PSI)	150 °C (302 °F)	50 µm	7.8 kg (17.2 lb)	1.4571	1.4301	Viton®	T2

1) Higher values on request
2) Other materials on request

MAA Magnetic separators

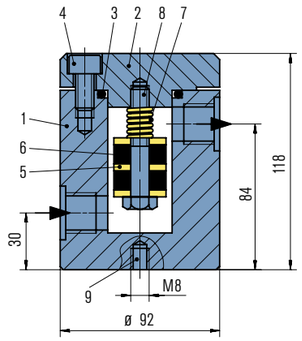

Features

Magnetic separators of the MAA range consist of a pressure casing with integrated magnetic rod. Magnetic separators are used in seal supply systems and any other such systems in which a liquid has to be cleaned of magnetic impurities.

Advantages

- For operating pressures of up to 150 bar
- Housing can be dismantled: simple maintenance and cleaning
- Reliable and rugged technology

Functional description

The magnetic rod is positioned in the casing in such a way that it catches magnetic particles flowing past in the medium on all sides.

Recommended applications

- Petrochemical industry
- Chemical industry
- Power plant technology
- Refining technology
- Oil and gas industry

Item	Description
1, 2	Casing and cover: 1.4571
3	O-Ring: E
4, 8	Screws: A4 – 70 stainless steel
5	Washers: T2
6	Ring magnets: corrosion-resistant
7	Spring: 1.4301
9	Fixing hole

Notes

Cleaning:
The magnetic rod can be removed for cleaning with the casing fitted by opening the cover (with the line depressurized!). Maintenance intervals depend on the degree of soiling. We recommend checking and if necessary cleaning the magnetic rod several hours after using for the first time and each time after flushing the pipes because experience indicates that much of the dirt is flushed out of the pipes at this time.

Designation	Connection	Allowable pressure	Allowable temperature	Volume (liters)	Weight (approx.)	Cover, housing	Spring	O-Ring	Gasket
MAA2120/G1/2-00	G 1/2"	120 bar (1,740 PSI)	160 °C (320 °F)	0.08	5.5 kg (12.2 lb)	1.4571	1.4301	EPDM	T2
MAA2120/1/2NPT-00	1/2 NPT	120 bar (1,740 PSI)	160 °C (320 °F)	0.08	5.6 kg (12.3 lb)	1.4571	1.4301	EPDM	T2
MAA2140/1/2NPT-00	1/2 NPT	140 bar (2,031 PSI)	160 °C (320 °F)	0.08	5.6 kg (12.3 lb)	1.4571	1.4301	EPDM	T2
MAA2150/1/2NPT-D0	1/2 NPT	150 bar (2,176 PSI)	150 °C (302 °F)	0.08	5.6 kg (12.3 lb)	1.4571	1.4301	EPDM	T2
MAA2010/FL1/2/150/A001-D1	Flange 1/2"	10 bar (145 PSI)	100 °C (212 °F)	0.08	7 kg (15.4 lb)	1.4571	1.4301	EPDM	FFKM

Other versions on request.

SP23 Flow meter

Features

Flow meters of the SP23 range are used for checking the amount of fluid used to refill the barrier fluid circuit in closed systems (e. g. SPN1000/3000). The indicated volume equals the amount lost from the circuit through leakage.

Advantages

- For operating pressures of up to 40 bar or 100 bar as standard
- Local indicator with MIN or MAX contacts
- Available with integrated needle valve
- Parts in contact with the medium are made of 1.4571: excellent media resistance for aggressive liquids
- Wide range of applications throughout the processing industry

Recommended applications

- Process industry

Designation	SP23-26	SP23-41	SP23-42	SP23-46
Measuring range				
0.1 ... 1 l/h*)		■	■	
0.4 ... 4 l/h*)	■			■
Proximity contact acc. to NAMUR				
MAX flow	■	■	■	■
Harzardous duty approval				
ATEX Ex ia	■	■	■	■
Control valve				
Needle valve	■	■		
Allowable pressure				
40 bar (580 PSI)	■	■		
100 bar (1,450 PSI)			■	■
Allowable temperature (medium)				
150 °C (302 °F)	■	■	■	■
Material				
Wetted parts	1.4571	1.4571	1.4571	1.4571

Other versions on request.
*) With water as barrier fluid; other media on request

SP23 Pressure gauge

Features

Bourdon pressure gauges of the SP23 range are used for visual monitoring of the operating pressure.

Advantages

- Analog pressure gauge: indicator range up to 16 bar
- Available in sizes NG63 and NG100
- Parts in contact with the medium are made of 1.4571: excellent media resistance for aggressive liquids
- Wide range of applications throughout the processing industry

Recommended applications

- Process industry

Product variant

Version with pressure gauge shut-off valve already fitted

Designation	SP23-092	SP23-094	SP23-095	SP23-097
Pressure range				
0 ... 6 bar				■
0 ... 16 bar	■	■	■	
Size				
NG63	■	■		■
NG100			■	
Pressure gauge shut-off valve				
Without	■			■
With		■	■	
Proximity contact acc. to NAMUR				
MIN pressure			■	
Harzardous duty approval				
ATEX Ex ia			■	
Material				
Wetted parts	1.4571	1.4571	1.4571	1.4571

Please enquire about other measurement ranges, pressure gauges with contacts resp. with already fitted shut-off valves.

SP23 Temperature gauge

Features

The bi-metallic thermometers of the SP23 range are used for visual monitoring of the operating temperature.

Advantages

- Analog temperature gauge: indicator range up to 120 °C
- Available in size NG63
- Parts in contact with the medium are made of 1.4571: excellent media resistance for aggressive liquids
- Wide range of applications throughout the processing industry

Recommended applications

- Process industry

Designation	SP23-093
Temperature range	
0 °C ... +120 °C	■
Size	
NG63	■
Material	
Wettet parts	1.4571

Please enquire about other measurement ranges and about thermometers with contacts.

SPI Measuring unit

Features

The measuring unit of the SPI range is used for visual monitoring of the operating temperature and the operating pressure. The measuring unit consists of a pressure gauge (NG100) with a gauge shut-off valve in accordance with DIN 16270, a bi-metallic thermometer with protective sleeve, and a connector. The SPI is suitable for deployment with the TS2000, TS4000, TS5000 and DRU2063.

Advantages

- Pressure range up to 100 bar
- Temperature range up to 200 °C
- Pre-assembled measuring unit with pressure gauge shut-off valve for measuring pressure and temperature
- Parts in contact with the medium are made of 1.4571: excellent media resistance for aggressive liquids
- Wide range of applications throughout the processing industry

Recommended applications

- Process industry

Designation	SPI2000	SPI2000/A003	SPI2000/A012	SPI2000/A013	SPI2000/A049	SPI2063	SPI2100/A002
Pressure range							
0 ... 40 bar	■	■	■	■	■		
0 ... 100 bar						■	■
Temperature range							
0 °C ... +120 °C			■				
0 °C ... +200 °C	■	■		■	■	■	■
Proximity switch acc. to NAMUR							
MIN pressure		■	■		■		■
MAX pressure		■					■
MIN temperature		■					
MAX temperature		■	■	■			
Harzardous duty approval							
ATEX Ex ia		■	■	■	■		■
Material/weight							
Wetted parts	1.4571	1.4571	1.4571	1.4571	1.4571	1.4571	1.4571
Net weight (approx.)	2.9 kg (6.4 lb)	2.9 kg (6.4 lb)	2.9 kg (6.4 lb)	2.9 kg (6.4 lb)	2.9 kg (6.4 lb)	2.9 kg (6.4 lb)	2.9 kg (6.4 lb)

Please enquire about other measurement ranges and about pressure gauges and thermometers with contacts.

SPL Level indicator

Features

The tank-top mounted level indicators of the SPL range are used for continuous measuring, indication and monitoring of fluid levels. The level indicator consists of a vertical pipe with an integrated floating ball and a magnet system. The indicator strip can be positioned through 360° and is fixed to the outside of the vertical pipe.

Advantages

- Simple and reliable technology
- Magnet system: level indicator functions even if there is a power failure, as it requires no auxiliary power
- For temperatures of up to 200 °C
- Installed in the vessel from above

Functional description

The level indicator functions by means of a floater and a magnet system. The movable two-color metal plates on the indicator strip on the outside of the vertical pipe are actuated/turned by the magnet system.

Recommended applications

- Process industry

Product variant

Version with **SPK2000** contact unit for limit measurements

Notes

Please quote the density of the buffer fluid when placing your order.

Technical data SPL2000

Designation	SPL2000
Allowable pressure	63 bar (914 PSI)
Allowable temperature	200 °C (392 °F)
Min. density of medium	0.7 g/cm³
Material/weight	
Wetted Parts	1.4571
Floater	Titanium
Net weight (approx.)	5 kg (11 lb)

Technical data SPK2000

Designation	SPK2000/A020	SPK2000/A021	SPK2000/A022
Inductive contact acc. to NAMUR			
MIN level	■		■
MAX level		■	■
Harzardous duty approval			
ATEX Ex ia	■	■	■

SPS Level switch

Features

Level switches of the SPS range are used for monitoring and/or controlling fluid levels in vessels, with alarm and/or control of automatic refill units. The SPS is suitable for deployment with the TS1016/A007, TS2000, TS4000 and TS5000 range.

Advantages

- Monitoring of several levels with a single level switch possible
- Reliable and rugged technology
- For temperatures of up to 250 °C
- Simple installation in the vessel from above
- Wide range of applications throughout the processing industry

Functional description

Level switches of the SPS range function by means of the floating ball principle. Float switches are actuators which are activated when a floating ball is moved by a fluid. The switch consists of a sliding tube with reed contact inserts and a floating ball fitted with a ring magnet on the inside. The floating ball rises when the fluid level in the vessel rises and the magnetic field of the ball actuates a reed contact through the wall of the sliding tube.

Recommended applications

- Process industry

Designation	SPS2000-00	SPS2000/ A002	SPS2000/ A103	SPS2000/ A201	SPS2000/ A202	SPS2000/ A123	SPS2000/ A800	SPS2100/ A101	SPS2100/ A002
Type									
Float switch with 1 reed contact	■			■				■	
Float switch with 2 reed contacts		■			■				■
Float switch with 3 reed contacts			■						
Ultrasonic switch						■			
Float measuring transducer							■		
Switching points									
MIN level	■	■	■	■	■	■		■	■
MIN/MAX level			■						
MAX level		■	■		■				■
Contact/signal function									
Change over switch	■	■		■	■				
Breaker			■					■	■
Norm. 16 mA, alarm 8 mA						■			
4 ... 20 mA							■		
Malfunction									
3.6 or 21 mA						■			
Harzardous duty approval									
Zone 1 (Ex ib II C T4)								■	
Zone 1 (Ex d(e) II C T4-T6)				■	■				
Zone 0 (Ex ia II C T3-T6)	■	■	■			■	■		
Ex – certificate									
Certificate acc. ATEX	■	■	■	■	■	■	■	■	
Allowable pressure (medium)									
30 bar (435 PSI), test pressure 40 bar (580 PSI)	■	■					■		
40 bar (580 PSI), test pressure 52 bar (754 PSI)				■	■				
40 bar (580 PSI), test pressure 60 bar (870 PSI)			■						
100 bar (1,450 PSI), test pressure 130 bar (1,885 PSI)						■		■	■
Allowable temperature (medium)									
120 °C (248 °F)				■	■			■	■
150 °C (302 °F)						■			
180 °C (356 °F)	■	■	■						
250 °C (482 °F)							■		
Min. density of medium									
0.7 g/cm³	■	■	■	■	■		■		
0.4 g/cm³						■		■	■
Material/weight									
Wetted parts	1.4571	1.4571	1.4571	1.4571	1.4571	1.4571	1.4571	1.4571	1.4571
Weight (approx.)	1.7 kg (3.75 lb)	1.7 kg (3.75 lb)	1.7 kg (3.75 lb)	1.7 kg (3.75 lb)	1.7 kg (3.75 lb)	1.7 kg (3.75 lb)	1.7 kg (3.75 lb)	1.7 kg (3.75 lb)	1.7 kg (3.75 lb)

Other versions on request.

SPK Contact unit

Features

The contact unit of the SPK range is used for fluid level monitoring through zero contact magnetic actuation of a contact. The contact unit consists of one or more magnetic elements which transmit the position of the fluid level or of the pressure booster piston rod to the switches without touching. The switches are reed contacts or inductive contacts in accordance with NAMUR.

Advantages

- Simple and reliable technology
- Easy to fit
- Wide range of applications throughout the processing industry

Recommended applications

- Process industry

Designation	SPK2000/A004	SPK2000/A005	SPK2000/A006	SPK2000/A012	SPK2000/A101	SPK2000/A102	SPK2000/A103
Type							
Reed contact	■	■	■		■	■	■
Proximity contact acc. to NAMUR				■			
Contact position							
MIN level	■	■	■	■	■	■	■
Normal level			■				■
MAX level	■		■	■		■	■
Contact function							
Contact breaker	■	■	■				
Flipflop (reversible function)					■	■	■
Ex approval							
ATEX Ex ib				■			
Contact load*)							
Max. 1 A/20 W/150 V	■	■	■				
Max. 0.5 A/12 W/70 V					■	■	■

*) Not in harzardous duty area
With inductive loads, contact protection measures are necessary

GSS Gas supply system

Features

Gas supply systems of the GSS range are specially designed for contact-free operated, gas-lubricated mechanical seals. The gas supplied from the supply network (e. g. air or nitrogen) is regulated/monitored by the GSS in accordance with the requirements of the seals being supplied. The GSS systems are equipped with alarm and/or switch-off points depending on specific safety requirements. Centralized monitoring of the measurement values is also possible on request. The GSS range is available in 2 basic versions:
GSS4012: for operating pressures of up to 12 bar
GSS4016: for operating pressures of up to 16 bar

Circulation in accordance with API 682/ ISO 21 049: Plan 72, Plan 74

Advantages

- Available with a wide range of different instruments
- Safe operation thanks to incorporated pressure regulator with integrated filter
- System mounted on a plate or in housing
- Three variants of the housing version available: painted steel, stainless steel, glass fabric
- Easy wall or rack mounting
- For operating pressures of up to 16 bar

Functional description

Buffered, gas-lubricated mechanical seals may only be used in conjunction with adequately pressurized gas (e. g. from a closed circular nitrogen pipeline provided by the operator). For Plan 74 systems the barrier gas pressure level p_3 must always be higher than the pressure level p_1 of the sealed product, whatever the operational state of the machine. The minimum pressure overlay level (Δp) is specified for the individual seal types.

Main GSS functions:
- Filtering of the buffer and flushing gas
- Pressure monitoring and regulation
- Flow monitoring

Typical tasks for the GSS:
- Buffer/barrier gas supply for double seals
- Gas flushing for single seals
- Gas supply for tandem seals

Product variant

GSS4016/A100 mounted on a plate

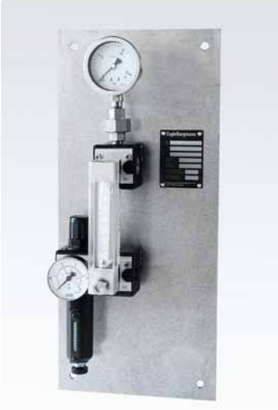

Recommended applications

- Chemical industry
- Petrochemical industry
- Oil and gas industry
- Refining technology
- Pharmaceutical industry
- Food and beverage industry

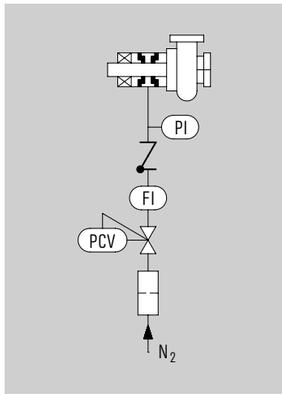

Operating and installation diagram for a GSS system

GSS4016/A1 ... range (system mounted on a plate)

Designation	GSS4016/ A100	GSS4016/ A110	GSS4016/ A101	GSS4016/ A111	GSS4016/ A102	GSS4016/ A112	GSS4016/ A103	GSS4016/ A113
Pressure gauge	PI	PI	PIA L	PIA L	PI	PI	PIA L	PIA L
Flow meter for small range		FI		FI		FI		FI
Flow meter for large range	FI	FI	FI	FI	FIA H	FIA H	FIA H	FIA H

GSS4016/A2 ... range (system in housing)

Designation	GSS4016/ A200	GSS4016/ A210	GSS4016/ A201	GSS4016/ A211	GSS4016/ A202	GSS4016/ A212	GSS4016/ A203	GSS4016/ A213
Pressure gauge	PI	PI	PIA L	PIA L	PI	PI	PIA L	PIA L
Flow meter for small range		FI		FI		FI		FI
Flow meter for large range	FI	FI	FI	FI	FIA H	FIA H	FIA H	FIA H

GSS4016/A3 ... range (system of stainless steel in housing)

Designation	GSS4016/ A300	GSS4016/ A310	GSS4016/ A301	GSS4016/ A311	GSS4016/ A302	GSS4016/ A312	GSS4016/ A303	GSS4016/ A313
Pressure gauge	PI	PI	PIA L	PIA L	PI	PI	PIA L	PIA L
Flow meter for small range		FI		FI		FI		FI
Flow meter for large range	FI	FI	FI	FI	FIA H	FIA H	FIA H	FIA H

GSS4012/A2 ... range (system in housing)

Designation	GSS4012/ A200-D1
Pressure gauge	PIA L
Flow meter for small range	FIA L
Flow meter for large range	FIA H
Preferred system for seal type	AGSZ

Other versions on request.
PI: Pressure gauge
PIA L: Pressure gauge with MIN contact
FI: Flow meter
FIA L: Flow meter with MIN contact
FIA H: Flow meter with MAX contact

SMS Seal management system

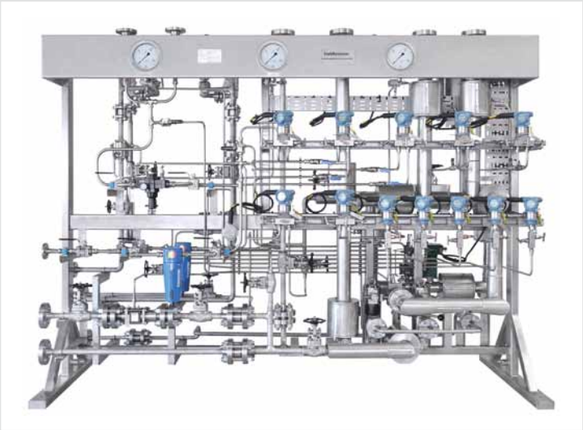

Features

Today, more than 80 % of all process machines in turbo compressor construction are equipped with gas seal systems comprising a gas-lubricated seal and a control system. The seal is buffered with clean and dry flushing/buffer gas to ensure reliable operation. Volumes of leaking gas are monitored, and discharged in a controlled manner. The System can be adapted individually according to the operating conditions and the safety requirements of the application. The SMS performs the following functions:

- Clean gas module: Supply of flushing gas
- Buffer gas module: Supply of buffer gas (N2)
- Leakage module: Monitoring of leakage
- Separation gas module: Supply of separation gas (N2 or air) Monitoring of oil barrier/separation seal

Advantages

EagleBurgmann SMS systems ensure the safe operation of gas-lubricated compressor seals. The system are individually configured in accordance with the seal design and in compliance with the ordinances on hazardous incidents in force and the user's safety aspects. This is simplified by means of a modular design comprising a flushing gas module, a buffer gas module, a leakage discharge module and a separating gas module.

Functional description

To prevent soiling of the sliding faces, gas is drawn from a higher pressure stage of the compressor, is filtered and injected onto the gas seal as clean "flushing gas". The leakage from the first gas seal stage is discharged to the primary vent for disposal. To prevent bearing oil from contaminating the gas seal, a further nitrogen or air buffer ("separating gas") is provided between the bearing side and the gas seal.

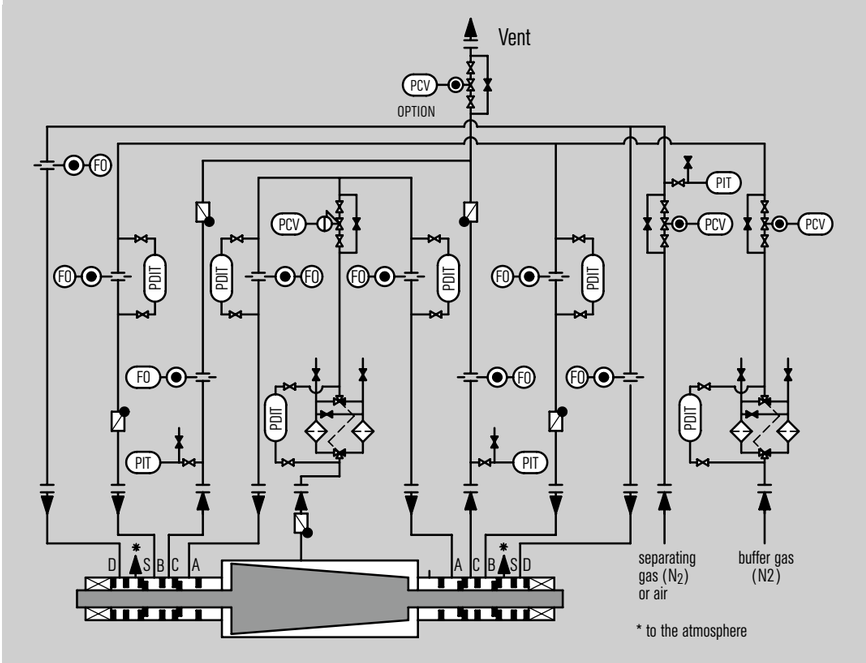

Example of a gas supply system for a tandem gas seal with intermediate labyrinths.

RoTechBooster

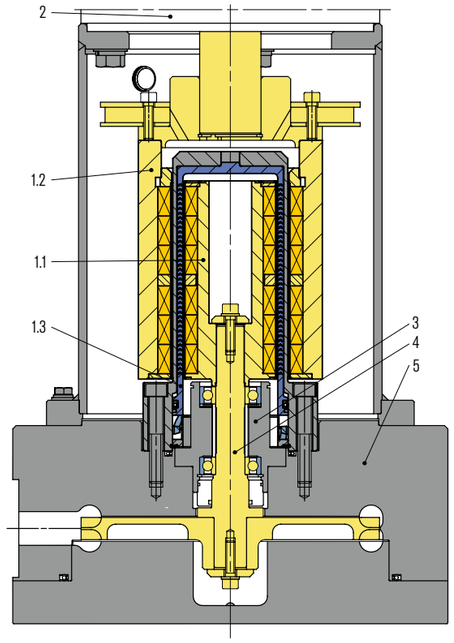

Features

- Centrifugal design. High reliability and availability
- High efficiency magnetic coupling: 95 % less eddy currents, reduced power consumption, reduced heat generation
- High pressure design. 120 bar (1,740 PSI) standard, 1,000 bar (14,500 PSI) on request
- High flow rate. Up to 30 m^3/h (18 ACFM)
- High pressure ratios up to 34 mm (1.35")
- Extended life. 3 – 4 times greater than current boosters (>24,000 h)
- Environmentally safe. No leakage to the atmosphere
- Simple set-up, easy to operate, virtually maintenance free
- Flexible driver systems. Electric motor standard – steam/air optional
- CE/ATEX Certification on request
- Various model available, depending on systems requirements

Item	Description
1.1	Inner rotor
1.2	Outer rotor
1.3	Can
2	Motor
3	Bearing cartridge
4	Impeller
5	Pressure housing

Advantages

- EagleBurgmann's RoTechBooster provides a reliable clean gas flow whenever transient conditions occur. This ensures clean dry gas is provided to the dry gas seals, resulting in the reliability you expect.
- No rubbing shafts or seals and no sliding parts means less parts to maintain.
- Centrifugal solutions are known to be very reliable and eliminate the pulsation in your gas flow
- No oils required for lubrication
- No limitations for lengths of operating times
- Hybrid ceramic bearings and no shaft seals provide reliability and longer maintenance cycles with less contacting parts. This bearings will not require any lubrication, so this eliminates any concerns with lubrication getting into the gas stream.

Functional description

The reliability of gas seals is largely dependent on having a continuous supply of clean and dry flushing gas. In dynamic mode, gas seal support systems take product gas from a higher pressure level in the compressor, filter it and use it to flush the gas seal. This ensures that the gas seal is provided with effective protection against contaminated product gas.
When the compressor is in slow-roll or shut-down mode, however, the lack of flow in the machine means that there is no source of higher pressure gas available. This is where EagleBurgmann RoTechBoosters come into their own. During this phase, which is a highly critical one for the gas seal, the RoTechBooster compresses the filtered flushing gas in the bypass of the clean gas rail of the clean gas panel and supplies it to the seal. This prevents collections of dirt deposits which can be the cause of leaks or even damage. The volume of gas is monitored by a flowmeter.

Recommended applications

- Oil and gas industry
- Refining technology
- Petrochemical industry
- Chemical industry
- Hydrocarbons
- Centrifugal compressors

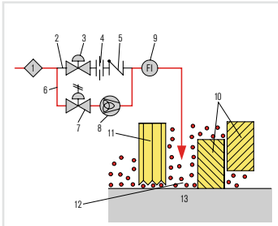

Operating and installation diagram for a RoTechBooster

1	Gas filter module
2	Seal gas supply module
3	PCV
4	Orifice
5	Check valve
6	Seal gas booster module
7	PCV
8	RoTechBooster
9	FI
10	DGS
11	Process side labyrinth
12	Seal gas
13	Shaft

Product variants

RoTechBooster 120-155	RoTechBooster 120-225H	RoTechBooster 120-225L
Impeller type: Single stage, regenerative	Impeller type: Single stage, regenerative	Impeller type: Single stage, regenerative
Speed: 2,400 ... 4,500 min^{-1}	Speed: 1,200 ... 4,200 min^{-1}	Speed: 1,200 ... 4,200 min^{-1}
Design pressure: Vacuum ... 120 bar (1,740 PSI)	Design pressure: Vacuum ... 120 bar (1,740 PSI)	Design pressure: Vacuum ... 120 bar (1,740 PSI)
Design temperature: 200 °C (392 °F)	Design temperature: 200 °C (392 °F)	Design temperature: 200 °C (392 °F)
Motor size: 230/460 V, 3 phase, 15 kW	Motor size: 230/460 V, 3 phase, 15 kW	Motor size: 230/460 V, 3 phase, 15 kW
Weight: 216 kg (475 lb)	Diameter: 410 mm (16.14")	Weight: 325 kg (715 lb)
Diameter: 360 mm (14.17")	Weight: 325 kg (715 lb)	Diameter: 410 mm (16.14")
Height: 960 mm (37.8")	Height: 1,020 mm (40.16")	Height: 1,010 mm (40.16")

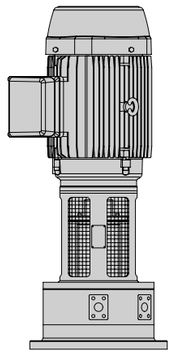

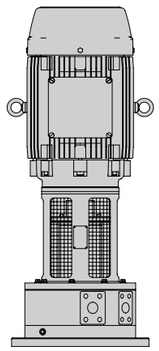

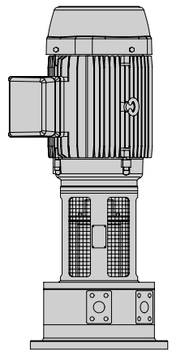

Technical information

5

In this part of the catalog we collected some important and interesting technical information about the mechanical seals section. You can find – besides technical basic information – notes on design, installation and operation and also useful theoretical articles. In case of any queries, please do not hesitate to contact us.

Additional options for agitator seals 259
Axial run-out 268
Balance ratio 260
Barrier medium 269
Circulation Systems to API 682 270
Coatings for sliding faces 263
Code system for agitator seals 259
Code system for API 682 seals 259
Code system for mechanical seals 258
Coefficient of friction 260
Concentricity tolerance 267
Conical spring 267
Cooling water requirements 261
Diamond Faces® 263
Gap width 260
Gas-lubricated seals principle 265
Heat transfer 261
Leakage rate 263
Load factor 260
Mechanical seal installation 268
O-Ring extrusion characteristics 265
Power consumption 262
Pressure vessel regulations 269
Prior to installation 267
Pumping screws 266
Screw locking 268
Seal supply systems 269
Seat locking to EN 12756 264
Shrink disk 267
Sliding pressure 260
Sliding velocity 261
Super-Sinus spring 267
Surface finish 268
Surface roughness 261
Symbols 258
TTV O-Rings 265
Turbulence losses 261
Types of drive 267
Vapor curves 264

Table of materials and material codes:
fold-out page at back cover.

Symbols

A	Area of sliding face
A_H	Area hydraulically loaded by medium pressure
b	Width of sliding face
c	Specific heat capacity
D	Outer diameter of sliding face
d	Inner diameter of sliding face
D_a	Outer diameter of bellows
d_H	Hydraulic diameter
D_i	Inner diameter of bellows
d_m	Mean diameter of sliding face
D_w	Diameter of shaft
f	Coefficient of friction
F_f	Spring force
h	Gap width
H	Delivery head of pumping screw
k	Balance ration
k_1	Pressure gradient factor
n	Speed
p_1	Medium pressure
p_2	Atmosphere pressure
p_3	Buffer fluid pressure
Δp	p_1-p_2; p_3-p_1; p_3-p_2
p_f	Spring pressure
p_G	Sliding pressure
p_r	Calculated load for the frictional force of the secondary seal
P_R	Power consumption of sliding faces
P_V	Turbulence loss through rotating parts
$\dot{V}$	Delivery rate
Q	Mechanical seal leakage rate
R_a	Mean roughness index (calculated)
t,T	Temperature of the medium to be sealed
ΔT	Rise in temperature of the medium to besealed
t_3	Temperature of the buffer medium
v_g	Sliding velocity
η	Dynamic viscosity
κ	Load factor
ρ	Density
ν	Kinematic viscosity

Mechanical seals according to EN 12756 (code system)

For single mechanical seals there is a distinction drawn between standard (N) and short (K) types. For double mechanical seals (back-to-back) EN specifies the short type only.

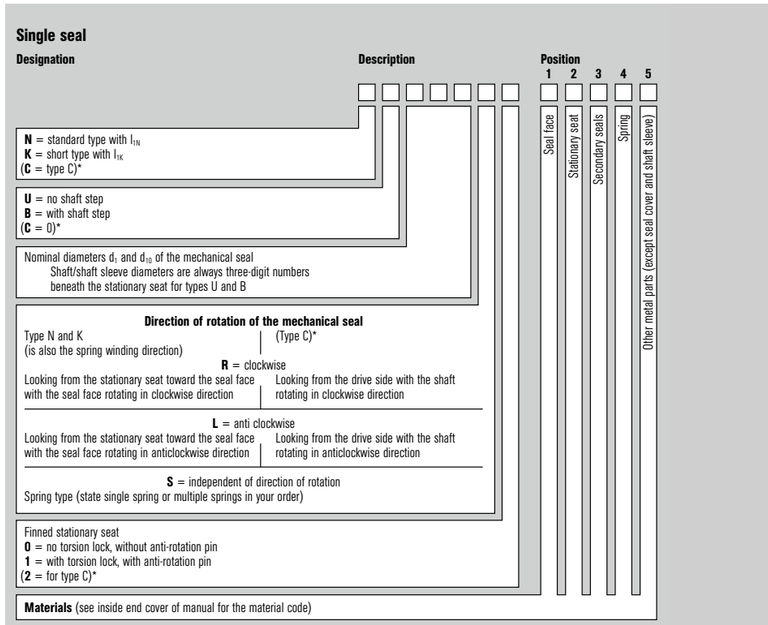

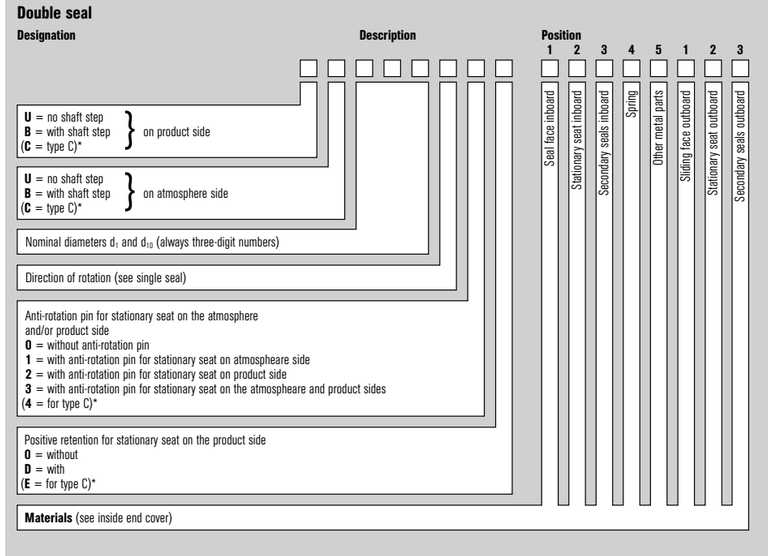

* DIN 24960

Code system for agitator seals to DIN

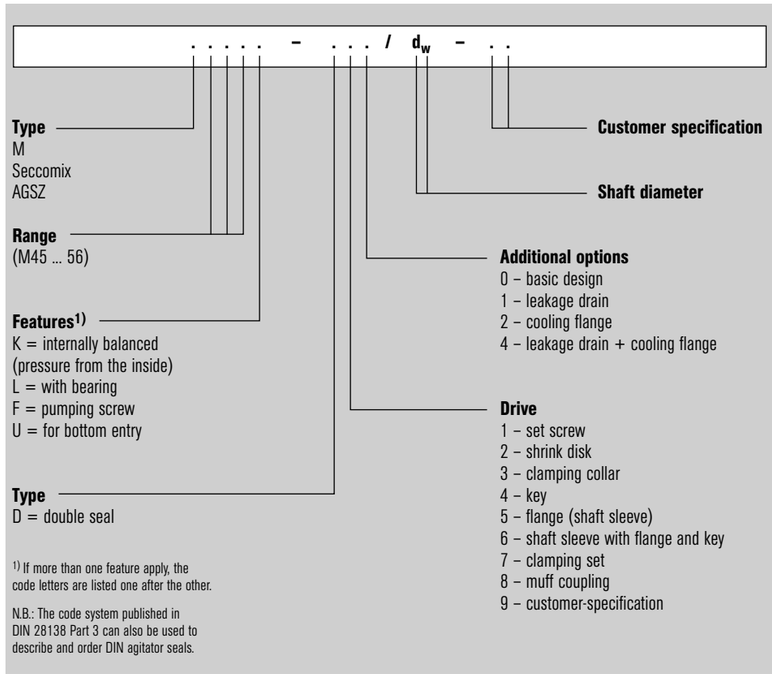

1) If more than one feature apply, the code letters are listed one after the other.

N.B.: The code system published in DIN 28138 Part 3 can also be used to describe and order DIN agitator seals.

Additional options for agitator seals

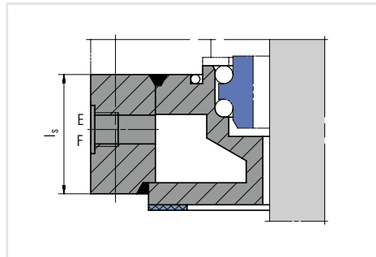

Cooling flange, can be used alternatively as a heating flange ($t_{max.}$ = 350°C (662 °F)).

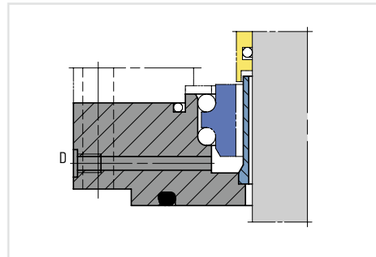

Leakage drain, can be used alternatively as a flush.

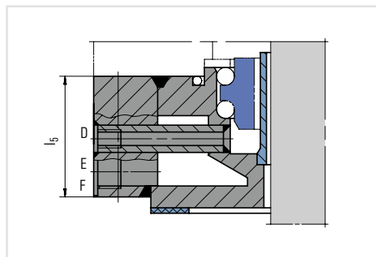

Leakage drain, can be used alternatively as a flush or as a heating flange.

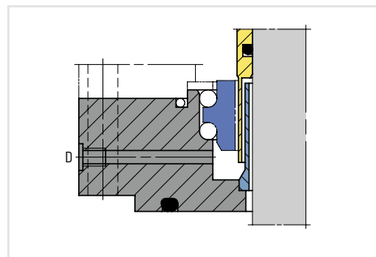

Polymerization barrier, can be used alternatively as a leakage drain or a flush.

Seal and Material Code to API 682/ISO 21049

Seal designations compliant with ISO 21049 1st Issue and API 682 3rd Edition
The seal description was redefined in ISO 21048, Annex D. Contrary to the earlier arrangement, no details such as the face and O-Ring materials used are included in the designation. Such details are now to be found only in the seal data sheet.

The following rule applies for seal codes with four or more digits.

1st digit Seal Category
Here a C is used followed by the corresponding category number 1, 2 or 3 to which the seal belongs.

2nd digit Arrangement
Here an A is used followed by the number 1, 2, or 3 according to the seal arrangement applied.

3rd digit Seal Type
Here the letter A, B or C is used according to the seal in question.

4th digit and other Supply System Plans
The cooling and/or flushing diagrams used are listed here one after the other without separating commas.

Example 1:
C1A1A11
Seal category 1
Seal arrangement 1 (single seal)
Seal type A (O-Ring seal)
Product circulation according to Plan 11.

Example 2:
C3A2B1152
Seal category 3
Seal arrangement 2 (double seal pressureless)
Seal type B (rotating metal bellows seal)
Product circulation according to Plan 11
Pressureless quench according to Plan 52.

Technical information

Balance ratio

The balance ratio is a non-dimensional factor of the mechanical seal and is defined as

$$k = \frac{\text{hydraul. loaded area } A_H}{\text{area of sliding face } A}$$

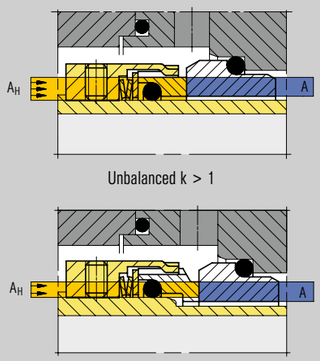

In practice k values are selected between 0.65 and 1.2. With a lower k value, the safety against thermal overload will increase, but the mechanical seal may also lift off more easily.

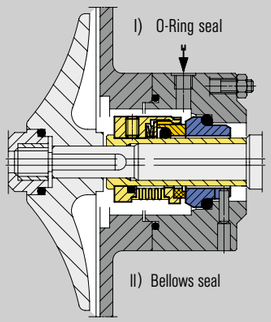

Unlike an O-Ring seal, the hydraulic diameter of a bellows seal is not a fixed geometric value. It is also influenced by the absolute level of the pressure to be sealed and by the direction of pressurization (internal or external pressure).

Sliding pressure p_G

The term "sliding pressure" is understood to be the surface pressure on the two sealing faces which remains after subtracting all those forces that act on the seal face and which are balanced by hydraulic pressures. The sliding pressure is conditional on the pressure differential to be sealed, the balance ratio, the pressure conditions inside the sealing gap i.e.gap between the seal faces (pressure gradient factor) and the spring pressure. The pressure gradient factor k_1 can assume values between 0 and 1, depending on the geometry of the two sealing faces.

For sealing gap geometries which converge in leakage direction – V-gap for externally pressurized seals – the value of k_1 is > 0.5, while for sealing gap geometries which diverge in leakage direction – A-gap for externally pressurized seals – the value of k_1 < 0.5. For simplified calculations the value of k_1 is generally taken to be 0.5. Under unfavourable conditions the sliding pressure can become negative, causing the sealing faces to open resulting in excessive leakage.

$$p_G = \Delta p \cdot (k - k_1) + p_f$$

Coefficient of friction f

The coefficient of friction f is conditional on the materials that are in contact, the medium being sealed, the sliding velocity and the design-related conditions of contact between the sliding faces. For general considerations and calculations, a coefficient of friction of between 0.05 and 0.08 can be applied as a good approximation. As can be seen in the graph, a lower value is obtained under improved conditions of lubrication, e. g. due to partial build-up of hydrodynamic pressure in the sealing gap. On the other hand, when a mechanical seal is run under purely hydrodynamic conditions of operation, the coefficient of friction will rise as the speed increases – similar to hydrodynamic bearings.

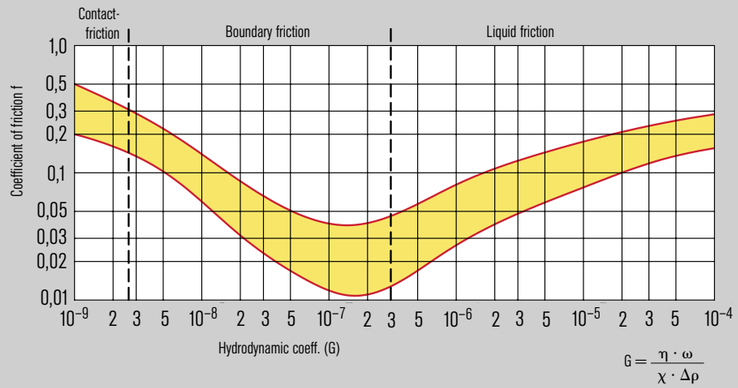

Gap width h

Seals with contacting faces

In contact seals with a theoretically parallel sealing gap, the distance between the two sealing faces is conditional on the roughness of the surfaces. Numerous measurements taken in the laboratory and in practice with due allowance for external factors indicate that a mean gap width of less than 1 mm can be used as a basis for calculating the normal degree of leakage.

Seals with non-contacting faces

Hydrostatically or hydrodynamically balanced, non-contacting mechanical seals adjust automatically to a defined gap width during operation. The width of the gap depends mainly on the shape of the gap in radial as well as circumferential direction, on the operating conditions and on the medium.

Load factor $\varkappa$

The balance ratio is just a non-dimensional factor used to assess a mechanical seal. A second one is the load factor $\varkappa$.

$$\varkappa = k + \frac{p_f \pm p_r}{\Delta p}$$

The balance ratio and the load factor are practically identical when the pressure differentials to be sealed are large. The friction at the dynamic secondary seals p_r is usually disregarded in the calculation.

Surface roughness

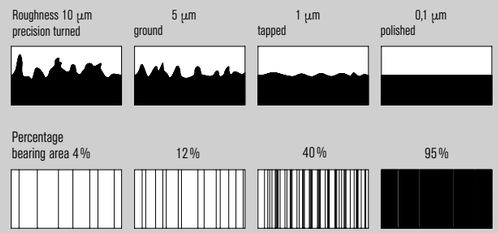

Degree of roughness in relation to the percentage bearing

Microfinished sliding faces made of various materials display the following average, arithmetic mean roughness values (R_a):

Tungsten carbide, nickel-bonded: 0,01 µm
Silicon carbide (SiC): 0,04 µm
Special cast Cr-steel: 0,15 µm
Carbon graphite: 0,10 µm
Aluminium oxide: 0,15 µm
C-SiC-Si/C-SiC: 0,15 µm

The lower the roughness value, the higher the percentage bearing area and hence the higher load capacity of a mechanical seal.

Sliding velocity v_g

The sliding velocity is usually quoted in relation to the mean sliding face diameter.

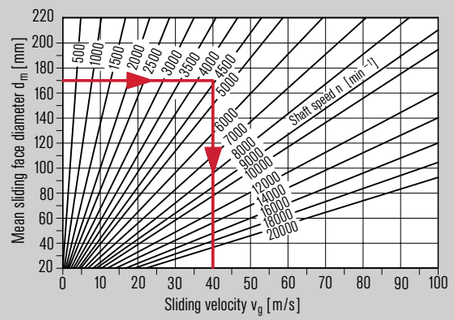

Example:
d_m = 170 mm
n = 4,500 min^{-1}
v_g = 40 m/s

Turbulence losses Pv

The turbulence-related consumption of power is not significant until the circumferential speed reaches 30 m/s (98 ft/s). It must be given due consideration particularly with special seals.

Heat transfer

The total power consumption of a mechanical seal has to be dissipated into the medium or the buffer fluid by means of appropriate measures in order to stop the seal from overheating. The necessary fluid flow rate for removal of the power losses is calculated by

$$\dot{V} = \frac{P_R + P_V}{\Delta T \cdot c \cdot \varrho}$$

Under certain conditions of installation or operation heat may pass from the product to the sealing compartment and will need to be taken into account when calculating the circulation rate.

Example calculation:
P_R = 420 W (1 W = 1 $\frac{J}{s}$)
ΔT = 10 K
Fluid: Water;
c = 4200 J / (kg · K)
ϱ = 1 kg / dm^3

$$\dot{V} = \frac{420\ W \cdot kg \cdot K \cdot dm^3}{10\ K \cdot 4200\ Ws \cdot 1\ kg} = 0.01\ l/s = 0.6\ l/min$$

Cooling water requirements

When estimating the amount of cooling water required by heat exchangers it can be assumed that the temperature of the cooling water will increase by 5 K between the inlet and the outlet. This means that 1 l/min of cooling water dissipates 350 W.

Technical information

Power consumption P_R of the sliding faces

The power consumption through friction of the sliding faces is calculated by the equation

$$P_R = (\Delta p \cdot k + p_f) \cdot v_g \cdot A \cdot f$$

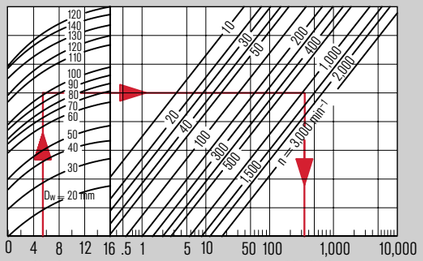

***Example M7:**
Δp = 5 bar
D_w = 100 mm
n = 1,000 min^{-1}
P_R = 310 W

* unbalanced rotating seal

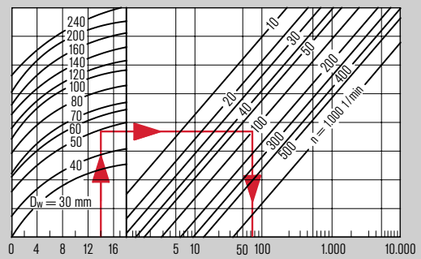

Example M48-D:
Δp = 14 bar
D_w = 50 mm
n = 100 min^{-1}
P_R = 70 W
Low-duty agitator seals (PN 16)

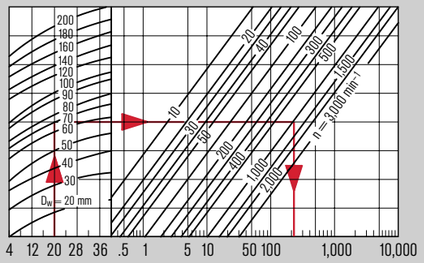

***Example H7:**
Δp = 20 bar
D_w = 70 mm
n = 1,000 min^{-1}
P_R = 215 W

* balanced rotating seal

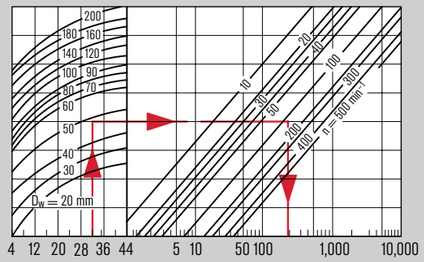

Example HS-D:
Δp = 32 bar
D_w = 50 mm
n = 100 min^{-1}
P_R = 195 W
Heavy-duty agitator seals (PN 40)

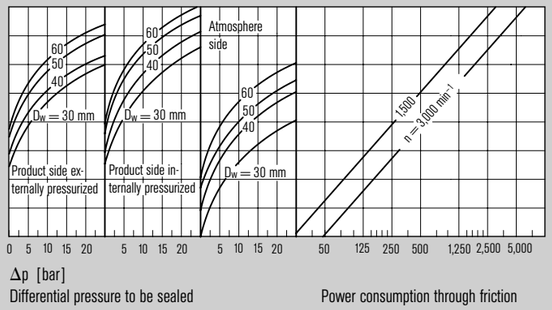

Balanced stationary seal of the HRC series

Power consumption

The total power consumption of a mechanical seal is calculated from
- The power consumed by the sliding faces.
- The power consumption due to turbulence created by the rotating parts.

Leakage rate Q

Calculated rates of leakage and power losses are not guaranteed values. They are statistical and calculated mean values which are determined on the basis of experience and extensive testing. The leakage rates and power losses which actually arise in a particular seal can be several times higher on account of factors that are impossible to quantify theoretically. As can be seen from formula, the leakage rate is mainly conditional on the actual gap width during operation. This depends in turn on many factors (see also gap width).

Factors influencing leakage
The major factors with an influence on a mechanical seal's leakage rate, correct functioning and reliability include:

- Machined finish of the sliding faces
- Flatness of the sliding faces and flatness deviations caused by thermal or pressure-induced deformations
- Machine vibrations or stability
- Mode of operation of the plant
- Characteristics of the medium to be sealed
- Correct installation of the mechanical seal

Formula for externally pressurized mechanical seals

$$Q = \frac{h^3}{\eta \cdot \ln\left(\frac{D}{d}\right)} \left[1{,}885 \cdot 10^{-4} \cdot \Delta p - 7{,}752 \cdot 10^{-19} \cdot \varrho \cdot n^2 \cdot (D^2 - d^2)\right]$$

Example calculation for a H7N/48 seal

$$Q = \frac{0{,}27^3}{4{,}7 \cdot 10^{-4} \cdot \ln\left(\frac{56{,}9}{51{,}9}\right)} \left[1{,}885 \cdot 10^{-4} \cdot 18 - 7{,}752 \cdot 10^{-19} \cdot 983 \cdot 3000^2 \cdot (56{,}9^2 - 51{,}9^2)\right]$$

$D = 56{,}9$ mm $h = 0{,}27$ µm
$d = 51{,}9$ mm $\Delta p = 18$ bar
$n = 3000\ min^{-1}$ $\varrho = 983\ kg/m^3$
$\eta = 4{,}7 \cdot 10^{-4}$ Pa · s

Q = 1,543 ml/h

Surface technology for sliding faces

Combinations of face materials such as carbon graphite/SiC and SiC/SiC have proven excellently suitable for use in mechanical seal technology, but permanently problem-free functioning also requires adequate lubrication in the sealing gap or, where gas-lubricated mechanical seals are concerned, contactless operation.

Dry running as result of inadequate lubrication or, in the case of gas seals, contact between the sliding faces during operation, leads to massive temperature increases and possible damage to the sliding faces and secondary seals.

In order to significantly extend the service life and reliability of such seals or enable their use under extreme conditions in the first place, EagleBurgmann offers three special sliding face coatings, namely DiamondFaces®, Diamond-Like-Carbon (DLC) and Titanium Nitride (DM-TiN). Each of these coatings has its own particular strengths, and which of them is to be used depends on the application for which it is intended.

DiamondFaces®
The introduction of DiamondFaces® by EagleBurgmann in 2007 was a milestone in the history of mechanical seal technology. A micro-crystalline layer, which has all the attributes of natural diamond, is applied to the seal faces by means of a chemical vapor deposition (CVD) process in a vacuum reactor at a temperature of 2,000 °C (3,632 °F). Developed in cooperation with the Fraunhofer Institute for Surface Engineering and Thin Films in Braun-schweig/Germany, the process produces high coating thicknesses and an extremely even seal face. Coating adhesion exceeds all known requirements in practical application.

Seal faces with DiamondFaces® coatings are extremely hard and wear-resistant, and exhibit low friction, excellent heat conductivity and extremely high chemical resistance. The technology increases the service life of mechanical seals used in pumps, agitators and compressors many times over. Time between maintenance calls increases considerably, and lifecycle costs are reduced significantly.

DLC (Diamond-Like-Carbon)
This amorphous carbon layer is applied using a plasma-supported chemical vapor deposition (PCVD) process, and contributes to lubrication and reducing friction. The material properties of the DLC layer can be defined as lying between those of pure diamond and carbon graphite, and it is used as start-up protection for silicon carbide sliding faces on pump and compressor seals.

DM-TiN Titanium Nitride
The DM-TiN titanium nitride coating (Standard: 1.4006/SU410, Japanese patent no. 2134661) is applied by means of an ion beam mixing process, and exhibits out-standing microhardness and excellent adhesive properties due to the fact that it penetrates the metal and forms a tight metallurgical bond.

Titanium nitride coatings are used as start-up protection for metallic seal faces on compressor seals (e. g. MDGS). DM titanium nitride/carbon graphite combinations have a good friction coefficient and exhibit excellent emergency running properties.

Technical information

Vapor curves

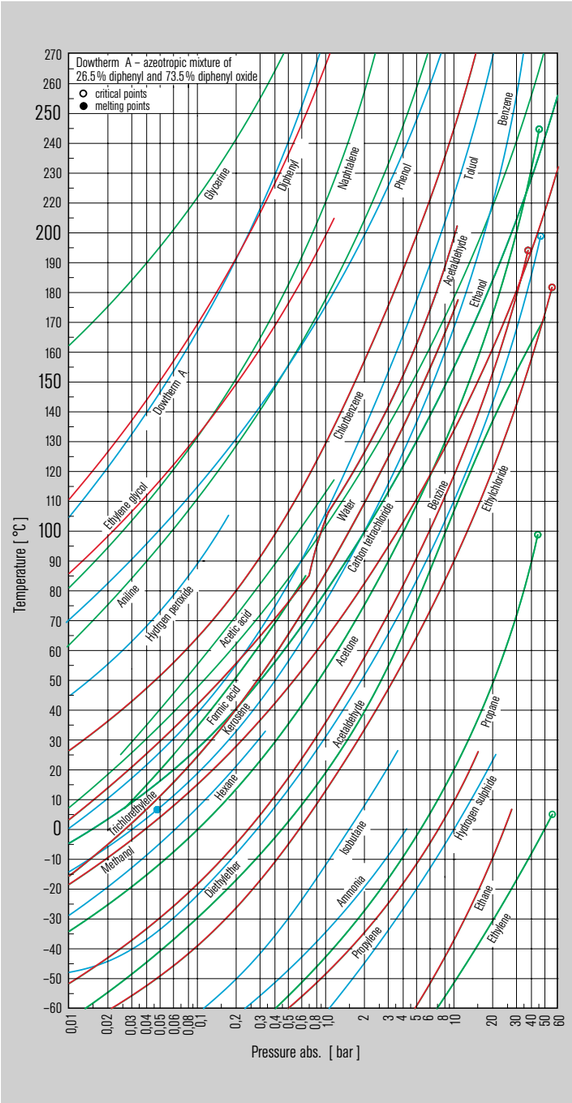

Acetaldehyde
Acetone
Formic acid
Ammonia
Aniline
Benzine
Benzene
Chlorobenzene
Diethyl ether
Diphenyl
Dowtherm A
Acetic acid
Ethanol
Ethane
Ethylchloride
Ethylene
Ethylenre glycol
Glycerine
Isobutane
Hexane
Kerosene
Methanol
Naphtalene
Phenol
Propane
Propylene
Hydrogen sulphide
Carbon tetrachloride
Trichloroethylene
Toluol
Water
Hydrogen peroxide

A sealing system for hydrocarbons must often make allowance for partial dry running due to their low boiling points. However with the right design features and face materials, it is possible to guarantee failsafe operation of the mechanical seal. The operating temperature must be at least 5 K lower than the boiling point under operating pressure.

Seat locking*) to EN 12756

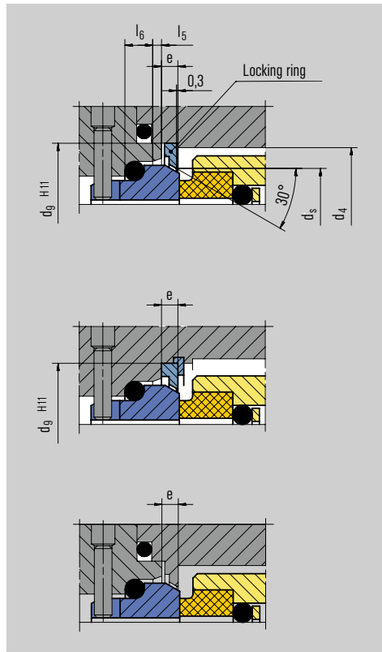

d_1	d_2	d_4 U	d_4 B	d_9 U	d_9 B	l_5	l_6	e	d_5
10	14	22	26	26	30	1.5	4	4	–
12	16	24	28	28	32	1.5	4	4	–
14	18	26	34	30	38	1.5	4	4	–
16	20	28	36	32	40	1.5	4	4	–
18	22	34	38	38	42	2.0	5	4	31.2
20	24	36	40	40	43	2.0	5	4	33.2
22	26	38	42	42	46	2.0	5	4	35.2
24	28	40	44	43	48	2.0	5	4	37.2
25	30	41	46	46	50	2.0	5	4	38.2
28	33	44	49	48	53	2.0	5	4	41.2
30	35	46	51	50	60	2.0	5	4	43.2
32	38	48	58	53	62	2.0	5	4	46.2
33	38	49	58	53	62	2.0	5	4	46.2
35	40	51	60	60	65	2.0	5	4	48.2
38	43	58	63	62	67	2.0	6	6	53.5
40	45	60	65	65	70	2.0	6	6	55.5
43	48	63	68	67	72	2.0	6	6	58.5
45	50	65	70	70	75	2.0	6	6	60.5
48	53	68	73	72	77	2.0	6	6	63.5
50	55	70	75	75	86	2.5	6	6	67.5
53	58	73	83	77	88	2.5	6	6	70.6
55	60	75	85	86	91	2.5	6	6	72.6
58	63	83	88	88	93	2.5	6	6	75.6
60	65	85	90	91	96	2.5	6	6	77.6
63	68	88	93	93	98	2.5	6	6	80.6
65	70	90	95	96	103	2.5	6	6	82.6
68	–	93	–	98	–	–	–	6	88.6
70	75	95	104	103	108	2.5	7	6	90.2
75	80	104	109	108	120	2.5	7	6	95.2
80	85	109	114	120	125	3.0	7	6	103.0
85	90	114	119	125	130	3.0	7	6	108.0
90	95	119	124	130	135	3.0	7	6	113.0
95	100	124	129	135	140	3.0	7	6	117.5
100	105	129	134	140	145	3.0	7	6	122.5

* not applicable for seats made of carbon

Extrusion characteristics of elastomeric O-Rings

The extrusion resistance of elastomeric O-Rings can be greatly enhanced by the use of support rings.

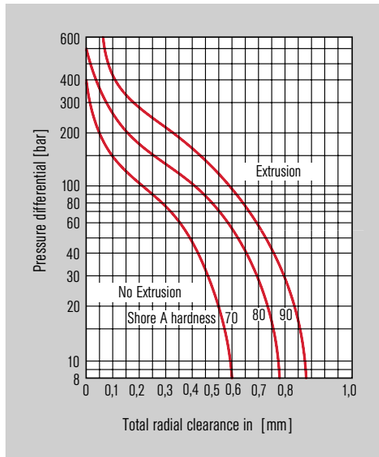

TTV O-Rings

Double PTFE-encapsulated O-Rings of the type used in EagleBurgmann mechanical seals combine the elasticity of the core materials (synthetic rubber) with the chemical and thermal resistance of the PTFE.

The material PTFE features good chemical and thermal resistance but it also displays a high degree of rigidity, a low coefficient of thermal conductivity, an unfavourable expansion characteristic and a tendency to cold flow. It is advisable therefore to avoid the use of O-Rings made of solid PTFE.

The assembly position of double PTFE-encapsulated elastomers is critical. Care must be taken to ensure that the joint on the outer jacket faces against the assembly direction, as otherwise there is a risk of the jacket opening and being pulled off. Bending of the jacket must be avoided at all costs to prevent leaks. Slip TTV rings onto tubes for safe storage.

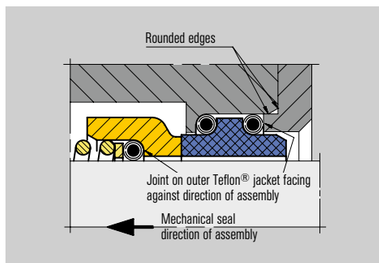

Functional principle gas-lubricated seals

In its basic design and mode of operation, the EagleBurgmann Gas Seal is the same as a conventional mechanical seal except for two differences:
a) the sliding faces are wider, and
b) they are lubricated by gas rather than liquid.
This is assured in outstanding manner by the sophisticated geometry of V- and U-grooves in the sliding faces. Even at low speeds a stable gas film develops in the sealing gap to separate the sliding faces and guarantee non-contacting, wear-free operation, at a minimum level of power consumption that is 95 % below that of liquid-lubricated seals.
Elaborate buffer fluid oil systems for the lubrication and cooling of double seals are superfluous. Gas pressurization at a level of around 5 to 10 % above product pressure (p_1) makes sure that no process medium can escape to the atmosphere. A small gap height of approximately 3 µm between the sliding faces results in minimum consumption of buffer gas of a magnitude that depends largely on the pressure, speed and seal diameter.

V-grooves

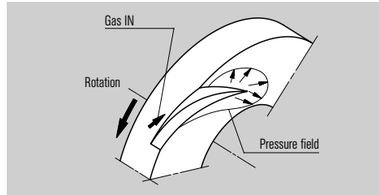

The V-grooves convey the gas by a rotary movement between the sliding faces. The resulting pressure rise causes the seal faces to lift off and ensures a contact-free operation. V-grooves are **dependent** on the direction of rotation.

U-grooves

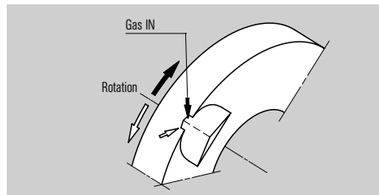

For sliding faces featuring U-grooves, the operating principle is similar to that for V-grooves, with one decisive difference: the direction of rotation is **independent.**

Technical information

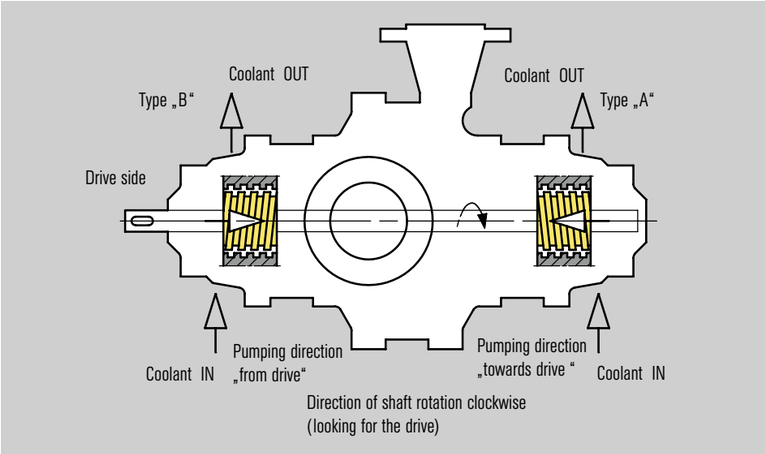

Contra-rotating pumping screw.

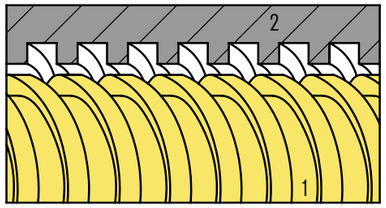

1 Pumping screw
2 Pumping sleeve

Pumping screw

Pumping screws are used to boost the circulation of coolant for single and double mechnical seals.
The direction of flow, delivery head and delivery rate can be adapted to the given operating conditions by suitable design measures.
Pumping screws are **dependent on the direction of rotation.** An **"F"** in the drawing number stands for a pumping screw. It follows after the type code. The optimum arrangement is afforded by the **contra-rotating pumping screw** where the thread of the stationary screw (pumping sleeve) faces in opposite direction to the rotating thread (pumping screw).

Direction of shaft rotation (looking from drive)	Pumping direction	Pumping screw type	Coding of components
Right	Towards drive	A	Pumping screw AR
			Pumping sleeve AL
	From drive	B	Pumping screw BL
			Pumping sleeve BR
Left	Towards drive	B	Pumping screw BL
			Pumping sleeve BR
	From drive	A	Pumping screw AR
			Pumping sleeve AL

Explanation
The diagram shows a multi-stage centrifugal pump with **clockwise** rotation (looking from the drive side), a **type B** mechanical seal with pumping direction **"from drive"** on the drive side and a **type A** mechanical seal with pumping direction **"towards drive"** on the nondrive side.

Pumping capacity of various pumping screws with pumping sleeve

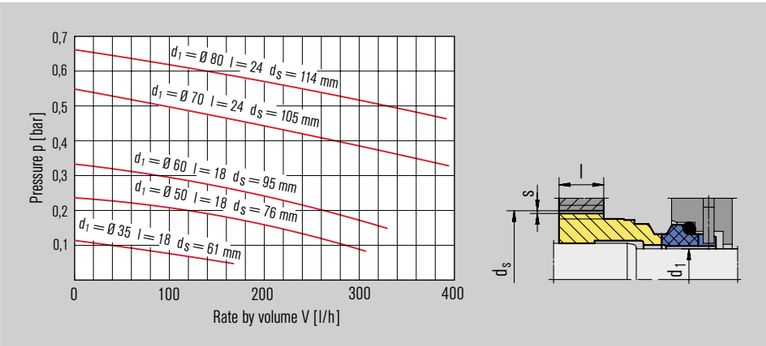

Pumping capacity of various pumping screws without pumping sleeve

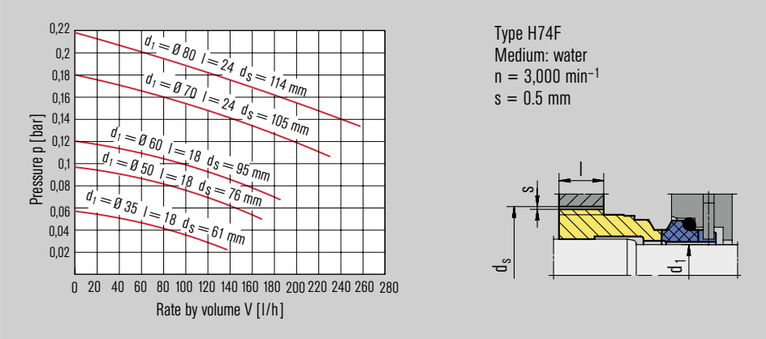

Super-Sinus spring

The Super-Sinus spring permits an almost uniform introduction of forces over the whole range of increased axial movement tolerances of mechanical seals, e. g. M7N/H7N. The one-piece spring is endless and has a very flat characteristic. The Super-Sinus spring has no welding spots to minimize corrosion. It is regularly made of 1.4571, optionally of Hastelloy®.

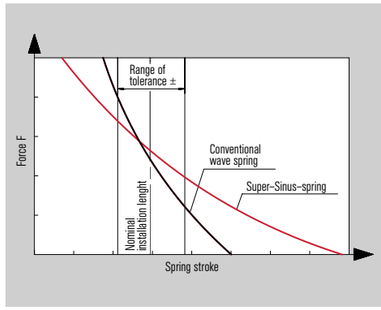

Conical spring

When a conical spring is used for driving the seal (e. g. in standard types M2 and M3), the mechanical seal becomes **dependent on the direction of rotation.** Looking toward the sliding face of the rotating parts of the seal, shafts rotating in clockwise direction require right-hand springs and shafts rotating in anticlockwise direction require left-hand springs. Mounting the conical spring is easier if you twist it onto the shaft with a screwing action in the same direction as the spring coiling. This screwing action will cause the spring to open. For brief reversals of the direction of rotation we recommend seal type "S30".

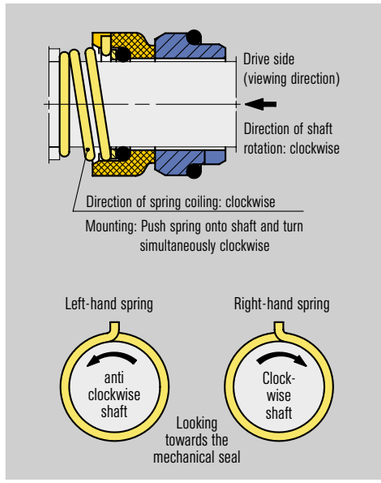

Types of drive

For a seal to function properly, the shaft torque must be transmitted uniformly to the shaft sleeve and/or rotating parts under all operating conditions. Depending on the seal design it is necessary to make allowance for centrifugal and axial forces and in some case to observe special installation instructions. Incorrect fitting can cause, for example, jamming and deformation of the seal.

Typical arrangements

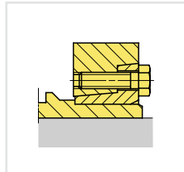
Shrink disk

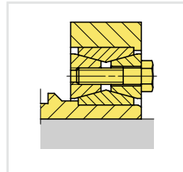
Clamping set

Set screw with cone point

Set screw with cup point

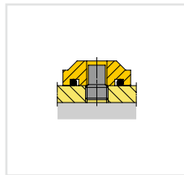
Allen set screw with full dog point

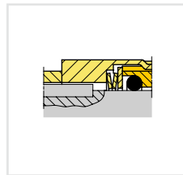
Drive key

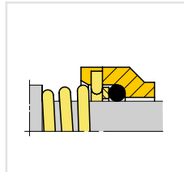
Conical spring

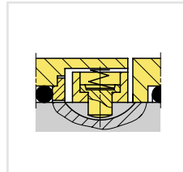
Spring loaded drive pin

Shrink disk

The pressure necessary for the transmission of torque is generated through clamping force on lubricated conical surfaces.
The shrink disk couplings can be released at any time by slackening the tensioning screws. All the parts involved are subjected to elastic deformation only, so the original clearance is restored once the screws are released.
Provided the conical surfaces are undamaged, the shrink disks can be retensioned any number of times (ensure correct lubrication). Shaft sleeves should not have a clearence diameter under the shrink disk and should make full contact with the shaft.

Prior to installation

To fit a seal you will need its installation and operating instructions with the correct drawing. Before starting, check the dimensions, the maximum acceptable deviations and the geometrical tolerances of the machine.

Edges and shoulders
All edges and shoulders onto or into which the mechanical seal is pushed during installation must be chamfered, deburred and rounded off to less than 30° x 2 mm.

Dimensional deviations
Acceptable deviations for dimensions having no tolerance specification:
- ISO 2768 Part 1, fine/medium for linear and angular dimensions
- Part 2, tolerance class K for general geometrical tolerances

Concentricity tolerance

Shaft in accordance with ISO 5199
In the area of the mechanical seal the shaft concentricity tolerance must not exceed 50 µm for diameters < 50 mm, 50 µm, 80 µm for diameters between 50 and 100 µm, and 110 µm for diameters > 100 mm.

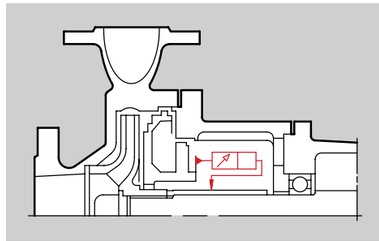

Seal chamber bore
For sliding velocities of v_g < 25 m/s the concentricity tolerance of the seal chamber in relation to the shaft should not exceed 0.2 mm, and when pumping screws are used it should not exceed 0.1 mm due to the effect of the pumping characteristic. If these values are exceeded please contact EagleBurgmann.

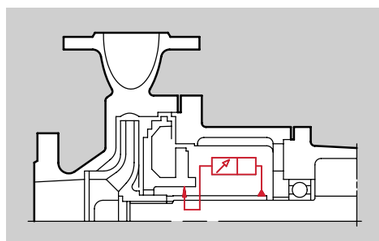

Technical information

Axial run-out

Mounting face

Axial run-out depends on the speed. Permissible values are indicated by the graph.

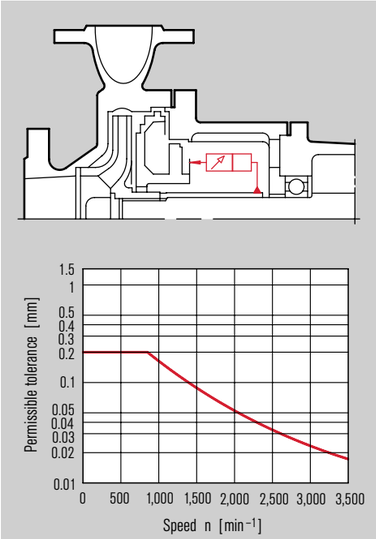

Surface finish

Finished surfaces according to EN 12756

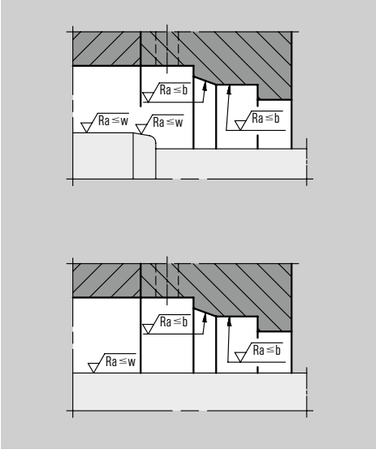

Mean roughness index	R_a for secondary seal material	
	b	w
Elastomers	2.5 µm	0.8 µm
Non-elastomers or optional use of elastomers and non-elastomers	1.6 µm	0.2 µm

Mechanical seal installation

Absolute cleanliness and care are essential when fitting mechanical seals. Dirt and damage to sliding faces and O-Rings jeopardize a seal's function. Any protective covering on the sliding faces must be removed without trace. Never put lubricant on the sliding faces – mount only in a completely dry, dustfree and clean state. The accompanying installation instructions and the notes on the assembly drawings must be observed exactly.

Fitting advice

To reduce the friction an O-Rings when mounting seals on a shaft or when inserting seal cartridges in their housing, apply a thin coating of silicon grease or oil to the shaft or housing (N. B.: this does not apply to elastomer bellows seals). Never allow EP rubber O-Rings to come into contact with mineral oil or grease. When inserting stationary seats, be careful to apply even pressure and use only water or alcohol to reduce O-Ring friction.

Series MG

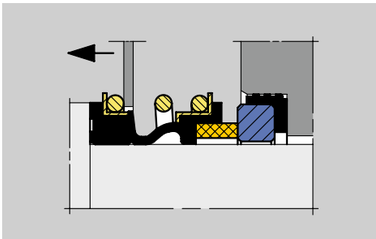

Use normal or soapy water (with a surfactant) to mount elastomer bellows seals of the MG series on the shaft. Wet the seal seat and the shaft thoroughly and keep wet if the distance to slide the seal is rather long. Never use oil or grease! After completing the assembly, check that the rings, springs and seal face sit correctly and tight.

Series MFL

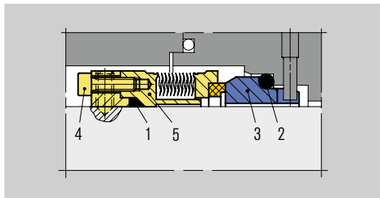

Never over-compress metal bellows seals. Apply the axial mounting force needed to push the seal onto the shaft via the bellows drive collar.

Points to note when using Statotherm® moulded rings (e. g. MFLWT80):

- Install moulded rings (Item 1 and 2) in the dry state only and compress in axial direction only (radial deformation would result in their destruction).
- Apply even pressure to insert the moulded ring (Item 2) and the stationary seat (Item 3) in the recess (concentricity tolerance!).
- Tighten the screws (Item 4) in the rotating part gradually and in circular succession (not cross-wise) in several steps, keeping the gap as even as possible.

Venting

To prevent damage to the sliding faces from dry running, the buffer space must be carefully vented **after you have installed the seal.** This is particularly important for those types of buffer/barrier fluid systems that do not vent themselves or are partially self venting (double seal with buffer/barrier fluid systems).

Screw locking

If no special provision is made for locking screw thread, use set screw with a suitable adhesive (e. g. Loctite®) after removing any grease.

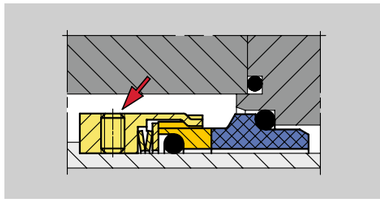

Seal supply systems

Circulation

For single seals it is generally advisable to install a circulation pipe from the discharge nozzle of the pump to the seal chamber. A pipe size G 1/4 is normally sufficient. There should be a close fitting neck bush between the pump casing and the seal chamber.

Flushing

Flushing systems are installed in accordance with ISO 5199, Appendix E, Plan No. 08a or API 682, Appendix D, Plan 32. A clean and mostly cold external medium is injected into the stuffing box in the area of the sliding faces via on orifice (throttle) into the medium to be sealed. Flushing is used either to lower the temperature or to prevent deposits forming in the area of the mechanical seal. Again it is recommanded that a close fitting neck bush is employed.

Quench

Quench is the term commonly used in sealing engineering for an arrangement that applies a pressureless external medium (fluid, vapour, gas) to a mechanical seal's faces on the atmosphere side. A quench is used on the one hand when a single mechanical seal does not function at all or only within certain limits without auxiliary measures or when a double mechanical seal with pressurized barrier medium is unnecessary. When an integral stationary seat stop is fitted, the quench pressure should not exceed 1 bar. A quench performs at least one of the duties described below.

Fluid quench

- Absorption or removal of leakage by the quench medium
- Monitoring of the mechanical seal's leakage rate by periodic measurement of the level of the quench medium in the circulation vessel or thermosyphon vessel
- Lubrication and cooling of the standby mechanical seal
- Exclusion of air: For media which react with atmospheric oxygen the queching medium stops the leakage making contact with the atmosphere
- Protection against dry running: For applications subject to brief, periods of vacuum and operation of pumps without pumping liquid (submersible pumps) the quenching medium prevents dry running of the mechanical seal
- Stabilization of the lubrication film: For operation under vacuum and/or sealing pressures close to the vapour pressure, the quenching medium stabilizes the lubrication film
- Cooling or heating of the outboar side of the mechanical seal.

Steam quench

- Heating: For media with a high melting point the vapour quench prevents the leakage from solidifying in that area of the mechanical seal critical for its proper functioning
- Exclusion of air
- Removal of leakage

Gas quench

- Icing protection: With operating temperatures < 0 °C (cryogenic mechanical seals), the injection of nitrogen or dry air into the seal housing prevents the mechanical seal parts on the atmosphere side from icing up
- Exclusion of air
- Removal of leakage

Sealing the quench medium

- Outboard mini-gland – the preferred choice for steam, not so much for liquids
- Lip seals – the preferred choice for oils and water
- Mechanical seals – the preferred choice for all circulating quench fluids

Barrier system

To guarantee the correct working of double mechanical seals, the barrier interspace (between the product side and the atmosphere side of the mechanical seal) must be completely filled with clean barrier medium. Before starting up double mechanical seals it is vital, therefore, to ensure a sufficient rate of circulation of the barrier fluid. The barrier fluid pressure should lie 10 % or at least 2 ... 3 bar above the maximum pressure to be sealed. The flow rate must be controlled to ensure that the temperature of the barrier medium at the outlet lies below approximately 60 °C and that it does not exceed boiling point under any circumstances. The maximum acceptable inlet/outlet temperature differential is 15 K. The barrier fluid outlet lies at the highest point of the stuffing box for automatic venting of any vapour.
In view of the basic conditions of operation, a barrier system must perform the following functions:

- Build-up pressure in the barrier inter space
- Compensation of leakage
- Circulation of the barrier medium
- Cooling of the barrier medium
- Cooling of the seal

Barrier fluid systems for liquid-lubricated mechanical seals break down into two basic categories:

- **Open circuit**
  A circuit in which both the circulation and the pressurization take place through a single barrier fluid system (e. g. SPA). After each circuit the barrier fluid is relieved and collected in a pressureless tank.

- **Closed circuit**
  In this type of circuit all the components are kept under the same pressure. Pressure is applied by means of nitrogen (TS system) or the process medium pressure (DRU system), or via a refill system (SPN). Pressure loss in the circuit must be taken into account when drawing up the design.

Pressure vessel regulations

Requirements imposed by the German Pressure Vessel Code on Group III pressure vessels (Section 8)

- Section 4 of the German Pressure Vessel Code orders that pressure vessels be built and operated in accordance with the generally valid rules of engineering (such as the German AD Code).
- AD Bulletin W2 requires every pressure- bearing part made of austenitic steel to be accompanied by a material certificate EN 10204 3.1 B or 3.1 C.
- The manufacturer must subject every pressure vessel to a pressure test.
- Every pressure vessel must be issued with a certificate confirming its correct production and pressure testing in accordance with the Pressure Vessel Code. This certificate is included with the delivery.

Barrier medium

The barrier medium fulfills two functions – it dissipates the heat generated by the seal and it prevents the product from penetrating the sealing gap to any appreciable degree. Any liquid and any gas can be chosen as barrier medium, with due consideration to the corrosion resistance of the parts it comes into contact with and to its compatibility with the process medium and surroundings. The barrier medium must not contain any solids. It is particularly important that liquid barrier media do not tend to precipitate and that they have a high boiling point, a high specific thermal capacity and good thermal conductivity. Clean, demineralised water satisfies these requirements to a high degree.
Hydraulic oil is often used in buffer fluid units and water in closed barrier fluid circuits. To prevent damage to the TS and sealing system, due allowance must be made for the coefficients of volumetric expansion of the barrier fluids used.

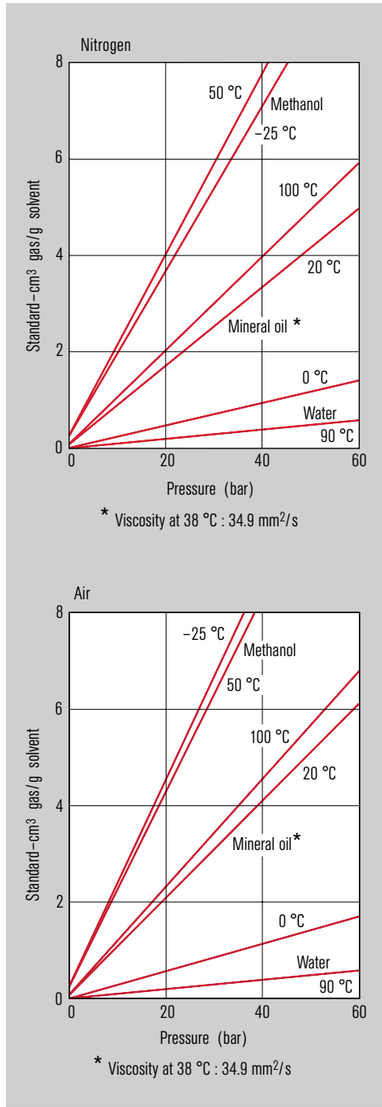

Gas solubility in typical barrier media

Circulation systems to API 682/ISO 21049

Clean pumping media

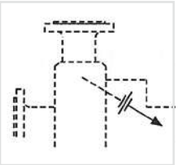

Plan 1
Internal circulation from the pump case to the seal.

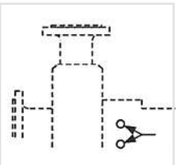

Plan 2
Dead end seal chamber with no circulation. Stuffing box cooling and a neck bush are necessary, unless otherwise specified.

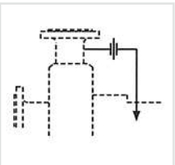

Plan 11
Circulation from the pump discharge, through an orifice to the seal.

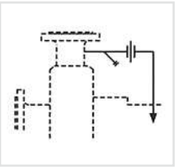

Plan 12
Circulation from the pump discharge, through a strainer and an orifice to the seal.

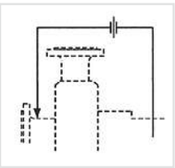

Plan 13
Circulation from the seal chamber, through an orifice and back to pump suction.

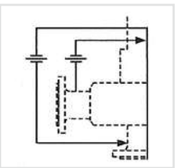

Plan 14
Circulation from pump discharge through orifice to seal chamber and trough orifice back to pump suction. (Combination of Plan 11 + 13).

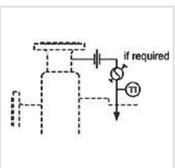

Plan 21
Circulation from the pump discharge, through an orifice and a cooler to the seal.

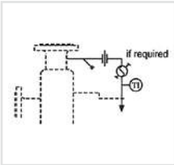

Plan 22
Circulation from the pump discharge, through a strainer, an orifice and a cooler to the seal.

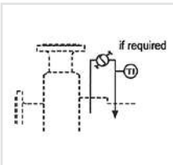

Plan 23
Circulation by means of a pumping ring from the seal, through a cooler and back to the seal.

Contaminated and special pumping media

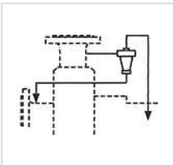

Plan 31
Circulation from the pump discharge through a cyclone separator.

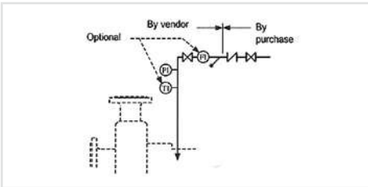

Plan 32
Injection of clean fluid into the seal chamber from an external source.

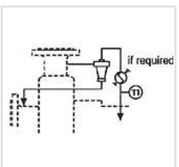

Plan 41
Circulation from the pump case through a cyclone separator, and clean fluid through a cooler to the seal.

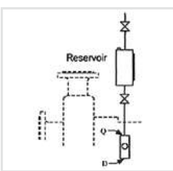

Plan 51
Dead-end quench (usually methanol).

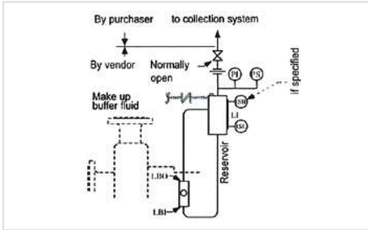

Plan 52
External fluid reservoir, pressureless, thermosiphon or forced circulation as required.

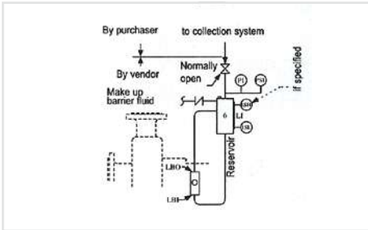

Plan 53A
Circulation with thermosiphon system, pressurized. Forced circulation by pumping ring or circulation pump.

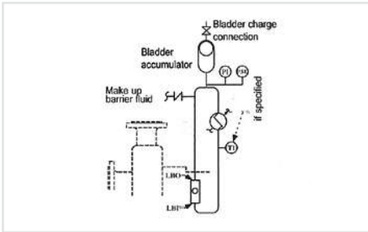

Plan 53B
Circulation with bladder accumulator and cooler, pressurized. Forced circulation by pumping ring or circulation pump.

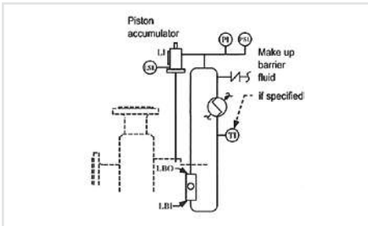

Plan 53C
Circulation with pressure booster (DRU) and cooler. Pressurized by reference pressure of seal chamber. Forced circulation by pumping ring or circulation pump.

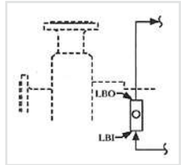

Plan 54
Circulation of clean fluid from an external system.

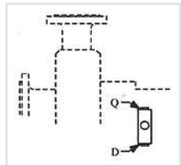

Plan 61
Tapped connections for the customer's use.

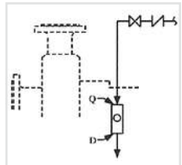

Plan 62
External fluid quench (steam, gas, water, etc.).

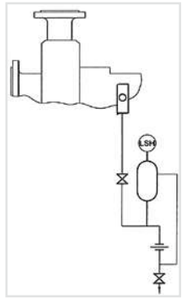

Plan 65
External drainage of high leakage controlled by a floating switch.

Circulation systems for gas-lubricated mechanical seals

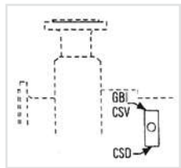

Plan 71
Tapped connections for purchaser's use. Typically this plan is used when the purchaser may use buffer gas in the future.

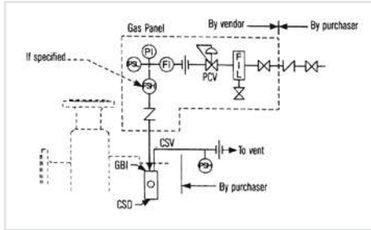

Plan 72
Externally supplied gas buffer for Arrangement 2 seals. Buffer gas may be used alone to dilute seal leakage or in conjunction with Plan 75 or 76 to help sweep leakage into a closed collection system. Pressure of buffer gas is lower than process side pressure of inner seal.

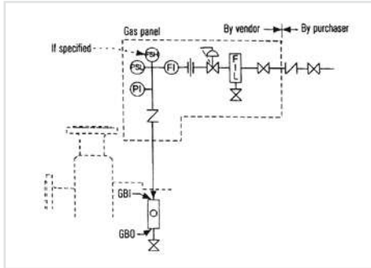

Plan 74
Externally supplied barrier gas used to positively prevent process fluid from leaking to atmosphere. Pressure of barrier gas is higher than process side of inner seal. When specified, orifice in barrier gas supply line to be 0.062" (1.5 mm).

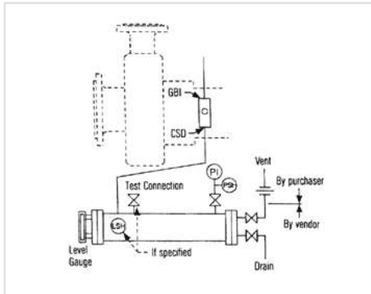

Plan 75
Containment seal chamber drain for condensing leakage on Arrangement 2 seals. This plan is used when pumped fluid condenses at ambient temperatures. System is supplied by vendor. Valves to be installed per figure and must be accessible for operator use relative to ground clearance and other obstructions.

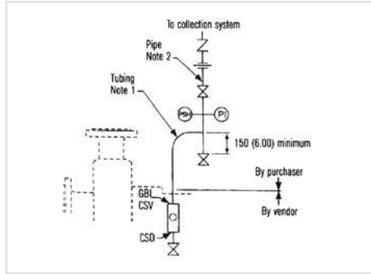

Plan 76
Containment seal chamber drain for non-condensing leakage or Arrangement 2 seals. This plan is used when pumped fluid does not condense at ambient temperatures. System is supplied by purchaser. 1. Tubing shall be 13 mm (1/2") minimum and shall rise continuously from the CSV connection to the piping/instrument harness. 2. Harness shall be DN 15 (1/2") minimum pipe. Harness shall be supported from overhead structure or side stand such that no strain is put on tubing connected to seal gland.

Legend liquid-lubricated seals

	Cooler
	Cyclone separator
	Strainer
	Flow control valve
	Block valve
	Nonreturn valve
	Orifice
D	Drain
F	Flush
FI	Flow indicator
LBI	Liquid buffer/barrier inlet
LBO	Liquid buffer/barrier outlet
LI	Level indicator
LSH	Level switch MAX
LSL	Level switch MIN
PI	Pressure indicator
PS	Pressure switch
PSL	Pressure switch MIN
TI	Temperature indicator
Q	Quench

Legend gas-lubricated seals

F	Flush
GBI	Gas buffer/barrier inlet
GBO	Gas barrier outlet
CSV	Containment seal vent
CSD	Containment seal drain
FI	Flow indicator
FIL	Coalescing Filter, used to ensure slids and/or liquids might be present in buffer gas supply do not contaminate seals.
FSH	Flow swith high
LSH	Level swith high
PCV	Pressure control valve, used to limit buffer gas pressure to prevent reverse pressurization of inner seal and/or limit pressure applied to containment seal.
PI	Pressure indicator
PSL	Pressure switch low
PSH	Pressure switch high
V	Vent

Mechanical seal selection by media

6

The recommendations in the media tables are based on the "typical case" of a seal for a horizontal centrifugal pump. Other types of machine, installation conditions, modes of operation, designer's, manufacturer's and operator's specifications, local regulations and so on can result in a different choice of mechanical seal.

For complex sealing duties it is always advisable for the user to consult with our specialist engineers.

Introduction 274
Media tables 277

Short legend:
Fold-out page at back cover.

Mechanical seal selection by media

The recommendations in the media tables are based on the "typical case" of a seal for a horizontal centrifugal pump. Other types of machine, installation conditions, modes of operation, designer's, manufacturer's and operator's specifications, local regulations and so on can result in a different choice of mechanical seal. For complex sealing duties it is always advisable for the user to consult with our specialist engineer. Explanations to columns 1 to 16:

Column 1: Media designation

Designations of materials to be sealed comply as far as possible with IUPAC rules (IUPAC = International Union of Pure and Applied Chemistry). Where a material has several commonly used designations and common names, it is listed in accordance with IUPAC rules with cross-referencing of its other names. Designations are listed in alphabetical order.

Column 2: Notes on the media

G = mixture/group (compound)
The media is a mixture of various isomers of one substance or it is a group of substances having close chemical ties.

N = natural product
The medium is a natural product or the refined form of a natural product with changing proportions of its various constituents.

® = trade mark
The constituents of the media or their proportions in the medium are unknown or are not known exactly.

S = collective term
The generalized mechanical seal recommendation is no more than a pointer to a suitable mechanical seal.

TA = TA-Luft relevant medium.
The requirements of the TA-Luft air quality control directive have to be considered.

V = impurities
The medium contains large quantities of impurities due to the peculiarities of the process.

Column 3: Concentration

– = The media normally occurs in pure form and (as in the case of gases and other media requiring a double mechanical seal) – the concentration has no bearing on the mechanical seal selection.

< 10 = concentration less than 10 % by weight.

~ 10 = The designation in column 1 is the common name for approximately 10 % aqueous solution.

F10 = A solids content of up 10 % by weight.

L = Solution of defined composition

< L = Unsaturated solution

> L = Supersaturated solution

Sch = Melt

Sus = Suspension of defined composition

Column 4: Temperature

< 100 = less than 100 °C

< F = minimum of 10 °C above solidifying temperature

> K = minimum of 10 °C above crystallization temperature

< Kp = For aqueous solutions: Up to approximately 10 °C below boiling point at atmospheric pressure.
For gases: 20 °C below boiling point of the liquefied gas; at the same time, the sealing pressure must be a minimum 3 bar higher than the vapor pressure.
For other media: Up to approx. 20 °C below boiling point at 1 bar
(but no higher than 400 °C)

> Pp = minimum 10 °C above pour point

TG = Up to the operating temperature limit of the mechanical seal's materials in contact with the product.

Column 5: Arrangement of shaft seal

Designation in accordance with ISO 5199, Appendix E; explanations are modified in parts.

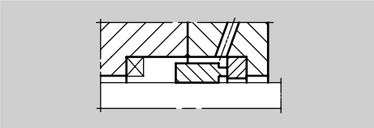

Single mechanical seal arrangement

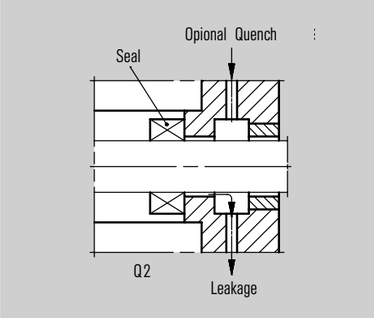

Quench arrangement

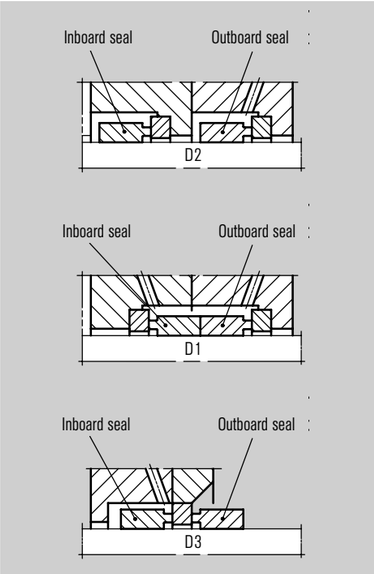

Double mechanical seal arrangement

S = Single mechanical seal
These seals can be unbalanced, balanced, with or without circulation or flushing of seal faces, with or without throttle bushing.

D = Double mechanical seal
Either one of the seals can be unbalanced or balanced on its own, or both together.

Q = Quench arrangement for single and double mechanical seals.
Liquids are sealed by lip seal, gaseous media by.

Column 6: Auxiliary piping plans

Basic arrangements and alternatives see API 682/ISO 21049.

Column 7: Additional measures

D = Steam quench

(H), H = Heating (where necessary) of the seal housing, seal cover, buffer medium

kD = Conical stuffing box

SS = Splash guard necessary. Leakage pipe-away recommended.

SW = Regular replacement of buffer medium necessary.
Alternative is a constant through flow of buffer medium.

QW = Regular replacement of quench medium necessary.
An alternative is a constant through flow of quench medium; approximately 0.25 l/min is recommended.

ThE = Thermal buffer

Column 8: Mechanical seal type

In the case of double or tandem mechanical seals, the recommendation applies to the mechanical seal inboard. The choice of the outboard seal is dictated by the buffer/-quench medium.

1 = Mechanical seal having O-Ring secondary seals; unbalanced or balanced; rotating spring in contact with the product, e. g. M3N, M7N, H7N

2 = Mechanical seal having O-Ring secondary seals; unbalanced or balanced; rotating springs not in contact with the product, e. g. HJ ...

3 = Mechanical seal having O-Ring secondary seals; unbalanced or balanced; stationary springs not in contact with the product, e. g. HR ...

4 = Same as 3 but no metal parts in the product; e. g. HR31/d_H – G9

5 = Mechanical seal with elastomer bellows; bellows as, MG ...

6 = Mechanical seal with metal bellows; such as, MFL

X = Special design e. g. a modified MR-D

Column 9: Materials of construction

for inboard mechanical seals. For an explanation of the material codes and their indices, consult the material key.

Column 10: Hazard warnings and reasons for recommending a double mechanical seal or quench.

When compiling these seal selections and material recommendations, it was generally assumed that the machine in question is located in a sheltered building frequented occasionally or continually by persons coming into contact with liquid or vapor leakage of medium from all types of sealing points. As such, considerations of health and environmental protection had a strong bearing on the choice of seal category.
"Health hazard" and "Ignition/Explosion" can lose much of their significance if the machine is installed in the open or in areas rarely frequented by people and ringed with warning signs. If no mention is made to either of the reasons 1 to 5 for recommending a double mechanical seal or a single mechanical seal with quench, it is acceptable to use a single mechanical seal.
The decision in favor of a single mechanical seal must be taken by the user of the machine or the contractor. As he is the only one to know all conditions and regulations relating to the process and to assess the risks.

Letters in column 10: Health hazard warnings

T = Toxic
Media which in low quantities cause death or acute or chronic damage to health when inhaled, swallowed or absorbed via the skin.

T+ = Very toxic
Media which in very low quantities cause death or acute or chronic damage to health when inhaled, swallowed or absorbed via the skin.

Xn = Harmful
Media which may cause death or acute or chronic damage to health when inhaled, swallowed or absorbed via the skin.

Xi = Irritant
Non-corrosive media which, through immediate, prolonged or repeated contact with the skin or mucous membrane, may cause inflammation.

C = Corrosive
Media which may, on contact with living tissues, destroy them.

Carcinogenic:
Substances and preparations which, if they are inhaled or ingested or if they penetrate the skin, may induce cancer or increase its incidence.

Mutagenic:
Substances and preparations which, if they are inhaled or ingested or if they penetrate the skin, may induce heritable genetic defects or increase their incidence. Labeling of media with carcinogenic or mutagenic effect:

R 40: Limited evidence of a carcinogenic effect
R 45: May cause cancer
R 46: May cause heritable genetic damage
R 49: May cause cancer by inhalation

Toxic for reproduction:
Substances and preparations which, if they are inhaled or ingested or if they penetrate the skin, may produce, or increase the incidence of, non-heritable adverse effects in the progeny and/or an impairment of male or female reproductive functions or capacity. Labeling of media with a toxic effect for reproduction:

R 60: May impair fertility
R 62: Possible risk of impaired fertility
R 63: Possible risk of harm to the unbörn child

Technical grounds and environmental protection

1 = Vapor pressure/gas
At normal working temperatures, the medium has a vapor pressure of > 1 bar. If the working temperature lies below boiling point (column 15) or if the sealing pressure lies clearly above the vapor pressure, a single mechanical seal may be used with consideration of the duty details.

2 = Corrosion
The medium attacks all standard metals. Mechanical seals with no metal parts on product side must therefore be used.

3 = Exclusion of air
If the medium contacts or mixes with the atmosphere, it forms an explosive or reacts with a damaging effect on the environment, the medium itself and the machine and mechanical seal.

4 = Lubricating properties
Under normal conditions, the medium has such poor lubricity that a single mechanical seal is at risk from dry running.

5 = Icing
Normally the medium is conveyed at temperature below 0 °C. Without auxiliary equipment, the proper functioning of a single mechanical seal is at risk from freezing atmospheric moisture.

6 = Leakage
Absorbed and/or flushed away by the quench, or prevented by a double mechanical seal necessary.

F = Highly flammable
Media which may become hot and finally catch fire in contact with air at ambient temperature without any application of energy, or solid media which may readily catch fire after brief contact with a source of ignition and which continue to burn or to be consumed after removal of the source of ignition, or liquid media having a very low flash-point, or media which, in contact with water or damp air, evolve extremely flammable gases in dangerous quantities.

F+ = Extremely flammable
Liquid media having an extremely low flash-point and a low boiling-point and gaseous media which are flammable in contact with air at ambient temperature and pressure

O = Oxidizing
Media which give rise to a highly exothermic reaction in contact with other substances, particularly flammable substances.

E = Explosive
Solid, liquid, pasty or gelatinous media which may also react exothermically without atmospheric oxygen thereby quickly evolving gases, and which, under defined test conditions, detonate, quickly deflagrate or upon heating explode when partially confined.

N = Dangerous for the environment
Media which, when they enter the environment, would or could present an immediate or delayed danger for one or more components of the environment. (The hazard symbols are according to the EU directive 67/548/EEC, "Classification, packaging and labeling of dangerous substances" of June 1967, status April 2004)

U = Insufficient information
The medium designation is imprecise or the available information on the medium is insufficient to assess the serviceability of a single mechanical seal.

Mechanical seal selection by media

Column 11: TLV

The values quoted in ml/m³ = ppm (parts per million) are taken from Bulletin 30 published by the Senate Commission for Testing Hazardous Materials: "Threshold Limit Values and Biological Material Tolerances".

Additional symbols:
mg: TLVs are quoted in mg/m³ instead of ppm
#, e. g. # 0.5 for barium ...: 0.5 mg/m³, calculated as Ba

* "According to the current level of knowledge, the action of this substance constitutes a distinct carcinogenic hazard for humans. No concentration values are given for this substance in the list because it is still impossible to quote any concentration as being safe. With some of these substances, there is even a great risk from absorption through healthy skin. If the use of such substances is unavoidable for technical reasons, special safety and monitoring measures must be taken."

The seal selection takes account of the TLV as follows:

- TLV < 5 ppm or*: Use of a double mechanical seal is generally recommended, but see paragraphs 2 + 3 of the introductory note on column 10.
- TLV ≥ 5, ≤ 25 ppm: A double mechanical seal or a single mechanical seal with quench is recommended. If column 10 contains no further grounds other than "health hazard" for choosing a tandem or double mechanical seal, a single mechanical seal can be used, provided other measures rule out all risks to humans.

Column 12: Normal condition

of the pure medium at 20 °C and 1.013 bar:

ga = gaseous
fe = solid; no further details available
fl = liquid
kr = crystalline
pa = viscous

This column contains the following notes on aspects of sealing:
ga requires a double mechanical seal in most cases. If the pressure to be sealed lies distinctly above the vapor pressure at working temperature, a single mechanical seal with or without quench can be used under certain circumstances.

fl indicates the use of single mechanical seal, but other influencing factors such as the working temperature (vapor pressure at pumping temperature, health hazard, risk of explosion or corrosion can necessitate a tandem or double mechanical seal.

fe, kr indicates that the medium must be molten (e. g. sulphur, DMT), dissolved (e. g. salts) or suspended (e. g. limestone or gypsum in water), otherwise it cannot be pumped or stirred.

Column 13: Melting point

(= Fusion point F) in °C If there are unequal values for the solidifying point (setting temperature) and the melting point (liquefying temperature), or different values or modifications, the higher value is always quoted. For some mixtures of media, solidification ranges or pour points are quoted. With fusion points above room temperature and/or working temperatures close to fusion point, it is necessary to check (with due consideration of the other operating conditions such as intermittent mode, full stand-by pump) whether the machine or at least the seal housing requires heating.

Additional signs:
K ...: Crystallization at temperatures below ... °C
S ...: Sublimation at ... °C

If there is an additional %-figure, the quoted temperature applies to the ... % aqueous solution.

Column 14: Boiling point

Boiling point of the medium in °C under normal pressure (1.013 bar). Different reference pressures are marked. If the working temperature is close to or above boiling point, the seal selection and material recommendation must be checked.

Additional signs:
A ...: The azeotrope boils at ... °C
Z ...: Decomposition at ... °C

(...): Reference pressure in mbar
If there is an additional %-figure, the quoted temperature applies to the ... % aqueous solution.

Column 15: Density

For media that are liquid or solid under normal conditions, the density is quoted – where known – in g/cm³ at 20 °C. Different reference temperatures are indicated.
For gases there is only an indication whether they are heavier than air (+) or lighter than air (–). This is also a pointer to their behavior in the event of leakage: sinking, rising or self-dissolving.

Additional signs:
(...): Reference temperature in °C
A ...: The quote density applies to the azeotrope at ... % weight. ...
%: Density of ... % aqueous solution

Media					Mechanical seal									Additional information on the medium					
Code of materials and legend see inside of back cover. Please observe the note on page 1.	Chemical formula	Remark	Concentration %	Temp. °C	Arrange-ment	Auxil. piping	Addit. measures	Seal type	Materials to EN 12756 1 Seal face	2 Seal face	3 Sec. seal	4 Spring	5 Others	Hazard warnings	TLV-value	Normal condition	Melting temperature °C	Boiling point °C	Density g/cm³
1		2	3	4	5	6	7	8						10	11	12	13	14	15
A																			
Acetaldehyde (Ethanal)	CH_3CHOH	TA	–	100	D	53A		1	$Q_1(S)$	B	M_2	G	G	Xn,F+,R40,1,3	50	fl	–124	21	0,78
Acetates --> *Acetic acid esters*																			
Acetic acid:	CH_3COOH	TA	–	<Kp	S,Q	62	QW	1	$Q_1(V)$	B	M_2	M	M	C	10	fl			
Acetic essence	CH_3COOH	TA	~25	<Kp	S	11		1	$Q_1(V)$	B	M_2	G	G	C	10	fl			
	CH_3COOH	TA	<90	25	S,Q	62	QW	1	$Q_1(V)$	B	E	G	G	C	10	fl			
Glacial acetic acid	CH_3COOH	TA	>96	<80	S,Q	62	QW	1	$Q_1(V)$	B	M_2	G	G	C	10	fl	17	~118	1,05
Vinegar	CH_3COOH	TA	~10	<60	S	11		1	$Q_1(S)$	B	E	G	G	Xi	10	fl			
Acetic anhydride	$C_4H_6O_3$	TA	–	<100	S,Q	62	QW	1	$Q_1(V)$	B	M_2	G	G	Xn,C	5	fl	–73	139	1,08
Acetic acid esters:																			
Acetic acid benzyl ester	$C_9H_{10}O_2$		–	<80	S	11		1	$Q_1(S)$	B	M_2	G	G	Xi		fl	–51	213	1,057
Acetic acid butyl esters:																			
Butyl acetate	$C_6H_{12}O_2$		–	<80	S,Q	62		1	$Q_1(S)$	B	M_2	G	G		200	fl	–77	126	0,882
sec. Butyl acetate	$C_6H_{12}O_2$	TA	–	<40	S,Q	62		1	$Q_1(S)$	B	M_2	G	G	F	200	fl	–99	112	0,865
tert. Butyl acetate	$C_6H_{12}O_2$	TA	–	<40	S,Q	62		1	$Q_1(S)$	B	M_2	G	G	F	200	fl		98	0,859
Isobutyl acetate	$C_6H_{12}O_2$	TA	–	<40	S,Q	62		1	$Q_1(S)$	B	M_2	G	G	F	200	fl	–99	118	0,87
Acetic acid cinnamyl ester	$C_{11}H_{12}O_2$		–	<80	S	11		1	$Q_1(S)$	B	M_2	G	G			fl		262	1,057
Acetic acid cyclohexyl ester	$C_8H_{14}O_2$		–	<80	S	11		1	$Q_1(S)$	B	M_2	G	G			fl	–83	173	0,969
Acetic acid ethyl ester	$CH_3COOC_2H_5$	TA	–	<60	S,Q	62		1	$Q_1(S)$	B	M_2	G	G	Xi,F	400	fl	–83	77	0,90
Acetic acid hexyl ester	$CH_3COOC_6H_{13}$		–	<80	S	11		1	$Q_1(S)$	B	M_2	G	G		50	fl	–81	171	0,878
Acetic acid isopropenyl ester	$C_5H_8O_2$	TA	–	<60	S	11		1	$Q_1(S)$	B	M_2	G	G	F		fl	–93	97	0,92
Acetic acid methyl ester	$C_3H_6O_2$	TA	–	<40	S,Q	62		1	$Q_1(S)$	B	M_2	G	G	Xi,F	200	fl	–98	58	0,928
Acetic acid pentyl esters (Pentyl-, Amyl acetate):																			
1-Pentyl acetate	$C_7H_{14}O_2$		–	<80	S	11		1	$Q_1(S)$	B	M_2	G	G			fl	–71	150	0,8756
2-Pentyl acetate	$C_7H_{14}O_2$		–	<80	S	11		1	$Q_1(S)$	B	M_2	G	G			fl	–79	134	0,864
3-Pentyl acetate	$C_7H_{14}O_2$		–	<80	S	11		1	$Q_1(S)$	B	M_2	G	G			fl		~135	0,8712
2-Methylbutyl acetate	$C_7H_{14}O_2$		–	<80	S	11		1	$Q_1(S)$	B	M_2	G	G			fl		138	0,8740
3-Methylbutyl acetate	$C_7H_{14}O_2$		–	<80	S	11		1	$Q_1(S)$	B	M_2	G	G			fl	–78	142	0,8670
Acetic acid propyl esters:																			
Isopropyl acetate	$C_5H_{10}O_2$	TA	–	<80	S,Q	62		1	$Q_1(S)$	B	M_2	G	G	F,Xi	200	fl	–73	90	0,872
Propyl acetate	$C_5H_{10}O_2$	TA	–	<80	S,Q	62		1	$Q_1(S)$	B	M_2	G	G	F,Xi	200	fl	–95	102	0,887
Acetic acid vinyl ester	$C_4H_6O_2$	TA	–	<60	S,Q	62		1	$Q_1(S)$	B	M_2	G	G	F	10	fl	–100	73	0,932
Acetone	$(CH_3)_2CO$	TA	–	30	S,Q	62		1	$Q_1(S)$	B	E	G	G	Xi,F,4	1000	fl	–95	56	0,791
	$(CH_3)_2CO$	TA	–	TG	D	53A		1	$Q_1(S)$	A	M_2	G	G	Xi,F,1,4					
Acetone cyanohydrin (ACH)	C_4H_7NO	TA	–	TG	D	53A		1	$Q_1(S)$	B	M_2	G	G	T+,N		fl	–20	95(Z)	0,932
Acetyl acetone	$CH_3COCH_2COCH_3$		–	<Kp	S	11		1	$Q_1(S)$	B	M_2	G	G	Xn		fl	–21	140	0,975
Acetyl chloride	CH_3COCl	TA	–	TG	D	53A		1	$Q_1(V)$	B	M_1	G	G	C,F,2,3		fl	–112	51	1,104
Acetylene	C_2H_2	TA	–	TG	D	53A		1	$Q_1(S)$	B	M_1	G	G	F+,1		ga	–84	–81	(–)
Acetylene chlorides --> *Di-,* --> *Trichloroethylene,* --> *Tetrachloroethane*																			
ACH --> *Acetone cyanohydrin*																			
Acidic tar			–	>F<200	D	53A	(H)	1	$Q_1(V)$	B	M_1	G	G	U		fl			
Acrylic acid	$C_3H_4O_2$	TA	–	<Kp	S,Q	62		1	$Q_1(V)$	B	M_2	G	G	C,N		fl	13	141	1,051
Acrylic esters:																			
Acrylic acid ethyl ester (Ethyl acrylate)	$CH_2CHCO_2C_2H_5$	TA	–	<Kp	S,Q	62		1	$Q_1(S)$	B	M_2	G	G	Xn,Xi,F	5	fl	–71	99	0,924
Acrylic acid methyl ester (Methyl acrylate)	$CH_2CHCO_2CH_3$	TA	–	<Kp	S,Q	62		1	$Q_1(S)$	B	M_2	G	G	Xn,Xi,F	5	fl	–76,5	80	0,956
Acrylonitrile	C_3H_3N	TA	–	TG	D	53A		1	$Q_1(V)$	B	M_1	G	G	T,F,N,R45	*	fl	–82	77	0,806
Adipic acid	$C_6H_{10}O_4$		<L	<Kp,>K	S	11		1	$Q_1(V)$	B	V	G	G	Xi		kr	153	330,5	1,360
			>L	<Kp	S	11		1	Q_1	Q_1	V	G	G						
Alcohol --> *Ethanol*																			
Alkyd resins and lacquers		S	–	<Kp	D	53A		1	$Q_1(V)$	B	M_1	G	G	3,4,U		fl			
Alkylaluminum compounds		S	–	<Kp	D	53A		1	$Q_1(S)$	A	M_1	G	G	C,F,3		fl			0,8...1,8
Allyl alcohol (2-Propene-1-ol)	C_3H_6O	TA	–	<80	D	53A		1	$Q_1(S)$	B	E	G	G	T,N	2	fl	–129	97	0,852
Alum (Potassium aluminum sulphate, 48,4% aqueous solution)	$KAl(SO_4)_2*12H_2O$		<L	<Kp,>K	S	11		1	$Q_1(V)$	B	V		G	C		kr	–16	101	1,76
			>L	<Kp	S	11		1	Q_1	Q_1	V		G						
Aluminum chlorate	$N(ClO_3)_3$		<L	<Kp,>K	D	53A		1	$Q_1(V)$	B	M_1	G	G	3,O		kr			
Aluminum chloride	$AlCl_3$		<L	<30,>K	S,Q	62	QW	1	$Q_1(V)$	B	V	M	M	C,3		kr		183(S)	2,44
	$AlCl_3$		–	>30	D	53A	SW	1	$Q_1(V)$	B	M_1	G	G	C,2,3					
Aluminum fluoride	AlF_3		<L	<30,>K	S	11		1	$Q_1(V)$	B	E	G	G	Xi		kr	1260(S)		2,88
	AlF_3		>L	<Kp	S	02		3	Q_1	Q_1	M_1	M	G						
Aluminum hydroxide diacetate (aluminum acetate basic)			<L	<40	S	11		1	$Q_1(V)$	B	E	G	G	Xi		fl			
Aluminum nitrate	$Al(NO_3)_3$		<L	<Kp,>K	S	11		1	$Q_1(V)$	B	E	G	G	Xi,O		kr	73	135(Z)	
Aluminum sulfate	$Al_2(SO_4)_3$		<L	<Kp,>K	S,Q	62		1	$Q_1(V)$	B	E	G	G	Xn,3,6		kr	770(Z)		2,71

Mechanical seal selection by media

Media					Mechanical seal									Additional information on the medium					
Code of materials and legend see inside of back cover. Please observe the note on page 1.	Chemical formula	Remark	Concentration %	Temp. °C	Arrange-ment	Auxil. piping	Addit. measures	Seal type	Materials to EN 12756 1 Seal face	2 Seal face	3 Sec. seal	4 Spring	5 Others	Hazard warnings	TLV-value	Normal condition	Melting temperature °C	Boiling point °C	Density g/cm³
1		2	3	4	5	6	7	8						10	11	12	13	14	15
Amidosulfuric acid (Amidosulfonic-, Sulfamidic, Sulfamic acid)			<L	<Kp,>K	S	11		1	Q_1(V)	B	M_1	G	G	Xi		kr		205(Z)	2,1
Amines (not specified)		S	–	<Kp	S,Q	62		1	Q_1(V)	B	M_2	G	G	U		fl			
Aminoethanols:																			
1-Aminoethanol	$(CH_2)_2NH_2OH$		<L	<Kp,>K	S	11		1	Q_1(V)	B	M_2	G	G			kr	95...99	110	
2-Aminoethanol (Ethanolamine)	$(CH_2)_2NH_2OH$	TA	–	<Kp	D	53A		1	Q_1(V)	B	M_2	G	G	Xn,C	3	fl	10	171	1,022
Aminosulfonic acid			–	<Kp,>K	D	53A		1	Q_1(V)	B	M_1	G	G	Xi		kr	205(Z)		2,1
Ammonia	NH_3		–	<40	D	53A		1	Q_1(S)	B	E	G	G	T,C,1,N	50	ga	−78	−33	(–)
	NH_3		–	TG	D	53A		1	Q_1(S)	B	M_2	G	G	T,C,1,N					
Ammonia aqu. solutions:																			
Caustic ammonia	NH_4OH		~29	<Kp	D	53A		1	Q_1(S)	B	M_2	G	G	C,N		fl			0,9
Spirits of salmiac	NH_4OH		~10	<40	S,Q	62		1	Q_1(S)	B	E	G	G	C,N		fl			0,957
Ammonium acetate	$H_3CCOONH_4$		<L	<60,>K	S	11		1	Q_1(S)	B	E	G	G			fe	113		1,171
	$H_3CCOONH_4$		<L	<Kp	S	11		1	Q_1(S)	B	M_2	G	G				(Z90 °C)		
Ammonium alum	$NH_4Al(SO_4)_2{*}_{12}H_2O$		<L	<60,>K	S	11		1	Q_1(V)	B	V	G	G			kr	109		1,64
Ammonium bromide	NH_4Br		<L	<Kp,>K	S,Q	11		1	Q_1(V)	B	M_1	G	G	Xi,6		kr	452(S)		2,55
Ammonium carbamate --> *Urea*																			
Ammonium carbonate	$(NH_4)_2CO_3$		<L	<60,>K	S	11		1	Q_1(V)	B	E	G	G	Xn		kr			
Ammonium chloride (Salmiac)	NH_4Cl		<L	<30,>K	S	11		1	Q_1(V)	B	E	G	G	Xn,Xi		kr		338(S)	1,531
	NH_4Cl		<L	<60	S	11		5	Q_1	Q_1	E	M	M						
	NH_4Cl		<L	<Kp	D	53A		1	Q_1(V)	B	M_2	G	G	2					
	NH_4Cl		>L	<Kp	S	01		4	Q_1	Q_1	M_2	M	G						
Ammonium fluorides:																			
Ammonium hydrogen fluoride	$(NH_4)HF_2$		<L	>Kp	D	54		1	Q_1	B	M_2	G	G	T,C,2		kr	126	238(Z)	1,5
Neutral ammonium fluoride	NH_4F		<L	<Kp	D	54		1	Q_1	B	M_2	G	G	T,2		kr	160		1,0
Ammonium hydrogen carbonate	$(NH_4)HCO_3$		<L	<Kp,>K	S	11		1	Q_1(V)	B	E	G	G	Xn		kr	106 (Z60 °C)		1,58
Ammonium hydroxide --> *Ammonia aqu. Solutions*																			
Ammonium nitrate	NH_4NO_3		<L	<Kp,>K	S,Q	62	D	1	Q_1(V)	B	E	G	G	3,O		kr	170		1,73
Ammonium oxalate monohydrate	$(COONH_4)_2{\cdot}H_2O$		<10	<Kp	D	53A		1	Q_1	Q_1	M_2	G	G	Xn,3		kr	70(Z)		1,5
Ammonium persulfate (Ammonium peroxodisulfate)	$(NH_4)_2S_2O_8$		<L	<Kp,>K	S,Q	62		1	Q_1	Q	M_2	G	G	Xn,Xi,3,O		kr	120(Z)		1,98
Ammonium phosfate, secondary	$(NH_4)_2HPO_4$		<L	<60,>K	S	11		1	Q_1(V)	B	E	G	G			kr	155(Z)		1,619
Ammonium sulfate	$(NH_4)_2SO_4$		<L	<Kp,>K	S	11		1	Q_1(V)	B	E	G	G			kr	235...280(Z)		1,77
Ammonium thiocyanate (Ammonium rhodanide)	NH_4SCN	TA	<L	<Kp,>K	S	11		1	Q_1(V)	B	M_1	G	G	Xn		kr	149	170(Z)	1,3
Amyl acetate --> *Acetic acid pentyl esters*																			
Amyl alcohols --> *Pentanols*																			
Aniline dyes		S	–	<80	S	11		1	Q_1(S)	B	M_2	G	G	U		fl			
Aniline hydrochloride (aniline salt)	$C_6H_5NH_3Cl$	TA	<L	<Kp	D	53A		1	Q_1(V)	B	M_1	G	G	T,Xi,R40,2,3,N		kr	198	245	1,22
Aniline, aniline oil	C_6H_7N	TA	–	TG	D	53A		1	Q_1(S)	B	M_2	G	G	T,Xi,R40,3,N	2	fl	–6	184	1,023
Anthracene	$C_{14}H_{10}$	TA	Sch	>F<Kp	S,Q	62	H,D	6	A	Q_1	G	M_6	T4	Xn,6		kr	217	342	1,25
Anthracene oil		TA,G	Sch	>F<Kp	S,Q	62	H,D	6	A	Q_1	G	M_6	T4	T,R45,6		kr			
Antichlor --> *Sodium thiosulfate*																			
Apple juice, sauce, cider, wine		N	–	<Kp	S	11		1	Q_1(S)	B	P	G	G						
Arcton --> *Refrigerants*																			
Argon	Ar		–	>–20	D	53A		1	Q_1(S)	B	M_1	G	G	1		ga	–189	–186	
Aromatic hydrocarbons --> *BTX*																			
Arrack			–	<60	S	11		1	Q_1(S)	B	E	G	G			fl			
Arsenic acid	H_3AsO_4	TA	–	<Kp	D	53A	SW	1	Q_1	Q_1	M_1	G	G	T,R45,2,N	*	fl	35,5	120	2,5
Asphalts (molten)		N	–	<120	S	02	H	1	Q_1(S)	B	V	G	G			fe	70...150	>370	1,0...1,2
			–	<200	S	01	H	1	Q_1(S)	B	M_1	G	G						
			–	>200	S,Q	62	H,D	6	A	Q_1	G	M_6	T4	6					
ASTM test oils No. 1 to 4			–	<100	S	11		1	Q_1(S)	B	V	G	G	U		fl			
Aviation petrol, av. gasoline		TA,G	–	<Kp	S	11		1	Q_1(S)	B	V	G	G	T,Xn,R45		fl	bis <–58	40...160	0,7...0,75

Media					Mechanical seal									Additional information on the medium					
Code of materials and legend see inside of back cover. Please observe the note on page 1.	Chemical formula	Remark	Concentration %	Temp. °C	Arrange-ment	Auxil. piping	Addit. measures	Seal type	Materials to EN 12756 1 Seal face	2 Seal face	3 Sec. seal	4 Spring	5 Others	Hazard warnings	TLV-value	Normal condition	Melting temperature °C	Boiling point °C	Density g/cm³
1		2	3	4	5	6	7	8						10	11	12	13	14	15
B																			
Barium chloride	$BaCl_2$		<L	<60	S,Q	62		1	Q_1(V)	B	V	G	G	T,Xn,6	#0,5	kr	960	1560	3,86
Barium chromate suspension	$BaCrO_4$		<10	<60	S,Q	62	QW	5	Q_1	Q_1	V	G	G	Xn,6	#0,5	kr			4,5
Barium hydroxide	$Ba(OH)_2$		<L	<60	S,Q	62	QW	1	Q_1(V)	B	E	G	G	C,6	#0,5	kr			4,5
	$Ba(OH)_2$		<10	<10	S,Q	62	QW	5	Q_1	Q_1	E	G	G	C,6					
Barium nitrate	$Ba(NO_3)_2$		<L	<80	S,Q	62	QW	1	Q_1(V)	B	V	G	G	Xn,6,O	#0,5	kr	593	600(Z)	3,24
	$Ba(NO_3)_2$		<20	<80	S,Q	62	QW	5	Q_1	Q_1	V	G	G	Xn,6,O					
Battery acid --> *Sulfuric acid*																			
Beer		N	–	<80	S	01		1	Q_1	Q_1	V	G	G			fl			
Beer yeast, -wort, -mash		N	–	<80	S	01		1	Q_1	Q_1	V	G	G			fl			
Beet sugar --> *Saccharose*																			
Benfield solution (30 % K_2CO_3 +3 % DEA + H_2O + CO_2)		G		<110	S	32		X	Q_{32}	Q_3	E	G	G	Xi			~60(K)		1,2...1,3
Benzene	C_6H_6	TA	–	<Kp	D	53A		1	Q_1(S)	B	M_1	G	G	T,Xn,Xi,R45,R46,F,6	*	fl		80	0,879
Benzoic acid	$C_7H_6O_2$		<L	<100	S	11		1	Q_1(S)	B	V	G	G	Xn		kr	122	249	1,266
	$C_7H_6O_2$		<10	<100	S	11		2	Q_1	Q_1	V	G	G						
	$C_7H_6O_2$		–	>F<200	S	02	(H)	3	Q_1	Q_1	M_1	M	G						
Benzotrichloride	$C_7H_5Cl_3$	TA	–	<200	D	53A		1	Q_1	Q_1	M_1	G	G	T,Xn,Xi,R45,2		fl	–4,8	221	1,38
Benzotrifluoride	$C_7H_5F_3$	TA	–	<60	S,Q	62		1	Q_1(V)	B	V	G	G	6,F,N		fl	–29	104	1,189
Benzyl alcohol	C_7H_8O		–	<100	S	11		1	Q_1(S)	B	M_2	G	G	Xn		fl	–15	205	1,045
	C_7H_8O		–	<30	S	11		1	Q_1(S)	B	V	G	G						
Benzyl butyl phthalate (BBP) --> *Phthalic acid esters*																			
Biphenyl	$C_{12}H_{10}$	TA	–	>75<Kp	D	53A		6	A	Q_1	G	M_6	T_4	Xi,3,N	0,2	kr	69	255	1,04
Bitumen		G	–	>F<200	S	01	H	1	Q_1(S)	B	M_1	G	G			fe		>370	0,95...1,1
			–	<200	S	01	H	6	A	Q_1	G	M_6	T_4						
Black liquor --> *Digester liquor, basic*																			
Blast furnace gas			–	<200	D	53A		1	Q_1(V)	B	M_1	G	G	1		ga			
Bleaching earth suspension		G	<10	<100	S	11		5	Q_1	Q_1	V	G	G			fe			
Bleaching lye --> *Sodium hypochlorite,* --> *Calcium hypochlorite*																			
Blood		N	–	<60	S	11		1	Q_1(S)	B	P	G	G			fl			
Boiler feed water --> *Water*																			
Bone fats		N	–	<Kp	S	11		1	Q_1(S)	B	V	G	G			fl			
Borax (Disodium tetraborate)	$Na_2B_4O_7{*}10H_2O$		<L	<60	S	11		1	Q_1(V)	B	P	G	G	Xn,R62		kr	75	1575(Z)	1,72
Boric acid	$B(OH)_3$		<L	<60	S,Q	62		1	Q_1(V)	B	V	G	G	T,6		kr	169(Z)		1,52
Boron trichloride (Trichloroborane)	BCl_3		–	TG	D	53A		1	Q_1(V)	B	M_1	G	G	T+,C,1		ga	–107	12,5	1,43 (0°C)
Boron trifluoride (Trifluoroborane)	BF_3		–	TG	D	53A		1	Q_1	Q_1	M_1	G	G	T+,C,1	1	ga	–127	–100	(+)
Brackish water --> *Water*																			
Bread dough		N			D	53A		1	Q_1(S)	B	V	G	G						
Brine --> *Sodium chloride*																			
Bromic acid	$HBrO_3$		–	<Kp	D	53A		1	Q_1	Q_1	M_1	G	G	T,C,2,6		fl			
Bromine	Br_2		–	<Kp	D	53A		1	Q_1	Q_1	M_1	G	G	T+,C,2,3,N	0,1	fl	–7	58	3,12
Bromine, aqueous (aqueous solution of bromine)	Br_2		<L	<Kp	D	53A		1	Q_1	Q_1	M_1	G	G	T+,C,3,6,N		fl			
BTX (benzene-toluene-xylene mixture)		TA	–	<Kp	S,Q	62		1	Q_1(S)	B	M_1	G	G	T,Xn,Xi,R45,R46,R63,6,F	*	fl			
Bunker oil and fuel		TA/N	–	120	S	11		1	Q_1(S)	B	V	G	G	T,R45		fl			
1,3-Butadiene		TA	–	TG	D	53A		1	Q_1(S)	B	V	G	G	T,R45,R46,1,3,6,F+	*	ga	–109	–4,5	(+)
Butanal --> Butyraldehyde																			
Butane:																			
Isobutane (2-methyl propane)	C_4H_{10}	TA	–	<Kp	S,Q	62		1	Q_1(S)	A	V	G	G	4,F+	1000	ga	–159	–12	(–)
n-Butane	C_4H_{10}	TA	–	<Kp	S,Q	62		1	Q_1(S)	A	V	G	G	4,F+	1000	ga	–135	–1	(–)
Butanediols (Butylene glycols):																			
1,2-Butanediol	$C_4H_{10}O_2$		–	<Kp	S	11		1	Q_1(S)	B	M_1	G	G			fl	–114	192	1,019
1,3-Butanediol	$C_4H_{10}O_2$		–	<Kp	S	11		1	Q_1(S)	B	M_1	G	G			fl	<–50	207	1,005
1,4-Butanediol	$C_4H_{10}O_2$		–	<200	S	11		1	Q_1(S)	B	M_1	G	G	Xn		fl	20	230	1,020
2,3-Butanediol	$C_4H_{10}O_2$		–	<Kp	S	11		1	Q_1(S)	B	M_1	G	G			fl	19	182	1,033
Butanic acid --> *Butyric acid*																			

Mechanical seal selection by media

Media					Mechanical seal									Additional information on the medium					
Code of materials and legend see inside of back cover. Please observe the note on page 1.	Chemical formula	Remark	Concentration %	Temp. °C	Arrange-ment	Auxil. piping	Addit. measures	Seal type	Materials to EN 12756 1 Seal face	2 Seal face	3 Sec. seal	4 Spring	5 Others	Hazard warnings	TLV-value	Normal condition	Melting temperature °C	Boiling point °C	Density g/cm³
1		2	3	4	5	6	7	8						10	11	12	13	14	15
Butanol:																			
1-Butanol	$C_4H_{10}O$		–	<60	S	11		1	Q_1(S)	B	E	G	G	Xn,Xi	100	fl	–90	118	0,813
2-Butanol	$C_4H_{10}O$	TA	–	<80	S	11		1	Q_1(S)	B	E	G	G	Xi	100	fl	–115	100	0,811
Isobutanol	$C_4H_{10}O$		–	<60	S	11		1	Q_1(S)	B	E	G	G	Xi	100	fl	–108	108	0,806
tert. Butyl alcohol	$C_4H_{10}O$	TA	–	<60,<K	S	11		1	Q_1	B	E	G	G	Xn,F	100	kr	26	82	0,776
Butanone (Ethyl methyl ketone)	C_4H_8O		–	<Kp	S	11		1	Q_1	B	M_2	G	G	7	200	fl	–86	80	0,805
Butene (Butylene):																			
1-Butene	C_4H_8	TA	–	<Kp	S,Q	62		6	A	Q_1	U_1	T_1	G_1	4,5,F+		ga	–185	–7	(–)
cis-2-Butene	C_4H_8	TA	–	<Kp	S,Q	62		6	A	Q_1	U_1	T_1	G_1	4,5,F+		ga	–139	3	(–)
Isobutene	C_4H_8	TA	–	<Kp	S,Q	62		6	A	Q_1	U_1	T_1	G_1	4,5,F+		ga	–140	–7	(–)
trans-2-Butene	C_4H_8	TA	–	<Kp	S,Q	62		6	A	Q_1	U_1	T_1	G_1	4,5,F+		ga	–105	1	(–)
Butter		N	–	<80	S	11		1	Q_1(S)	B	P	G	G			pa			
Buttermilk		N	–	<80	S	11		1	Q_1(S)	B	P	G	G			fl			
Butyl acetate --> *Acetic acid esters*																			
Butyl alcohol --> *Butanol*																			
Butylamines:																			
1-Butylamine (1-Aminobutane)	$C_4H_{11}N$	TA	–	<Kp	S,Q	62		1	Q_1	B	M_1	G	G	Xn,C,F,3,6	5	fl	–50	78	0,733
Isobutylamine (2-Methyl-1-propylamine)	$C_4H_{11}N$	TA	–	<Kp	S,Q	62		1	Q_1	B	M_1	G	G	C,F,3,6	5	fl	–85	66	0,736
sec. Butylamine (2-Aminobutane)	$C_4H_{11}N$	TA	–	<Kp	S,Q	62		1	Q_1	B	M_1	G	G	Xn,C,F,3,6,N	5	fl	–104	63	0,724
Butylene --> *Butene*																			
Butyraldehydes:																			
Butyraldehyde (Butanal)	C_4H_8O		–	<Kp	S,Q	62		1	Q_1(V)	B	M_2	G	G	3,6,F		fl	–99	75	0,802
Isobutyraldehyde (2- Methylpropanal)	C_4H_8O		–	<Kp	S,Q	62		1	Q_1(V)	B	M_2	G	G	3,6,F		fl	–66	64	0,794
Butyrates --> *Butyric acid esters*																			
Butyric acid:																			
Isobutyric acid	$C_4H_8O_2$		–	<60	S	11		1	Q_1(S)	B	M_1	G	G	C		fl	–47	155	0,950
n-Butyric acid	$C_4H_8O_2$		–	<60	S	11		1	Q_1(S)	B	M_1	G	G	C		fl	–6	163	0,959
Butyric acid esters (Butyrates)		S	–	<100	S	11		1	Q_1(S)	B	M_2	G	G	U		fl	<0	<100	
C																			
Cable sealing compounds		S S	– –	<220 >220	S S	02 02	H H	6 6	A A	Q_1 Q_1	U_1 G	M_6 M_6	G_1 T_4			fe fe			
Calcium acetate	$Ca(OCOCH_3)_2$		<L	<100	S	11		1	Q_1(V)	B	E	G	G			fe	160(Z)		1,50
Calcium bisulfite (lye) --> *Calcium hydrogen sulfite*																			
Calcium carbonate --> *Lime powder suspension*																			
Calcium chlorate	$Ca(ClO_3)_2$		<L	<100	S,Q	62		1	Q_1(V)	B	V	G	G	6,O		kr	340(Z)		2,711
Calcium chloride	$CaCl_2$ $CaCl_2$		<L <L	<25 <100	S S,Q	11 62		1 1	Q_1(V) Q_1(V)	B B	V M_1	G M	G M	Xi,3,6		kr	782	>1600	1,68
Calcium hydrogen sulfite ('Digester lye')	$Ca(HSO_3)_2$ $Ca(HSO_3)_2$	V V	L L	<Kp <Kp	D S,Q	53A 01	kD	1 3	Q_1(V) Q_1	B Q_1	M_1 M_1	G G	G G	3,6 3,6		fl fl			
Calcium hydroxide --> *Hydrated lime*																			
Calcium hypochlorite	$Ca(OCl)_2$ $Ca(OCl)_2$		<L –	<30 > <Kp	S,Q S,Q	62 62		1 4	Q_1(V) Q_1	Q_1(V) Q_1	M_2 M_2	M M	M G	Xn,C,2,6,O,N Xn,C,2,6,O,N		kr	100(Z)		2,35
Calcium nitrate	$Ca(NO_3)_2$ $Ca(NO_3)_2$		<L	<Kp <100	S,Q S	62 62		1 5	Q_1(S) Q_1	B Q_1	V V	G G	G G	Xi,6,O Xi,6,O		kr	45		1,82
Calcium phosphates (sludges)	$Ca(PO_4)_2$	G	F25	<Kp	S	01	kD	3	Q_1	Q_1	M_1	G	G			kr	1670		3,14
Calcium sulfate (suspension)	$CaSO_4$		F25	<Kp	S	01	kD	3	Q_1	Q_1	V	G	G			kr			
Calgon (Polyphosphates), Calfort		®	<L	<Kp	S	11		1	Q_1(V)	B	E	G	G			kr			
Calgonit R (Sodium phosphate silicates)		®	<L	<Kp	S	11		1	Q_1(V)	B	E	G	G			kr			
Calgonit S (Urea nitrate)	$CH_5N_3O_4$	®	<L	<Kp	S	11		1	Q_1(V)	B	E	G	G			kr	152(Z)		1,69
Cane sugar (solution)			<L	<Kp	D	53A		1	Q_1(S)	B	V	G	G	3,4		fl			
Caprolactam, ε-	$C_6H_{11}NO$ $C_6H_{11}NO$	TA TA	<L	<Kp <200	S,Q S	62 01	H	1 6	Q_1(S) Q_1	B Q_1	M_1 U_1	G M_6	G G_1	Xn,Xi,6	5 mg	kr	69	268	1,013(80)
Carbamates (Urethanes)		TA,S N	F<5 –	<180 <200	D D	53A 53A	(H)	1 1	Q_1 Q_1(S)	B A	M_2 M_1	G G	G G	T,Xi,3,6		fl			
Carbamides --> *Urea*																			
Carbolic acid --> *Phenol*																			
Carbon dioxide (aqueous solution)	CO_2		<L	<Kp	S	11		1	Q_1(S)	B	P	G	G			fl			

Media					Mechanical seal									Additional information on the medium					
Code of materials and legend see inside of back cover. Please observe the note on page 1.	Chemical formula	Remark	Concentration %	Temp. °C	Arrange-ment	Auxil. piping	Addit. measures	Seal type	Materials to EN 12756 1 Seal face	2 Seal face	3 Sec. seal	4 Spring	5 Others	Hazard warnings	TLV-value	Normal condition	Melting temperature °C	Boiling point °C	Density g/cm³
1		2	3	4	5	6	7	8						10	11	12	13	14	15
Carbon dioxide (gas)	CO_2		–	<60	D	53A		1	Q_1(S)	B	P	G	G	1	5000	ga		–78(S)	(+)
Carbon dioxide (liquefied, min. 3 bar above PD)	CO_2		–	<Kp	S,Q	11		X	Q_1	A	P	G	G	4,6	5000	fl			0,766
Carbon disulfide	CS_2	TA	–	<Kp	D	62		1	Q_1	Q_1	M_1	G	G	T,Xi,R62,R63,F,3	10	fl	–111	46	1,261
Carbon monoxide	CO		–	<60	D	53A		1	Q_1(S)	B	P	G	G	T,1,4,F+	30	ga	–205	–191	(–)
Carbon tetrachloride (Tetrachloromethane)	CCl_4	TA	–	<60	S,Q	62		1	Q_1(V)	B	V	G	G	T,R40,N	10	fl	–23	76	1,5924
Castor oil			–	<100	S	11		1	Q_1(S)	B	V	G	G			fl	–10 ... –18		0,96
Caustic ammonia --> *Ammonia aqu. Solutions*																			
Caustic potash solution (Potassium hydroxide in aqueous solution)	KOH KOH KOH		<10 <20 –	<25 <60 <Kp	S S D	11 11 53A		1 5 1	Q_1 Q_1 Q_1	Q_1 Q_1 Q_1	E E M_2	G G G	G G G	C,Xn C,Xn C,Xn,2,4		fl fl fl			
Caustic soda solution (Sodium hydroxide in aqueous solution)	NaOH NaOH NaOH NaOH NaOH NaOH		<10 <20 <50 <50 <50 <50	<80>K <100>K <100>K <100>K <100>K <180	S,Q S,Q S,Q S,Q D D	62 62 62 62 53A 53A	 QW QW SW SW	5 5 5 1 1 1	Q_1 Q_1 Q_1 Q_1 Q_1 Q_1	Q_1 Q_1 Q_1 Q_1 Q_1 Q_1	E E E E E M_2	G G G G G G	G G G G G G	C C C,3 C,3 C,3 C,2			10%~10 20%~25 30%~0 40%~15 50%~12 60%~50	10%~105 20%~110 30%~120 40%~130 50%~150 60%~160	10% 1,109 20% 1,219 30% 1,327 40% 1,430 50% 1,524 60% 1,109
Cellosolve (Ethylene glyol monoethyl ether)	$C_4H_{10}O_2$	TA,®	–	<Kp	S,Q	62		1	Q_1(S)	B	M_1	G	G	T,Xn,R60	20	fl	–100	135	0,9311
Cellulose --> *Pulp*																			
Cement sludge			<60	<40	S,Q	62	kD	3	Q_1	Q_1	V	G	G	3,6					
Cheese (cream)		N	–	<60	D	53A		1	Q_1	Q_1	V	G	G	4		pa			
Chemical pulp --> *Cellulose*																			
Chinese wood oil --> *Wood oil*																			
Chloroacetic acid	$C_2H_3ClO_2$	TA	<L	<100	D	53A	SW	1	Q_1(V)	B	M_2	G	G	T,C,2,N		kr	61	188	1,40
Chlorinated biphenyls		TA,S	–	<60	D	53A		1	Q_1(V)	B	M_1	G	G	T	0,2	fl			
Chlorine	Cl_2		–	<60	D	54		1	Q_1	Q_1	M_1	G	G	T,Xi,1,2,3,6,N	0,5	ga	–101	–34	(+)
Chlorine bleaching lye --> *Sodium hypochlorite, Calcium hypochlorite*																			
Chlorine dioxide	ClO_2		–	<60	D	53A	SW	1	Q_1	Q_1	M_1	G	G	T+,C,1,2,6,O,N	0,1	ga	–59	11	(+)
Chlorine lye --> *Sodium hypochlorite*																			
Chlorine water	Cl_2+H_2O		L	<Kp	D	54		1	Q_1(V)	B	M_1	G	G	C,2,6		fl			
Chloroacetone (1-Chlorine-2-propanone)	C_3H_5ClO	TA	–	<60	S,Q	62		1	Q_1(V)	B	M_1	G	G	T,3,N		fl	–44	119	1,123
Chlorobenzene	C_6H_5Cl	TA	–	<Kp	D	53A		1	Q_1(V)	B	M_1	G	G	Xn,N	50	fl	–46	132	1,106
Chlorofluorocarbons (CFC) --> *Refrigerants*																			
Chloroform	$CHCl_3$	TA	–	<Kp	D	62		1	Q_1(S)	B	M_1	G	G	Xn,Xi,R40	10	fl	–63	61	1,48
Chloromethane --> *Methyl chloride*																			
Chloropicrine --> *Trichloronitromethane*																			
Chlorosulfuric acid (Chlorosulfonic acid)	$HOSO_2Cl$		–	<Kp	D	54		1	Q_1	Q_1	M_1	G	G	C,Xi		fl	–80	152(Z)	1,75
Chlorothene --> *Trichloroethane*																			
Chrome alum (Potassium chrome alum)	$KCr(SO_4)_2*12H_2O$		<L	<Kp	S,Q	62		1	Q_1(V)	B	M_1	G	G	6		kr	89		1,83
Chromic acid (Chromic anyhydride) --> *Chromium trioxide*																			
Chromium trioxide	CrO_3		<L	<Kp	D	53A		1	Q_1	Q_1	M_1	G	G	T+,C,R45,R46,R62,2,6,O,N	mg 0,1	kr	197	>230(Z)	2,7
Citric acid	$C_6H_8O_7$		<L	<Kp	S	11		1	Q_1(S)	B	V	G	G	Xi		kr	153	200(Z)	1,66
Citrus juices		N	–	<Kp	S	11		1	Q_1(S)	B	V	G	G			fl			
Claircе --> *Sugar juices*																			
Clophen --> *Chlorinated biphenyls*																			
Coal sludge				<60	S	32		1	U_1	U_1	P	G	G			pa			
Coal tar (remove leakage selectively)		TA,G	–	<180	S,Q	11	(H)	1	Q_1(S)	B	M_1	G	G	T,R45,1,6	*	fl		1,1...1,2	
Cocoa butter (Cacao butter)		N	Sch	<100	S	11		1	Q_1(S)	B	V	G	G			pa	33...35		0,975

Mechanical seal selection by media

Media					Mechanical seal										Additional information on the medium					
Code of materials and legend see inside of back cover. Please observe the note on page 1.	Chemical formula	Remark	Concentration %	Temp. °C	Arrange-ment	Auxil. piping	Addit. measures	Seal type	Materials to EN 12756 1 Seal face	2 Seal face	3 Sec. seal	4 Spring	5 Others	Hazard warnings	TLV-value	Normal condition	Melting temperature °C	Boiling point °C	Density g/cm³
1		2	3	4	5	6	7	8						10	11	12	13	14	15
Coconut fat		N	–	>30<TG	S	11		1	Q_1(S)	B	V	G	G			pa	20...23		0,88...0,9
Coconut oil		N	–	<160	S	11		1	Q_1(S)	B	V	G	G			fl			
Cod-liver oil		N	–	<Kp	S	11		1	Q_1(S)	B	V	G	G			fl			0,92...0,93
Coffee (extract)		N	L	<60	S	11		1	Q_1	Q_1	V	G	G			fe			
Coin		®	–	<30	S	11		1	Q_1(S)	B	V	G	G			fl			
Coke oven gas			–	<160	D	53A		1	Q_1(V)	B	V	G	G	1,U	*	ga			
Cold zinc paint		G	<L	<60	D	53A		1	Q_1(S)	B	E	G	G	3,4		fe			
Colza oil (Rapeseed oil)		N	–	<100	S	11		1	Q_1(S)	B	V	G	G			fl	–10...–2	350	0,91
Condensed milk		N	–	<Kp	S	11		1	Q_1(S)	B	V	G	G			fl			
Cooling brine --> *Calcium chloride*																			
Copper (II) acetate	$C_4H_6CuO_4$		<L	<40	S	11		1	Q_1(V)	B	E	G	G	Xn		kr	115	~240(Z)	1,882
Copper chlorides:																			
Copper chloride	CuCl		<L	<Kp	D	53A		1	Q_1(V)	B	E	G	G	Xn,N,2,3		kr	430	1490	4,14
Copper (II) chloride	$CuCl_2$		<L	<Kp	D	53A		1	Q_1(V)	B	E	G	G	Xn,N,2,3		kr	>300(Z)		3,386
Copper (I) cyanide suspension		TA	<10	<Kp	D	53A		1	Q_1(V)	B	M_1	G	G	T+,N	5	kr	473		2,92
Copper (II) nitrate	$Cu(NO_3)_2$		<L	<60	S	11		5	Q_1	Q_1	E	G	G	Xn,O		kr		>150(S)	
	$Cu(NO_3)_2$		<L	<Kp	D	53A		1	Q_1	Q_1	M_2	G	G	Xn,O					
Corn mash		N	–	<Kp	S	11		1	Q_1(S)	B	V	G	G			fl			
Corn oil		N	–	<100	S	11		1	Q_1(S)	B	V	G	G			fl	–18...–10		0,91...0,93
Cottonseed oil		N	–	<120	S	11		1	Q_1(S)	B	V	G	G			fl	–2		0,92
Cream		N	–	<60	S	11		1	Q_1(S)	B	V	G	G			fl			
Creosot		TA	–	<Kp	S	11		1	Q_1(S)	B	M_1	G	G	T,R45		fl	<–20	200...220	1,08...1,09
Cresols:																			
m-Cresol	C_7H_8O	TA	Sch	<Kp	D	53A		1	Q_1(V)	A	M_1	G	G	T,C	5	kr	31	191	1,05
o-Cresol	C_7H_8O	TA		<Kp	D	53A		1	Q_1(V)	A	M_1	G	G	T,C	5	fl	11	203	1,03
p-Cresol	C_7H_8O	TA	Sch	<Kp	D	53A		1	Q_1(V)	A	M_1	G	G	T,C	5	fe	36	202	1,018
Crude oil, free from solid particles		TA,N	–	<100	S	11		1	Q_1(S)	B	V	G	G	T,R45		fl			
Crude oil, refined		TA,N	–	<80	S	11		1	Q_1(S)	B	V	G	G	T,R45		fl			
Crude oil, with sand		TA,N	–	<100	S	11		1	Q_1	Q_1	V	G	G	T,R45		fl			
Crude oil + salt water		TA,N	–	<25	S	11		1	Q_1(V)	B	V	G	G	T,R45		fl			
Crude soap			–	>F<100	S	11		1	Q_1(S)	B	V	G	G			fl			
Cryolith (suspension)	$Na_3(AlF_6)$		<30	<Kp	S	02	kD	3	Q_1	Q_1	E	G	G	T,Xn,N		kr	~1000		2,95
Cumene (Isopropylbenzene)	C_9H_{12}	TA	–	<Kp	D	53A		1	Q_1(V)	B	M_1	G	G	Xn,N	50	fl	–96	152 ... 153	0,864
Cupric sulphate (Blue vitriol)	$CuSO_4{}^*5H_2O$		<L	<Kp	S	11		5	Q_1	Q_1	E	G	G	Xn		kr	560(Z)		3,603
Curd		N	–	<60	S	11		1	Q_1(S)	B	V	G	G			pa			
Cutting fluid --> *Metal working lubricants*																			
Cyanide of potassium --> *Potassium cyanide*																			
Cyclohexane	C_6H_{12}	TA	–	<Kp	S	11		1	Q_1(S)	B	V	G	G	F,Xn,Xi,N	300	fl	7	80	0,788
Cyclohexanol	$C_6H_{12}O$		–	>F<Kp	S,Q	62		1	Q_1(S)	B	M_1	G	G	Xn,Xi,6	50	fe	25	161	0,962
Cyclohexanone	$C_6H_{10}O$		–	<Kp	S,Q	62		1	Q_1(S)	B	M_1	G	G	Xn	*	fl	–26	155	0,964
Cyclopentadiene	C_5H_6	TA	–	<Kp	S,Q	62		1	Q_1(S)	B	M_1	G	G	1,6	75	fl	–97	40	0,802
Cymene, p-; (1-Isopropyl-4-methyl-benzene)	$C_{10}H_{14}$		–	<60	S	11		1	Q_1(V)	B	V	G	G	Xi		fl	–68	177	0,86
D																			
Decahydronaphthalene --> *Decalin*																			
Decalin (Decahydronaphthalene):	$C_{10}H_{18}$																		
cis-Decalin	$C_{10}H_{18}$	TA	–	<Kp	S,Q	62		1	Q_1(S)	B	M_1	G	G	C,N		fl	–43	196	0,896
trans-Decalin	$C_{10}H_{18}$	TA	–	<Kp	S,Q	62		1	Q_1(S)	B	M_1	G	G	C,N		fl	–30	187	0,870
Denatured alcohol --> *Ethanol*																			
Desalinated water --> *Water*																			
Desmodur R		®	–	<Kp	D	53A		1	Q_1(S)	B	M_1	G	G	Xn,U		fl			
Desmodur T		TA,®	–	<Kp	D	53A		1	Q_1(S)	B	M_1	G	G	T+,Xi,R40		fl	21	251	1,22
Desmophen		®	–	<Kp	D	53A		1	Q_1(S)	B	M_1	G	G	U		fl			
Detergents		S			S	11		1	Q_1(S)	B	V	G	G						
Dextrin (Starch gum)		G	<L	<Kp	D	53A		1	Q_1(S)	B	V	G	G			fe			
Dextrose --> *Glucose*																			

Media					Mechanical seal										Additional information on the medium					
Code of materials and legend see inside of back cover. Please observe the note on page 1.	Chemical formula	Remark	Concentration %	Temp. °C	Arrange-ment	Auxil. piping	Addit. measures	Seal type	Materials to EN 12756 1 Seal face	2 Seal face	3 Sec. seal	4 Spring	5 Others	Hazard warnings	TLV-value	Normal condition	Melting temperature °C	Boiling point °C	Density g/cm³
1		2	3	4	5	6	7	8						10	11	12	13	14	15
Diacetone alcohol (4-Hydroxy-4-methyl-2-pentanone)	$C_6H_{12}O_2$		–	<Kp	S,Q	62		1	Q_1(S)	B	M_1	G	G	Xi,6	50	fl	–47	168	0,93
Diallyl phthalate --> *Phthalic acid esters*																			
Diammonium hydrogen phosphate --> *Ammonium phosphate, secondary*																			
Dibromoethane (Ethylene bromide)	$C_2H_4Br_2$		–	<100	D	53A		1	Q_1(V)	B	M_2	G	G	T,Xi,R45,N	*	fl	10	132	2,2
Dibutyl ether	$C_8H_{18}O$		–	<Kp	S,Q	62		1	Q_1(V)	B	M_1	G	G	R,6		fl	–98	142	0,769
Dibutyl phthalate (DBP) --> *Phthalic acid esters*																			
Dichlorobenzenes:																			
1,2-Dichlorobenzene (ortho-dichlorobenzene)	$C_6H_4Cl_2$	TA	–	<Kp	S,Q	62		1	Q_1(S)	B	M_1	G	G	Xn,Xi,N	50	fl	–17	180	1,306
1,3-Dichlorobenzene (meta-dichlorobenzene)	$C_6H_4Cl_2$	TA	–	<Kp	S,Q	11		1	Q_1(S)	B	M_1	G	G	Xn,N		fl	–25	173	1,288
1,4-Dichlorobenzene (para-dichlorobenzene)	$C_6H_4Cl_2$	TA	–	>F<Kp	S,Q	62		1	Q_1(S)	B	M_1	G	G	Xn,Xi,R40,N	50	fe	53	174	1,46
Dichloroethanes:																			
1,1-Dichloroethane	$C_6H_4Cl_2$	TA	–	<Kp	S,Q	62		1	Q_1(V)	B	M_1	G	G	Xn,Xi,F	100	fl	–97	57	1,175
1,2-Dichloroethane	$C_6H_4Cl_2$	TA	–	<Kp	S,Q	62		1	Q_1(V)	B	M_1	G	G	T,Xn,Xi,R45,F	*	fl	–36	83	1,26
Dichloroethenes:																			
1,1-Dichloroethene	$C_6H_4Cl_2$	TA	–	<Kp	D	53A		1	Q_1(S)	B	V	G	G	Xn,R40,3,F+	2	fl	–122	32	1,213
1,2-Dichloroethene (cis-)	$C_6H_4Cl_2$	TA	–	<Kp	S	11		1	Q_1(S)	B	V	G	G	Xn,F,N	200	fl	–81	60	1,284
1,2-Dichloroethene (trans-)	$C_6H_4Cl_2$	TA	–	<Kp	S	11		1	Q_1(S)	B	V	G	G	Xn,F,N	200	fl	–50	47*	1,257
Dichloromethan --> *Methylene chloride*																			
Didecyl phthalat --> *Phthalic acid esters*																			
Diesel fuel		TA,G	–	<80	S	11		1	Q_1(S)	B	V	G	G			fl		170...390	0,83...0,88
Diethanolamine (DEA, 2,2'-Iminodiethanol)	$C_4H_{11}NO_2$		–	>F<180	S	11		1	Q_1(V)	B	M_2	G	G	Xn,Xi		kr	28	268	1,093
Diethyl ether ('Ether', Ethyl ether)	$C_4H_{10}O$	TA	–	<Kp	S,Q	11		1	Q_1(S)	B	M_2	G	G	Xn,F+		fl	–116	34	0,715
Diethyl phthalate (DEP) --> *Phthalic acid esters*																			
Diethylamine	$(H_5C_2)_2NH$	TA	–	<Kp	S,Q	62		1	Q_1(V)	B	M_2	G	G	Xn,C,F	10	fl	–50	55	0,711
Diethylene glycol --> *Ethylene glycols*																			
Diethylenetriamine	$C_4H_{13}N_3$	TA	–	<180	S	11		1	Q_1(V)	B	M_2	G	G	Xn,C		fl	–39	207	0,959
Digester liquor, acidic		V		<140	S	02	kD	3	Q_1	Q_1	V	M	G			fl			
(Sulfite chemical pulp)		V		>140	D	53A		1	Q_1(V)	B	M_2	G	G	1,4					
Digester liquor, basic		V		<120	S	02	kD	3	Q_1	Q_1	E	M	G			fl			
(Sulfate chemical pulp)		V		>120	D	53A		1	Q_1(V)	B	M_2	G	G	1,4					
Diglycolic acid (2.2'-Oxydiacetic acid)	$C_4H_6O_5$		<L	<60	S	11		1	Q_1(V)	B	E	G	G	Xn,Xi		fe	148		
Diisobutyl phthalate (DIBP) --> *Phthalic acid esters*																			
Diisodecyl phthalate (DIDP) --> *Phthalic acid esters*																			
Diisononyl phthalate (DINP) --> *Phthalic acid esters*																			
Diisooctyl phthalate (DIOP) --> *Phthalic acid esters*																			
Diluents (solvents for paints and lacquers)		S	–	<40	S	11		1	Q_1(S)	A	M_1	G	G	U		fl			
Dimethyl formamide (DMF)	C_3H_7NO	TA	–	<Kp	S,Q	62		1	Q_1(S)	B	M_2	G	G	T,Xn,Xi	10	fl	–61	153	0,9445
Di-(methyl glycol)-phthalate --> *Phthalic acid esters*																			
Dimethyl phthalate (DMP) --> *Phthalic acid esters*																			
Dimethyl sulfate	$C_2H_6O_4S$	TA	–	<Kp	D	53A		1	Q_1(S)	B	M_1	G	G	T+,C,R45	*	fl	–32	191	1,33
Dimethyl sulfoxide (DMSO)	C_2H_6OS		–	<60	S	11		1	Q_1(S)	B	V	G	G			fl	19	189	1,104
Dimethyl terephthalate (DMT)	$C_{10}H_{10}O_4$		<L	<60	S	11		1	Q_1(S)	B	M_1	G	G			kr	141	282	1,35
	$C_{10}H_{10}O_4$		Sch	>F<Kp	S	01	(H)	6	A	Q1	G	M_6	T_4						
Dinonyl phthalate --> *Phthalic acid esters*																			
Dioctyl phthalate (DOP) --> *Phthalic acid esters*																			
Dipentene	$C_{10}H_{16}$	TA	–	<60	S	11		1	Q_1(S)	B	V	G	G	Xi,N		fl	–95	178	0,841

Mechanical seal selection by media

Media					Mechanical seal									Additional information on the medium					
Code of materials and legend see inside of back cover. Please observe the note on page 1.	Chemical formula	Remark	Concentration %	Temp. °C	Arrange-ment	Auxil. piping	Addit. measures	Seal type	Materials to EN 12756 1 Seal face	2 Seal face	3 Sec. seal	4 Spring	5 Others	Hazard warnings	TLV-value	Normal condition	Melting temperature °C	Boiling point °C	Density g/cm³
1		2	3	4	5	6	7	8						10	11	12	13	14	15
Dipentyl phthalate --> *Phthalic acid esters*																			
Diphenyl, diphenyl oxide --> *Heat transfer oils*																			
Diphyl --> *Heat transfer oils*		®																	
Distilled water --> *Water*																			
Disulfurdecafluoride --> *Sulfur fluorides*																			
Disulfur dichloride --> *Sulfur chlorides*																			
Disulfur difluoride --> *Sulfur fluorides*																			
Divinylbenzene (m-), (Vinylstyrene)	$C_{10}H_{10}$	TA	–	<Kp	S,Q	62		1	Q_1(V)	B	M_1	G	G	Xi,N		fl	–67	199	0,9289
Dodecyl benzene	$C_{18}H_{30}$		–	<60	S	11		1	Q_1(S)	B	V	G	G			fl	–7	331	0,863
Dowtherm --> *Heat transfer oils*		®																	
Drinking water, industrial water --> *Water*																			
Dye liquor with bleaching additives		G	–	<160	S	11		1	Q_1	B	M_1	G	G			fl			
Dye liquor without bleaching additives		G	–	<140	S	11		1	Q_1(S)	B	V	G	G			fl			
E																			
Edible oil		N	–	<100	S	11		1	Q_1(S)	B	V	G	G			fl			
Egg liqueur		N	–	<Kp	D	53A		1	Q_1(S)	B	V	G	G	3,4		fl			
Egg yolk		N	–	<Kp	S,Q	62		1	Q_1(S)	B	V	G	G	3,4		fl			1,08
Electrophoretic varnishes		G	Sus		D			X	Q_1	Q_1	V	T_6	F						
Enamel slip			Sus	<40	D	53A		5	Q_1	Q_1	P	G	G	4					
Engobes (special clays)			Sus	<40	D	53A		5	Q_1	Q_1	P	G	G	4					
Epichlorohydrine (ECH)	C_3H_5ClO	TA	–	<Kp	D	53A		1	Q_1(S)	B	M_2	G	G	T,C,R45	*	fl	–48	117	1,18
Epoxy resins and lacquers		TA	Sus	<Kp	D	53A		1	Q_1(V)	B	M_1	G	G	Xi,3,4,N		fl			
Essential oils --> *Volatile oils*																			
Essotherm --> *Heat transfer oils*		®																	
Esters (not specified); also refer to --> *Acetic acid esters*		S	–	<Kp,TG	S,Q	53A		1	Q_1(S)	B	M_2	G	G	(F),U		fl			
Ethanal --> *Acetaldehyde*																			
Ethane	C_2H_6	TA	–	<60	D	53A		1	Q_1(S)	B	V	G	G	F+,1		ga	–183	–88	(+)
Ethanediamine --> *Ethylenediamine*																			
Ethanediol --> *Ethylene glycol*																			
Ethanol	C_2H_5OH	TA	–	<Kp	S	11		1	Q_1(S)	B	E	G	G	F	1000	fl	–114	78	0,794
Ethanolamines --> *Amino ethanols*																			
Ethene --> *Ethylene*																			
Ethenyl ... --> *Vinyl ...*																			
Ether --> Diethyl ether																			
Ether sulfates		S	–	<60	S	11		1	Q_1(S)	B	V	G	G	U		fl			
Ethyl acetate --> *Acetic acid ethyl ester*																			
Ethyl acetoacetate	$CH_3COCH_2CO_2C_2H_5$		–	100	S	11		1	Q_1(V)	B	M_2	G	G	Xi		fl	–45	180	1,025
Ethyl acrylate --> *Acrylic esters*																			
Ethyl alcohol --> *Ethanol*																			
Ethylamine (Aminoethane)	C_2H_7N	TA	–	<60	D	53A		1	Q_1(S)	B	E	G	G	F+,Xi,1	10	ga	–80	17	(+)
Ethylbenzene	C_8H_{10}		–	<Kp	S,Q	62		1	Q_1(S)	B	M_1	G	G	Xn,F	100	fl	–94	136	0,867
Ethylchloride (Chloroethane)	C_2H_5Cl	TA	–	<60	D	53A		1	Q_1(V)	B	M_1	G	G	Xn,R40,F+,1	1000	ga		–138	12(+)
Ethylene (Ethene)	C_2H_4	TA	–	<–20	D	53A	ThE	6	A	Q_1	G	M_6	M	F+,1		ga	–169	–104	(–)
Ethylene bromide --> *Dibromoethane*																			
Ethylene chloride --> *Dichloroethenes*																			
Ethylene chlorohydrin (2-Chloroethanol)	C_2H_5ClO	TA	–	<Kp	D	53A		1	Q_1(S)	B	M_1	G	G	T+	1	fl	–70	129	1,21
Ethylenediamine	$C_2H_8N_2$	TA	–	<60	S,Q	62		1	Q_1(S)	B	E	G	G	Xn,C	10	fl	9	116	0,9

Media					Mechanical seal									Additional information on the medium					
Code of materials and legend see inside of back cover. Please observe the note on page 1.	Chemical formula	Remark	Concentration %	Temp. °C	Arrange-ment	Auxil. piping	Addit. measures	Seal type	Materials to EN 12756 1 Seal face	2 Seal face	3 Sec. seal	4 Spring	5 Others	Hazard warnings	TLV-value	Normal condition	Melting temperature °C	Boiling point °C	Density g/cm³
1		2	3	4	5	6	7	8						10	11	12	13	14	15
Ethylene dichloride --> *Dichloroethenes*																			
Ethylene glycols:																			
Diethylene glycol	$C_4H_{10}O_3$		–	<100	S	11		1	Q_1(S)	B	E	G	G	Xn		fl	–6	245	1,12
Ethylene glycol (1,2-Ethanediol, 'Glycol')	$C_2H_6O_2$		–	<100	S,Q	62		1	Q_1(S)	B	E	G	G	Xn	10	fl	–16	198	1,113
Tetraethylene glycol	$C_8H_{18}O_5$		–	<100	S	11		1	Q_1(S)	B	E	G	G			fl	–6	328	1,128
Triethylene glycol	$C_6H_{14}O_4$		–	<100	S	11		1	Q_1(S)	B	E	G	G			fl	–4	291	1,1274
Ethylene oxide	C_2H_4O	TA	–	<60	D	53A		1	Q_1(S)	B	M_2	G	G	T,Xi,R45,R46,F+,6	*	ga	–111	10	(–)
Ethyl ether --> *Diethyl ether*																			
Ethyl formiate --> *Formic acid ethyl esters*																			
2-Ethylhexanol (Isooctanol)	$C_8H_{18}O$		–	<100	S	11		1	Q_1(S)	B	V	G	G	Xi		fl	<–76	182	0,834
F																			
Faeces (feces)		N	–	<60	S	11		1	Q_1	Q_1	V	G	G			fl			
Fats and fatty oils		N	–	<200	S	11		1	Q_1(S)	B	M_1	G	G			fl			
Fatty acids		G	–	>F,<Kp	S	11		1	Q_1(V)	B	M_1	G	G			fl			
Fatty alcohol sulfates		G	<L	<Kp,>K	S	11		1	Q_1(V)	B	V	G	G			fe			
Fatty alcohols		G	–	<100	S	11		1	Q_1(S)	B	V	G	G			fl			
Ferric phosphate solution in mineral acids			L	<100	D	53A	SW	1	Q_1(V)	B	M_1	G	G	2,U		kr			2,87
Ferricyanides		G	<L	<Kp,>K	S	11		1	Q_1(V)	B	E	G	G			kr			
Finishing agents, dressing agents		S	–	<Kp	S	11		1	Q_1(S)	B	V	G	G	U		fl			
Fir needle oils		G	–	<60	S	11		1	Q_1(S)	B	V	G	G			fl			0,87...0,88
Fish glue		N	–	<60	S,Q	11		1	Q_1(S)	B	V	G	G	3		fl			
Fish liver oils		N	–	<100	S	11		1	Q_1(S)	B	V	G	G			fl			
Fish meal		N	Sus	<60	S	02		1	Q_1	Q_1	V	G	G			fe			
Fish offals		N	Sus	<60	S	02		1	Q_1	Q_1	V	G	G			fe			
Fish oils		N	–	<100	S	11		1	Q_1(S)	B	V	G	G			fl			
Fish slurry		N	Sus	<60	S	02		1	Q_1	Q_1	V	G	G			fe			
Fixative		G	<L	<60	S,Q	11		1	Q_1(S)	B	M_1	G	G	3		fe			
Fixing bath, acidic			–	<60	S	11		1	Q_1(S)	B	V	G	G			fl			
Flue gas desulphurization plants (FGD): all acid suspensions		V	<25	<80	S	02	kD	3	Q_1	Q_1	V	M	M			fl			
Fluoroacetic acid	$C_2H_3FO_2$	TA	<L	<Kp	D	53A		1	Q_1(V)	B	M_1	G	G	T+,2,N		kr	35	165	1,369
Fluoroboric acid	HBF_4		–	<60	D	54		1	Q_1	Q_1	M_1	G	G	C,2		fl	–78	130(Z)	1,4
Fluorosilicic acid	$H_2(SiF_6)$		–	<60	D	54		1	Q_1	B	M_1	G	G	C,2		fl		(Z)	1,3
	$H_2(SiF_6)$		<30	<25	S	11		5	Q_1	Q_1	V	M	M						
Formaldehyde (Methanal)	HCHO	TA	–	<100	D	53A		1	Q_1(V)	B	M_2	G	G	T,C,R40,R43,1,3	0,5	ga	–117	–19	(+)
Formalin	HCHO	TA,®	~40	<Kp	S,Q	62		1	Q_1(V)	B	M_2	G	G	T,C,R40,R43,1,3		fl			1,122 (40%)
Formamide	CH_3NO	TA	–	<60	S	11		1	Q_1(S)	B	E	G	G	T,R61		fl	3	210	1,13
Formic acid	HCOOH	TA	100	TG	D	53A	SW	1	Q_1(V)	B	M_2	G	G	C,2	5	fl	8(100%)	101(100%)	1,22 (100%)
	HCOOH	TA	–	<80	S	11	SS	1	Q_1(V)	B	M_2	M	M	C					
	HCOOH	TA	<30	<60	S	11	SS	1	Q_1(V)	B	M_2	G	G	C					
	HCOOH	TA	>30	<30	S	11	SS	1	Q_1(V)	B	M_2	G	G	C					
	HCOOH	TA	>80	<40	S	11	SS	1	Q_1(V)	B	M_2	G	G	C					
	HCOOH	TA	>90	<50	S	11	SS	1	Q_1(V)	B	M_2	G	G	C					
Formic acid ethyl ester (Ethyl formiate)	$C_5H_{10}O_2$	TA	–	<Kp	S,Q	62		1	Q_1(S)	B	M_2	G	G	Xn,F	100	fl	–80	54	0,917
Formic acid methyl ester (Methyl formiate)	$C_2H_4O_2$	TA	–	<Kp	S,Q	62		1	Q_1(S)	B	M_2	G	G	Xn,F+	100	fl	–100	32	0,97
Formylmorpholine, n-(4-Morpholine-carboxaldehyde, NFM)	$C_5H_9NO_2$		–	<80	S	11		1	Q_1(S)	B	M_1	G	G			fl	23	240	1,15
Freon --> *Refrigerants*		®																	
Fresh sludge (sewage works)			–	<60	S	02	kD	2	Q_{12}	Q_{12}	V	G	G			fl			
Frigen --> *Refrigerants*		®																	
Fruit juices		N	–	<60	S	11		1	Q_1(S)	B	V	G	G			fl			
Fruit mash --> *Mashes*																			
Fruit pulp --> *Mashes*																			
Fuel oils:																			
Fuel oil (bottoms)		TA	–	<120	S	11		1	Q_1	Q_1	V	G	G	Xn,R40,N		fl			
Fuel oil EL		TA	–	<120	S	11		1	Q_1(S)	B	V	G	G	Xn,R40,N		fl	Pp< –6	155...390	<0,86(15)
Fuel oil L		TA	–	<120	S	11		1	Q_1(S)	B	V	G	G	Xn,R40,N		fl			<1,10(15)
Fuel oil M		TA	–	<120	S	11		1	Q_1(S)	B	V	G	G	Xn,R40,N		fl			<1,20(15)
Fuel oil S		TA	–	<120	S	11		1	Q_1(S)	B	V	G	G	Xn,R40,N			–10... +40		

Mechanical seal selection by media

Media					Mechanical seal									Additional information on the medium					
Code of materials and legend see inside of back cover. Please observe the note on page 1.	Chemical formula	Remark	Concentration %	Temp. °C	Arrange-ment	Auxil. piping	Addit. measures	Seal type	Materials to EN 12756 1 Seal face	2 Seal face	3 Sec. seal	4 Spring	5 Others	Hazard warnings	TLV-value	Normal condition	Melting temperature °C	Boiling point °C	Density g/cm³
1		2	3	4	5	6	7	8						10	11	12	13	14	15
Fumaric acid	$C_4H_4O_4$		<L	<100	S	11		1	Q_1(V)	B	V	G	G	Xi		kr		290(S)	1,625
Furfurol (Furfural, Furaldehyde)	$C_5H_4O_2$	TA	–	<100	D	53A		1	Q_1(S)	B	M_2	G	G	T,Xn,Xi,R40	5	fl	–36	162	1,159
Furfuryl alcohol	$C_5H_6O_2$		–	<100	S,Q	62		1	Q_1(S)	B	M_2	G	G	Xn	10	fl	–31	170	1,13
G																			
Gallic acid	$C_7H_6O_5$		<L	<100	S	11		1	Q_1(S)	B	V	G	G	Xi		kr	253(Z)		1,69
Galvanic baths			–	<60	S	11		1	Q_1(V)	B	V	G	G			fl			
Gas --> *Petrol*																			
Gas oil			– –	<140 <220	S S,Q	11 62		1 1	Q_1(S) Q_1(S)	B A	V M_1	G G	G G	T,R45		fl fl			200...360
Gas scrubber water			–	<60	S	11		1	Q_1(S)	B	V	G	G			fl			
Gasoline --> *Petrol*																			
Gasoline-methanol mixture --> *Petrol-methanol mixture*																			
Gelatin			–	<100	S	11		1	Q_1(S)	B	V	G	G			fl			
Gilotherm --> *Heat transfer oils*		®																	
Gingerbread dough			–	<60	D	53A		1	Q_1(S)	B	V	G	G	4		pa			
Glacial acetic acid --> *Acetic acid*																			
Glauber's salt --> *Sodium sulphate*																			
Glazing slip			<50	<60	D	53A		5	Q_1	Q_1	V	G	G	4		pa			
Glucose D- (Dextrose, Grape sugar)	$C_6H_{12}O_6$		<L	<100	S	11		1	Q_1(S)	B	V	G	G			kr	146		1,56
Glue			–	<Kp	D	53A		1	Q_1(S)	B	V	G	G	3,4		fl			
Glutamic acid (2-Aminoglutaric acid)	$C_5H_9NO_4$		<L	<100	S	11		1	Q_1(V)	B	M_1	G	G			kr	205(Z)		
Glutaric acid (Pentene diacid)	$C_5H_8O_4$		<L	<Kp	S	11		1	Q_1(V)	B	M_1	G	G	Xi		kr	97	303	1,43
Glycerol (1,2,3-Propan-etriol, Glycerine)	$C_3H_8O_3$		–	<120	S	11		1	Q_1(S)	B	V	G	G			fl	19	290(Z)	1,261
Glycol --> *Ethylene glycol*																			
Glycol ethers		G	–	<100	S	11		1	Q_1(S)	B	E	G	G			fl			
Glycolic acid (Hydroxyacetic acid)	$HOCH_2COOH$	TA	<L	<60	S	11		1	Q_1(V)	B	E	G	G	C		kr	80	100(Z)	1,26
Glycols (diols), general		G	–	<100	S	11		1	Q_1(S)	B	E	G	G			fl			
Grape sugar --> *D-Glucose*																			
Gypsum sludge	$CaSO_4*2H_2O$		<50	<60	D	53A		5	Q_1	Q_1	V	G	G	4		pa			
Gypsum suspensions (from FGD, all of them)	$CaSO_4*2H_2O$		<25	<80	S	02	kD	3	Q_1	Q_1	V	M	G			fl			
H																			
Hair lotions		G	–	<40	S	11		1	Q_1(S)	B	V	G	G			fl			
Hair oils		G	–	<40	S	11		1	Q_1(S)	B	V	G	G			fl			
Hair shampoos		G	–	<60	D	53A		1	Q_1(V)	B	V	G	G			fl			
Halocarbon		®	–	<200	S	11		1	Q_1(S)	B	M_1	G	G			fl			
Heat transfer oils:		G																	
Vapour pressure at operating temperature <1 bar			– –	<100 <220	S S,Q	11 62		1 1	Q_1(S) Q_1(S)	B A	V M_1	G G	G G	3		fl fl			
Vapour pressure at operating temperature < 2 bar			–	<400	S,Q	62		6	A	Q_1	G	M_6	T_4	3		fl			
Vapour pressure at operating temperature > 2 bar			–	<400	D	53A		6	A	Q_1	G	M_6	T_4	3		fl			
Helium	He		–	<80	D	53A		1	Q_1(S)	B	M_1	G	G	1		ga	–272	–268	(–)
Heptane	C_7H_{16}	TA	–	<Kp	S	11		1	Q_1(S)	B	V	G	G	Xn,Xi,3,4,T,N	500	fl	–90	98	0,681
Hexachlorobenzene (HCB, Perchlorobenzene)	C_6Cl_6	TA	Sch	<Kp	D	53A		6	Q_{22}	Q_1	G	M_5	M	T,R45,N		kr	231	323...326	2,044
Hexachlorobutadiene (Perchlorobutadiene)	C_4Cl_6	TA	–	<80	D	53A		1	Q_1(V)	B	V	G	G	T,R40		fl	–20	215	1,68
Hexachloroethane (Perchloroethane)	C_2Cl_6	TA	<L	<80	D	53A		1	Q_1(S)	B	V	G	G	Xn,R40	1	kr		187(S)	2,09
Hexane, -n	C_6H_{14}	TA	–	<Kp	D	11		1	Q_1(S)	B	V	G	G	Xn,Xi,R62,F,N	50	fl	–95	68	0,66
Hexan-2-one	$C_6H_{12}O$	TA	–	Kp	S,Q	62		1	Q_1(S)	B	M_1	G	G	T,R62	5	fl	–57	127	0,83
Honey		N	–	<100	D	53A		1	Q_1(S)	B	V	G	G	3,4		pa			

Media					Mechanical seal									Additional information on the medium					
Code of materials and legend see inside of back cover. Please observe the note on page 1.	Chemical formula	Remark	Concentration %	Temp. °C	Arrange-ment	Auxil. piping	Addit. measures	Seal type	Materials to EN 12756 1 Seal face	2 Seal face	3 Sec. seal	4 Spring	5 Others	Hazard warnings	TLV-value	Normal condition	Melting temperature °C	Boiling point °C	Density g/cm³
1		2	3	4	5	6	7	8						10	11	12	13	14	15
Hop mash --> *Mashes*																			
Hot water --> *Water*																			
Hydrated lime (Suspension of calcium hydroxide)	$Ca(OH)_2$		<10	<80	S	11	kD	5	Q_1	Q_1	V	G	G	Xi		kr			2,23
Hydraulic fluids HFA, HFB, HFC, HFD			–	<70	S	11		1	Q_1(S)	B	V	G	G	U		fl			
Hydraulic oils H, HL, HLP			–	<80	S	11		1	Q_1(S)	B	V	G	G	U		fl			
Hydrazine	N_2H_4		–	<Kp	D	53A		1	Q_1(S)	B	E	G	G	T,C,R45,N	*	fl	2	113	1,011
Hydroiodic acid	HI		–	<Kp	D	53A		1	Q_1	Q_1	M_1	G	G	C,2		fl		127(A)	1,7 (A57%)
Hydrobromic acid solution	HBr		–	<Kp	D	53A	SW	1	Q_1	Q_1	M_1	G	G	C,Xi,2,6		fl		126	1,5
Hydrochloric acid	HCl HCl HCl HCl HCl HCl HCl		0,04 <2 <10 <35 –	<20 <65 <25 <20 <80	S,Q S,Q S,Q S,Q D	62 62 62 62 53A		1 1 1 1 1	Q_1(V) Q_1(V) Q_1(V) Q_1(V) Q_1(V)	B B B B B	V V V V V	G M M M M	G M M M M	Xi,2 Xi,2 Xi,2 C,2 C,2	#7 #7 #7 #7 #7	fl fl fl fl fl		5%~101 10%~103 20%~110 25%~107 30%~95 35%~80 40%~20	10,5% 1,05 20,4% 1,10 24,3% 1,12 28,2% 1,14 32,1% 1,16 36,2% 1,18 40,4% 1,20
Hydrocyanic acid	HCN	TA	–	<Kp	D	53A		1	Q_1(V)	B	E	G	G	T+,F+,N	10	fl	–14	26	0,687
Hydrofluoric acid	HF HF HF HF		<40 <20 – –	<20 <30 <10 <Kp	S,Q S,Q S,Q D	62 62 62 54		1 1 1 1	Q_1 Q_1 Q_1 Q_1	B B B Q_1	M_1 M_1 M_1 M_1	M M M G	M M M G	T+,C T+,C T+,C T+,C,2	3 3 3 3	fl fl fl fl		112(A) 20%103 60%80 100%20	1,13 A38
Hydrofluosilicic acid --> *Fluorosilicic acid*																			
Hydrogen	H_2		–	<60	D	53A		1	Q_1(S)	B	E	G	G	F+,1		ga	–259	–252	(–)
Hydrogen chloride anhydrous	HCl		–	<60	D	54		1	Q_1(V)	B	M_1	G	G	T,C,1,2,3	5	ga	–114	–85	(+)
Hydrogen fluoride (gas)	HF		–	<60	D	54		1	Q_1	B	M_2	G	G	T+,C,1,2	3	ga	–83	19	(+)
Hydrogen iodide anhydrous	HI		–	>–20	D	53A		1	Q_1	Q_1	M_1	G	G	C,1		ga	–51	–35	(+)
Hydrogen peroxide	H_2O_2 H_2O_2		<90 <60	<Kp <60	D S	53A 11		1 1	Q_1 Q_1	Q_1 Q_1	M_1 V	G G	G G	Xn,C,O,1	1	fl	0	150	1,4467
Hydrogen phosphide (Phosphine)	PH_3		–	<60	D	53A		1	Q_1(V)	B	M_1	G	G	T+,1,F+,N	0,1	ga	–133	–87	(+)
Hydrogen sulfide	H_2S		–	<100	D	62		1	Q_1(V)	B	M_2	G	G	T+,1,F+,N	10	ga	–85	–60	(+)
Hydroxymethyl propionitril --> *Acetone cyanohydrin*																			
Hypochlorous acid	HOCl		–	<40	D	53A		1	Q_1(V)	B	V	G	G			fl			
I																			
Ice cream		N	–		S	01		1	Q_1(S)	B	V	G	G			pa			
Insecticides (Aqueous solution)		S	<L	<Kp	S,Q	62	QW	1	Q_1(S)	B	V	G	G	6,U					
Insulating lacquers		S	Sch	<200	D	53A		1	Q_1(S)	A	M_1	G	G	3,4		fe			
Iodine	I_2		Sch	<Kp	D	53A		1	Q_1	Q_1	M_1	G	G	Xn,4,6,N	0,1	fe	114	184	4,93
Iodoform (Triiodomethane)	CHI_3		Sch	<200	D	53A		1	Q_1	Q_1	M_1	G	G	Xn,4,6		fe	119	~218	4,008
Iron chlorides ($FeCl_2$ or $FeCl_3$)			<15 <L	<25 <Kp	S D	11 11		1 1	Q_1 Q_1(V)	Q_1 B	E E	M G	M G	Xn Xn		kr kr			
Iron sulfates:																			
Iron (II) sulfate (Ferrous sulfate, Iron vitriol)	$FeSO_4$		<L	<80	S	11		5	Q_1	Q_1	V	G	G	Xn		kr	>400(Z)		
Iron (III) sulfate (Ferric sulfate)	$Fe_2(SO_4)_3$		<L	<80	S	11		5	Q_1	Q_1	V	G	G	Xn		kr	480(Z)		3,1
Iso ... also see --> ...																			
Isoborneol (2-Exo-bornanol)	$C_{10}H_{18}O$		<L	<Kp	S	11		1	Q_1(S)	B	M_1	G	G	Xi		fe	212(Z)		
Isobutyl acetate --> *Acetic acid esters*																			
Isocyanates		S	Sch	<200	D	53A		1	Q_1(V)	B	M_1	G	G	U					
Isooctane (2,2,4-Trimethylpentane)	C_8H_{18}	TA	–	<40	S	11		1	Q_1(S)	B	V	G	G	Xn,Xi,F,N		fl	–110	117	0,692
Isooctanol (2-Ethyl-1-hexanol) --> *2-Ethyl hexanol)*																			
Isopentane --> *Pentanes*																			
Isophorone (3,5,5-Trimethylcyclohex-2-enone)	$C_9H_{14}O$	TA	–	<40	S,Q	62		1	Q_1(S)	B	E	G	G	Xn,Xi,R40	5	fl	–8	215	0,92
Isopropanol --> *2-Propanol*																			
Isopropyl ... --> *Propyl ...*																			

Mechanical seal selection by media

Media					Mechanical seal									Additional information on the medium					
Code of materials and legend see inside of back cover. Please observe the note on page 1.	Chemical formula	Remark	Concentration %	Temp. °C	Arrange-ment	Auxil. piping	Addit. measures	Seal type	Materials to EN 12756 1 Seal face	2 Seal face	3 Sec. seal	4 Spring	5 Others	Hazard warnings	TLV-value	Normal condition	Melting temperature °C	Boiling point °C	Density g/cm³
1		2	3	4	5	6	7	8						10	11	12	13	14	15
Isopropyl alcohol --> *2-Propanol*																			
Isopropyl methylbenzene --> *Cymene*																			
Isopropylbenzene --> *Cumene*																			
J																			
Jams, marmalades			–	<100	S	11		1	$Q_1(V)$	B	V	G	G			pa			
Jet fuel IP4, IP5		G	–	<40	S	11		1	$Q_1(S)$	B	V	G	G	F		fl		100...280	0,75...0,84
K																			
Kaurit --> *Glues*																			
Kerosene			–	<100	S	11		1	$Q_1(S)$	B	V	G	G	Xn		fl		175...325	~0,8
Ketchup		N	–	<80	S,Q	62		1	$Q_1(V)$	B	E	G	G	3		fl			
Krypton	Kr		–	<160	D	53A		1	$Q_1(S)$	B	M_1	G	G	1		ga	–157	–154	(+)
L																			
Lacquer solvents		S	–	<Kp	S	11		1	$Q_1(S)$	B	M_1	G	G	U		fl			
Lacquers		S	–	<Kp	D	53A		1	$Q_1(V)$	B	M_1	G	G	3,4		fl			
Lactic acid	$C_3H_6O_3$		<L	<80	S	11		1	$Q_1(S)$	B	V	G	G	Xi		kr	53		1,206
Lactose (milk sugar)	$C_{12}H_{22}O_{11}$ $C_{12}H_{22}O_{11}$		<L <20	<Kp <Kp	S S	11 11		1 5	$Q_1(V)$ Q_1	B Q_1	V V	G G	G G			kr	223		1,525
Lard		N	Sch	<100	S	11		1	$Q_1(S)$	B	V	G	G			pa	36...42		
Latex (specification necessary)		N	–	<100	S,Q	53A		X	U_2	$Q_1(V)$	M	G	G	3,4		fl			
Lavender oil		TA,N	–	<Kp	S	11		1	$Q_1(S)$	B	V	G	G	Xi,T		fl		204	0,88...0,90
Lead (II) acetate (lead sugar)	$(CH_3COO)_2Pb$	TA	<L	<100	S	11		1	$Q_1(S)$	B	E	G	G	T,Xn,R62,N		kr	75	~200(Z)	2,5
Lead sugar --> *Lead (II) acetate*																			
Lecithine		N	–	<100	S	11		1	$Q_1(S)$	B	M_1	G	G			pa	~200(Z)		
Lemonade syrup			–	<60	S	11		1	$Q_1(V)$	B	V	G	G			fl			
Lemonades			–	<60	S	11		1	$Q_1(S)$	B	V	G	G			fl			
Lignosulfonic acid			<L	<100	D	11		1	$Q_1(V)$	B	M_1	G	G	4		fe			
Lignite tar		N, TA	– –	<140 <200	S S	11 11	(H) (H)	1 1	$Q_1(S)$ $Q_1(S)$	B A	V M_1	G G	G G	T,R45		pa		250 ... 350	0,85 ... 1,0
Lime water ($Ca(OH)_2+H_2O$)	$Ca(OH)_2$ $Ca(OH)_2$		<10 <50	<80 <80	S,Q S	62 02	QW kD	2 3	Q_{12} Q_1	Q_{12} Q_1	V V	G G	G G	Xi,6 Xi,6					
Lime powder suspension (Calcium carbonate)	$CaCO_3$ $CaCO_3$ $CaCO_3$		<10 <10 <50	<80 <80 <80	S S,Q S	11 62 02	kD QW kD	5 2 3	Q_4 Q_{12} Q_1	Q_4 Q_{12} Q_1	V V V	G G G	G G G	6		kr	825(Z)		2,95
Linseed oil		N	–	<60	S	11		1	$Q_1(S)$	B	V	G	G			fl			0,92...0,94
Linters		N	Sus	<Kp	D	53A		1	$Q_1(V)$	B	V	G	G			fe			
Liquefied gases acc. to DIN 51622		G	–	<Kp	S	11		1	Q_{12}	A	V	G	G	F		ga			
Liqueurs, liqueur wines			–	<60	S	11		1	$Q_1(S)$	B	V	G	G			fl			
Liquid ... --> ... *,liquid*																			
Liquor --> *Ethanol*																			
Liquorice		N	–	<Kp	D	53A		1	$Q_1(S)$	B	V	G	G	4		pa			
Lithium bromide	LiBr		<L	<40	S	11		1	Q_1	B	V	G	G	Xn		kr	547	1265	3,465
Lithium chloride	LiCl LiCl		<L <L	<20 <Kp	S D	11 53A		1 1	$Q_1(V)$ $Q_1(V)$	B B	V M_1	G G	G G	Xn Xn,2		kr	613	1360	2,068
Liver sausage mass			–	<60	S	11		1	$Q_1(S)$	B	V	G	G			pa			
Lubrication oils		S	–	>F<140	S	11		1	$Q_1(S)$	B	V	G	G	U		fl			
Lysoform = 7,7-% --> *Formaldehyde*																			
Lysol		®	–	<60	S	11		1	$Q_1(V)$	B	V	G	G			fl			
M																			
m- ..., meta- ... --> ...																			
Magnesium bisulfite --> *Magnesium hydrogen sulfite*																			
Magnesium chloride	$MgCl_2$ $MgCl_2$		<30 <L	<20 <80	S S	11 11		1 1	$Q_1(V)$ $Q_1(V)$	B B	V V	G M	G M			kr	708	1412	2,31...2,33
Magnesium hydrogen sulfite			<L	<Kp	D	53A		1	$Q_1(V)$	B	M_1	G	G			kr			

Media					Mechanical seal									Additional information on the medium					
Code of materials and legend see inside of back cover. Please observe the note on page 1.	Chemical formula	Remark	Concentration %	Temp. °C	Arrange-ment	Auxil. piping	Addit. measures	Seal type	Materials to EN 12756 1 Seal face	2 Seal face	3 Sec. seal	4 Spring	5 Others	Hazard warnings	TLV-value	Normal condition	Melting temperature °C	Boiling point °C	Density g/cm³
1		2	3	4	5	6	7	8						10	11	12	13	14	15
Magnesium hydroxide	$Mg(OH)_2$ $Mg(OH)_2$ $Mg(OH)_2$		<10 <20 <40	<25 <40 <80	S S D	11 11 53A		1 1 1	U_1 Q_1 Q_1	U_1 Q_1 Q_1	E E E	G G G	G G G			kr			2,36
Magnesium nitrate	$Mg(NO_3)_2{}^*{}_6H_2O$		<L	<25	S	11		1	$Q_1(V)$	B	M_1	G	G	O		fe	89		1,64
Magnesium sulfate	$MgSO_4$		<L	<Kp	S	11		1	$Q_1(V)$	B	V	G	G			kr	1124		2,66
Maleic acid	$C_4H_4O_4$		<L	<100	S	11		1	$Q_1(V)$	B	V	G	G	Xn,Xi		kr	140	160(Z)	1,590
Malic acid (Hydroxysuccinic acid)	$C_4H_6O_5$		<L	<60>K	S	11		1	$Q_1(S)$	B	E	G	G	Xi		kr	132		1,6
Malonic acid	$C_3H_4O_4$		<L	<60	S	53A		1	$Q_1(V)$	B	M_2	G	G	Xn		kr	135		1,62
Manganese(II)-chloride	$MnCl^*{}_4H_2O$		<L	<Kp	D	53A		1	$Q_1(V)$	B	M_1	G	G	Xn,2		kr	58		2,01
Manganese(II)-nitrate	$Mn(NO_3)_2{}^*{}_6H_2O$		<L	<Kp	S	11		1	$Q_1(V)$	B	E	G	G	O		kr	37	129	2,13
Manganese sulfates: Manganese(II)-sulfate Manganese(III)-sulfate Manganese(IV)-sulfate	 $MnSO_4$ $Mn_2(SO_4)_3$ $Mn(SO_4)_2$		 <L <L <L	 <60 <60 <60	 S S S	 11 11 11		 1 1 1	 $Q_1(V)$ $Q_1(V)$ $Q_1(V)$	 B B B	 M_1 M_1 M_1	 G G G	 G G G	 Xn,N U U		 fe kr kr	 700 160(Z)	 850(Z)	 3,25
Manure, liquid		N	–	<60	S	11		1	Q_1	Q_1	P	G	G			fl			
Marlotherm --> *Heat transfer oils*		®																	
Mashes: Fruit mash Fruit pulp Hop mash Mustard mash Potato mash Salt mash			 Sus Sus Sus Sus Sus <L	 <Kp <Kp <Kp <Kp <Kp <Kp	 S S S S S S,Q	 11 11 11 11 11 62		 1 1 1 1 1 4	 $Q_1(S)$ $Q_1(S)$ $Q_1(S)$ $Q_1(V)$ $Q_1(S)$ Q_1	 B B B B B Q_1	 V V V V V V	 G G G G G M	 G G G G G M			 fl fl fl fl fl fl				
Masut			– –	<100 <200	S S	11 11		1 1	$Q_1(S)$ $Q_1(S)$	B A	V M_1	G G	G G	U U		fl fl			
Mayonnaise			–	<40	S	11		1	$Q_1(V)$	B	V	G	G			pa			
MDEA --> *N-Methyl-2,2'-iminodiethanol*																			
MEA --> *N-Methyl ethanolamine*																			
Meat juice, meat broth		N	–	<60	S	11		1	$Q_1(S)$	B	V	G	G			fl			
MEK --> *Butanone*																			
Melamine resins		S	–	<100	D	53A		1	$Q_1(V)$	B	M_1	G	G	U,3,4		fl			
Mercaptanes --> *Thiols*																			
Mercuric chlorides: Mercuric chloride Mercurous chloride (Calomel)	 $HgCl_2$ Hg_2Cl_2		 <L <L	 <Kp <100	 D D	 53A 53A		 1 1	 $Q_1(V)$ $Q_1(V)$	 B B	 V V	 G G	 G G	 T+,C,2,N Xn,Xi,2,N		 kr kr	 280 	 302 385(S)	 5,44 7,15
Mercury	Hg		–	<60	D	53A		1	$Q_1(S)$	B	V	G	G	T,4,6,N	0,01	fl	–38	356	13,5939
Mercury (I) nitrate	$Hg_2(NO_3)_2$		<L	<Kp	S,Q	62		1	$Q_1(V)$	B	V	G	G	T+,N		kr		70(Z)	
Mesityl oxide	$C_6H_{10}O$		–	<Kp	D	53A		1	$Q_1(S)$	B	M_1	G	G	Xn,3	25	fl	–59	130	0,854
Metal working lubricants: for finishing machines for other machine tools			 – –	 <80 <80	 D D	 53A 11		 5 5	 Q_1 Q_1	 Q_1 Q_1	 V V	 G G	 G G	 U U		 fl fl			
Methacrylic acid methylester (Methyl methacrylate)	$C_5H_8O_2$	TA	–	<Kp	D	53A		1	$Q_1(V)$	B	M_2	G	G	Xi,F	50	fl	–48	100	0,944
Methanal --> *Formaldehyde*																			
Methane	CH_4		–	<60	D	53A		1	U_2	A	V	G	G	F+,1		ga	–182	–161	(–)
Methanol (Methyl alcohol)	CH_3OH	TA	–	<60	S,Q	62		1	$Q_1(S)$	B	E	G	G	F,T	200	fl	–98	64	0,787
Methyl acetate --> *Acetic acid methyl ester*																			
Methyl acrylate (Acrylic acid methyl ester)	$C_4H_6O_2$	TA	–	<Kp	D	53A		1	$Q_1(V)$	B	M_2	G	G	Xn,Xi,F	5	fl	–75	80	0,954
Methyl alcohol --> *Methanol*																			
Methyl bromide (Bromomethane)	CH_3Br	TA	–	<60	D	53A		1	$Q_1(V)$	B	M_1	G	G	T,Xn,Xi,1,2,N	5	ga	–94	4	(+)
3-Methylbutan-2-one (Methyl isopropyl ketone)	$C_5H_{10}O$	TA	–	<Kp	S,Q	62		1	$Q_1(V)$	B	M_2	G	G	F		fl	–92	95	0,80
Methyl butyrate --> *Butyric acid esters*																			
Methyl cellosolve --> *Ethylene glycol*																			
Methyl chloride	CH_3Cl	TA	–	<80	D	53A		1	$Q_1(V)$	B	M_1	G	G	Xn,R40,F+	50	ga	–97	–25	(+)
Methyl chloroform --> *1,1,1-Trichloroethane*																			
Methyl cyclohexanone, mixture of isomers	$C_7H_{12}O$		–	<Kp	S,Q	62		1	$Q_1(S)$	B	M_2	G	G	Xn	50	fl	–73...–14	165...170	0,92...0,93

Mechanical seal selection by media

Media					Mechanical seal									Additional information on the medium					
Code of materials and legend see inside of back cover. Please observe the note on page 1.	Chemical formula	Remark	Concentration %	Temp. °C	Arrange-ment	Auxil. piping	Addit. measures	Seal type	Materials to EN 12756 1 Seal face	2 Seal face	3 Sec. seal	4 Spring	5 Others	Hazard warnings	TLV-value	Normal condition	Melting temperature °C	Boiling point °C	Density g/cm³
1		2	3	4	5	6	7	8						10	11	12	13	14	15
Methylene chloride	CH_2Cl_2	TA	–	<80	D	53A		1	Q_1(V)	B	M_1	G	G	Xn,R40,1,3,4	100	fl	–96	40	1,325
Methyl ethanolamine, N-	C_3H_9NO		–	Kp	S,Q	62		1	Q_1	B	M_2	G	G	Xn,C		fl	–3	158	0,937
Methyl ethyl ketone --> *Butanone*																			
Methyl formiate --> *Formic acid methyl ester*																			
Methyl-2,2'-imino-diethanol, N (N-methyldiethanolamine)	$C_5H_{13}NO_2$		–	<180	S,Q	62		1	Q_1	B	M_2	G	G	Xi		fl	–21	243	1,04
Methyl isobutyl ketone (MIBK) --> *4-Methylpentan-2-one*																			
Methyl isopropyl ketone --> *3-Methylbutan-2-one*																			
Methyl methacrylate (MMA) --> *Methacrylic acid methyl ester*																			
Methylnaphthalenes:																			
1-Methylnaphthalene	$C_{11}H_{10}$	TA	–	<160	S	11		1	Q_1(S)	B	M_1	G	G	Xn,N		fl	–30	245	1,020
2-Methylnaphthalene	$C_{11}H_{10}$	TA	Sch	<160	S	11	(H)	1	Q_1(S)	B	M_1	G	G	Xn,N		kr	35	241	1,005
4-Methylpentan-2-one	$C_6H_{12}O$	TA	–	<100	S	11		1	Q_1	B	M_2	G	G	Xn,Xi,F	100	fl	–80	117	0,80
Methyl pyrrolidone, N- (1-Methyl-2-pyrrolidinone, NMP)	C_5H_9NO		–	<100	S	11		1	Q_1	B	M_2	G	G	Xi	20	fl	–24	206	1,028
Milk		N	–	<40	S	11		1	Q_1(S)	B	V	G	G			fl			
Milk sugar --> *Lactose*																			
Mineral oils		S	–	<80	S	11		1	Q_1(S)	B	V	G	G			fl			
Miscella			–	<60	S	11		1	Q_1(S)	B	V	G	G			fl			
Mobiltherm --> *Heat transfer oils*		®																	
Molasse			–	<100	S,Q	62		1	Q_{12}	Q_{12}	V	G	G	3,4		fl			
Mono ... --> ...																			
Monoethanolamine --> *2-Aminoethanol*																			
Mud			Sus	<40	S,Q	62	kD	3	Q_2	Q_2	V	M	G			fl			
Mustard			–	<60	S,Q	62		1	Q_1	Q_1	V	G	G			pa			
Mustard mash --> *Mashes*																			
N																			
Naphtha		TA,G	–	<Kp	S	11		1	Q_1(S)	B	M_1	G	G	T,R45,F,N		fl		30 ... >200	
Naphthalene	$C_{10}H_8$	TA	Sch	<Kp	S,Q	62	(H)	1	Q_1(S)	B	M_1	G	G	Xn,R40,N	10	kr	81	218	1,14
Naphthenic acids		G	–	<60	S	11		1	Q_1(V)	B	V	G	G	Xi		fl	~30	132...243	0,94...1,03
Naphthol dyes		G	<L	<140	S	11		1	Q_1(V)	B	V	G	G	U		kr			
Naphthylamines:																			
1-Naphthylamine	$C_{10}H_9N$	TA	Sch	<150	S	11	(H)	1	Q_1(V)	B	M_2	G	G	Xn,N		kr	50	301	1,13
2-Naphthylamine	$C_{10}H_9N$	TA	<L	<Kp	D	53A		1	Q_1(V)	B	M_2	G	G	T,Xn,R45,N	*	kr	110	306	1,216
Natural gas			–	<60	D	53A		1	Q_1(S)	A	V	G	G	1,F		ga			
Neon	Ne		–	<80	D	53A		1	Q_1(S)	B	N	G	G	1		ga	–248	–247	(–)
Neopentane (2,2-Dimethylpropane) --> *Pentanes*																			
NFM --> *n-Formylmorpholine*																			
Nickel (II) chloride	NiCl		<L	<Kp	D	53A		1	Q_1(V)	B	M_1	G	G	T,R45,2,N		kr	1030		3,55
Nickel (II) sulfate	$NiSO_4$		<L	<Kp	D	53A		1	Q_1(V)	B	M_1	G	G	Xn,R40,N		kr	>840(Z)		3,68
Nitrating acid		G	–	<80	D	53A		1	Q_1(V)	B	M_1	G	G	C,2,O		fl			
Nitric acid	HNO_3		<40	<20	S,Q	62	QW	1	Q_1(V)	B	M_1	G	G	C	2	fl	10%–6	10% 102	10% 1,054
	HNO_3		<30	<90	S,Q	62	QW	1	Q_1	Q_1	M_1	G	G	C	2	fl	20%–18	20% 104	20% 1,115
	HNO_3		<50	<80	S,Q	62	QW	1	Q_1	Q_1	M_1	G	G	C	2	fl	30%–36	30% 107	30% 1,180
	HNO_3		<60	<70	S,Q	62	QW	1	Q_1	Q_1	M_1	G	G	C	2	fl	40%–28	40% 111	40% 1,246
	HNO_3		<70	<60	S,Q	62	QW	1	Q_1	Q_1	M_1	M	M	C	2	fl	50%–19	50% 115	50% 1,310
	HNO_3		<80	<50	S,Q	62	QW	1	Q_1	Q_1	M_1	M	M	C	2	fl	60%–21	60% 118	60% 1,367
	HNO_3		<90	<30	S,Q	62	QW	1	Q_1	Q_1	M_1	M	M	C	2	fl	70%–41	70% 120	70% 1,413
Nitric acid, fuming	HNO_3		>90	<120	D	53A	SW	1	Q_1	Q_1	M_1	M	M	C,O,2	2	fl	80%–38	80% 113	80% 1,452
	HNO_3																90%–65	90% 96	90% 1,483
	HNO_3																100%–41	100% 83	100% 1,513
Nitrobenzene	$C_6H_5NO_2$	TA	–	<80	D	53A		1	Q_1(V)	B	M_1	G	G	T,R40,R62,N	1	fl	5...6	211	1,19867
Nitrochloroform --> *Trichloronitromethane*																			
Nitrogen	N_2		–	<100	D	53A		1	Q_1(S)	B	E	G	G	1		ga	–210	–196	(–)
Nitroglycerine	$CH_5(NO_3)_3$	TA	–	<60	D	53A		1	Q_1(S)	B	E	G	G	T+,E,N	0,05	fl	14		1,59

Media					Mechanical seal									Additional information on the medium					
Code of materials and legend see inside of back cover. Please observe the note on page 1.	Chemical formula	Remark	Concentration %	Temp. °C	Arrange-ment	Auxil. piping	Addit. measures	Seal type	Materials to EN 12756 1 Seal face	2 Seal face	3 Sec. seal	4 Spring	5 Others	Hazard warnings	TLV-value	Normal condition	Melting temperature °C	Boiling point °C	Density g/cm³
1		2	3	4	5	6	7	8						10	11	12	13	14	15
Nitromethane	CH_3NO_2	TA	–	<Kp	D	53A		1	Q_1(V)	B	M_1	G	G	Xn		fl	–29	101	1,13
Nitrosylsulfuric acid	$NOHSO_4$		<L	<80	D	53A		1	Q_1(V)	B	M_1	G	G	C,O		kr	73(Z)		
NMP --> *N-Methyl pyrrolidone*																			
4-Nonylphenol	$C_{15}H_{24}O$	TA	Sch	<220	S,Q	01	(H)	6	A	Q_1(S)	M_7	T_6	G_1	C,N		pa	2	295...304	0,95
O																			
o-..., ortho... --> ...																			
Octane	C_8H_{18}	TA	–	<Kp	S	11		1	Q_1(S)	B	V	G	G	Xn,Xi,F,N	500	fl	–57	126	0,703
4-Octylphenol	$C_{14}H_{22}O$	TA	Sch	<220	S,Q	01	(H)	6	A	Q_1	U_1	M_6	G_1	C,N		fe	~80	277	0,95
Oil lacquer paints		G	–	<40	D	53A		1	Q_1(S)	B	M_1	G	G	U,3,4		fl			
Oils (not specified)		S	–	<100	S	11		1	Q_1(S)	B	V	G	G	U		fl			
Oleic acid			–	<Z	S,Q	62		1	Q_1(S)	B	M_1	G	G	3		fl	16	360	0,8935
Oleum --> *Sulfuric acid, fuming*																			
Olive oil		N	–	<100	S	11		1	Q_1(S)	B	V	G	G			fl	~6		0,91...0,92
Oxalic acid (Ethanedioic acid)	$C_2H_2O_4$	TA	<L	<Kp	S,Q	62		1	Q_1(V)	B	V	M	M	Xn		kr		>100(S)	1,901(25)
	$C_2H_2O_4$	TA	<L	<25	S,Q	62		1	Q_1(V)	B	E	G	M	Xn					
2-Oxazolidinone (2-Oxazolidone)	$C_3H_5NO_2$	TA	Sch	<200	D	53A	(H)	1	Q_1	Q_1	M_1	G	G	Xn,3,4,R40		kr	85...89	220(64)	
Ozone	O_3		–	<40	D	53A		1	Q_1	Q_1	K_{13}	G	G	T+,C,1,O	0,1	ga	–192	–112	(+)
P																			
p-..., para-... --> ...																			
Palatal		®,G	–	<60	S,Q	62		1	Q_1(S)	B	V	G	G	U,3		fl			
Palatinol® --> *Phthalic acid esters:* Palatinol A (DEP) Palatinol AH (DOP) Palatinol C (DBP) Palatinol M (DMP) Palatinol N (DINP) Palatinol O (DIBP) Palatinol Z (DIDP)																			
Palmitic acid	$C_{16}H_{32}O_2$		Sch	<200	S	01	(H)	6	B	Q_1	M_7	M_6	G_1			kr	63	351	0,8577(62)
Paradichlorobenzene --> *Dichlorobenzene*																			
Paraffin waxes		TA,G	Sch	<160	S	11	(H)	1	Q_1(S)	B	V	G	G	T,R45		pa			
Paraffins, paraffin oil		S	–	<160	S	11		1	Q_1(S)	B	V	G	G			fl			
Paraterphenyl --> *Terphenyls*																			
Paste (for gluing)		G		<Kp	D	53A		1	Q_1(S)	B	V	G	G	3,4		pa			
Peanut oil		N	–	<150	S	11		1	Q_1(S)	B	V	G	G			fl			
Pentanes:																			
Isopentane (2-Methylbutane)	C_5H_{12}	TA	–	<Kp	S	11		1	Q_1(S)	B	V	G	G	Xn,F+,N	1000	fl	–160	27	0,62
Neopentane (2,2-Dimethylpropane)	C_5H_{12}	TA	–	<Kp	S	11		1	Q_1(S)	B	V	G	G	F+,N	1000	ga	–16	9	
n-Pentane	C_5H_{12}	TA	–	<Kp	S	11		1	Q_1(S)	B	V	G	G	Xn,F+,N	1000	fl	–130	36	0,6262
3-Pentanol	$C_5H_{12}O$	G	–	<60	S,Q	62		1	Q_1(S)	B	E	G	G	Xn,Xi	$100	fl	<–50	116	0,82
Pentyl acetate --> *Acetic acid pentyl esters*																			
Perchlorobenzene --> *Hexachlorobenzene*																			
Perchloroethane --> *Hexachloroethane*																			
Perchloroethylene --> *Tetrachloroethylene*																			
Perhydrol --> *Hydrogen peroxide, 30% solution*																			
Petrol (Gasoline) unleaded, regular and supergrade		TA,G	–	<40	S	11		1	Q_1(S)	B	V	G	G	T,Xn,R45,F+,N		fl		40...200	0,72...0,76
Petrol ether --> *Petrol, Gasoline*																			
Petrolatum		G	Sch	<160	S	11		1	Q_1(S)	B	V	G	G			pa	38...60	>300	0,82...0,88
Petroleum		G	–	<160	S	11		1	Q_1(S)	B	V	G	G			fl	–20	150...280	
Petrol-methanol mixture		TA,G	–	<40	S	11		1	Q_1(S)	B	M_1	G	G	T,Xn,R45,F+,N		fl			

Mechanical seal selection by media

Media					Mechanical seal									Additional information on the medium					
Code of materials and legend see inside of back cover. Please observe the note on page 1.	Chemical formula	Remark	Concentration %	Temp. °C	Arrange-ment	Auxil. piping	Addit. measures	Seal type	Materials to EN 12756 1 Seal face	2 Seal face	3 Sec. seal	4 Spring	5 Others	Hazard warnings	TLV-value	Normal condition	Melting temperature °C	Boiling point °C	Density g/cm³
1		2	3	4	5	6	7	8						10	11	12	13	14	15
Phenol (Carbolic acid)	C_6H_5OH	TA	Sch	<Kp	D	53A		1	Q_1(V)	A	M_1	G	G	T,Xn,C	5	fe	41	182	1,06
Phenol-cresol mixtures		TA	Sch	<180	D	53A		1	Q_1(V)	A	M_1	G	G	T,C	5				
Phenol ether (phenyl ether)		TA, S	–	<100	D	53A		1	Q_1(S)	B	M_1	G	G	Xi,N		fl	27		1,07
Phenolic resins		S		<200	D	53A		1	Q_1(S)	A	M_1	G	G	3,U		fl			
Phenyl ethylene --> *Styrene*																			
Phenylacetic acid	$C_8H_8O_2$		<L	<Kp	S,Q	62		1	Q_1(V)	B	M_2	G	G	Xi,3		kr	76	266	1,08
Phenylenediamines (Diaminobenzenes):																			
m-Phenylenediamine	$C_6H_8N_2$	TA	<L	<Kp	S,Q	62		1	Q_1(S)	B	M_1	G	G	T,Xi,N	*	kr	63	287	1,11
o-Phenylenediamine	$C_6H_8N_2$	TA	<L	<Kp	S,Q	62		1	Q_1(S)	B	M_1	G	G	FXi,R40,N	*	kr	103	257(S)	1,14
p-Phenylenediamine	$C_6H_8N_2$	TA	<L	<Kp	D	53A		1	Q_1(S)	B	M_1	G	G	T,Xi,N	0,1 mg	kr	140	267	1,135
Phosgene (Carbonyl dichloride, Carbon oxychloride)	$COCl_2$	TA	–	<60	D	53A		1	Q_1(V)	B	M_1	G	G	T+,C	0,1	ga	−128	7	(+)
Phosphatizing baths:			<L	<60	D	53A		1	Q_1	Q_1	M_1	G	G			fl			
'Iron phosphatizing solution'			<L	<60	S	11		5	Q_1	Q_1	V	G	G			fl			
'Zinc phosphatizing solution'			<L	<60	D	53A		1	Q_1	Q_1	M_1	G	G			fl			
Phosphoric acids (conc. given in % P2O5; 1% P2O5 = 1.38 % H3PO4):																			
Pure acid			<65	<40	S,Q	62		1	Q_1(V)	B	V	G	G	C,6		fl			
			<65	<80	S,Q	62		1	Q_1(V)	B	V	M	M	C,6		fl			
Raw acid, produced			<55	<80	S	02	KD	3	Q_1	Q_1	V	M	G			fl			
thermally			<55	<120	D	54		1	Q_1(V)	B	M_1	G	G	C,2,6		fl			
Raw acid, produced wet			<65	<80	S	02		4	Q_1	Q_1	V	M	G			fl			
			<65	<160	D	53A		1	Q_1	Q_1	M_1	G	G	C,2,6		fl			
Superphosphoric acid			<85	<160	D	53A		1	Q_1	Q_1	M_1	G	G	C,2,6		fl			
Phosphorus pentachloride	PCl_5		<L	<60	D	53A	SW	1	Q_1(V)	B	M_1	G	G	T+,Xn,2,3	1 mg	kr	100(S)		2,114
Phthalic acid	$C_8H_6O_4$		<L	<Kp	S,Q	62		1	Q_1(V)	B	M_1	G	G	Xi		kr	191(Z)		1,59
Phthalic acid esters (phthalates):																			
Benzyl butyl phthalate (BBP)	$C_{19}H_{20}O_4$	TA	–	<100	S	11		1	Q_1(S)	B	M_1	G	G	T,R62,N		fl	<−35	370	1,12
–(2-ethyl hexyl)-phthalate (DEHP)	$C_{24}H_{38}O_4$	TA	–	<100	S,Q	62		1	Q_1(S)	B	M_1	G	G	V	10 mg	fl	−45	385	0,99
Diallyl phthalate	$C_{14}H_{14}O_4$	TA	–	<100	S	11		1	Q_1(S)	B	M_1	G	G	Xn,N		fl	−70	320	1,122
Dibutyl phthalate (DBP)	$C_{16}H_{22}O_4$	TA	–	<100	S	11		1	Q_1(S)	B	M_1	G	G	T,R62,N		fl	−35	34	1,047
Didecyl phthalate	$C_{28}H_{46}O_4$		–	<100	S	11		1	Q_1(S)	B	M_1	G	G			fl	3...5		
Diethyl phthalate (DEP)	$C_{12}H_{14}O_4$		–	<100	S	11		1	Q_1(S)	B	M_1	G	G			fl	−40	298	1,118
Diisobutyl phthalate (DIBP)	$C_{16}H_{22}O_4$	TA	–	<100	S	11		1	Q_1(S)	B	M_1	G	G	Xn,R62,N		fl	−64	305...315	1,049
Diisodecyl phthalate (DIDP)	$C_{28}H_{46}O_4$		–	<100	S	11		1	Q_1(S)	B	M_1	G	G			fl	−50	250...267(Z)	0,96...0,97
Diisononyl phthalate (DINP)	$C_{26}H_{42}O_4$		–	<100	S	11		1	Q_1(S)	B	M_1	G	G			fl		270(27)	~0,97
Diisooctyl phthalate (DIOP)	$C_{24}H_{38}O_4$	TA	–	<100	S,Q	62		1	Q_1(S)	B	M_1	G	G	Xn,R62,R63,6	10 mg	fl	−43	370	~0,985
Dimethyl glycol phthalate	$C_{14}H_{16}O_6$	TA	–	<100	S	11		1	Q_1(S)	B	M_1	G	G	T,R62		fl	−40	230	1,17
Dimethyl phthalate (DMP)	$C_{10}H_{10}O_4$		–	<100	S	11		1	Q_1(S)	B	M_1	G	G			fl	5,5	284	1,191
Dinonyl phthalate	$C_{26}H_{42}O_4$		–	<100	S	11		1	Q_1(S)	B	M_1	G	G			fl		413	0,978
Dioctyl phthalate (DOP)	$C_{24}H_{38}O_4$		–	<100	S	11		1	Q_1(S)	B	M_1	G	G	6		fl	−49	385	0,98
Dipentyl phthalate	$C_{18}H_{26}O_4$	TA	–	<100	S	11		1	Q_1(S)	B	M_1	G	G	T,R60,N		fl	−55	340...345	1,026
Diphenyl phthalate	$C_{20}H_{14}O_4$		–	<100	S	11		1	Q_1(S)	B	M_1	G	G			kr	70...73		1,28
Phthalic anhydride		TA	<L	<180	S,Q	62		1	Q_1(V)	B	M_1	G	G	Xn,Xi	1 mg	kr	131	285	1,527
Pickling brine (agu. sol. of 15 ... 20 % NaCl)	C_2			<25	S	11		1	Q_1(V)	B	V	G	G			fl			
Picric acid (2,4,6-Trinitrophenol)	$C_6H_3N_3O_7$	TA	<L	<40	D	53A		1	Q_1(V)	B	V	G	G	T,E	0,1 mg	kr	122...123		1,69
Pine oil		TA	–	<100	S	11		1	Q_1(S)	B	V	G	G	Xi,N		fl		180...230	0,90...0,97
Polyglycols (Polyalkylene glycols)		S		<100	S	11		1	Q_1(S)	B	V	G	G			fl			
Potash --> *Potassium carbonate*																			
Potash alum --> *Alum*																			
Potash bleaching lye --> *Potassium hypochlorite*																			
Potash lye --> *Caustic potash solution*																			
Potassium bromide	KBr		<L	<25	S,Q	62		1	Q_1(V)	B	P	M	M	6		kr	732	1380	2,75
	KBr		<L	<Kp	D	53A		1	Q_1(V)	B	V	G	G	2,6					
Potassium carbonate (Potash), also see --> *Benfield solution*			<L	<100	S,Q	62		1	Q_1(V)	B	E	G	G	Xi,6		kr	52,5	891	2,428
Potassium chlorate	$KClO_3$		<L	<Kp	D	53A		1	Q_1(V)	B	M_1	G	G	Xn,2,O,N		kr	356	400(Z)	2,34
	$KClO_3$		<L	<60	S,Q	62		1	Q_1(V)	B	V	G	G	Xn,2,O,N					
Potassium chloride	KCl		<L	<60	S,Q	62		1	Q_1(V)	B	E	M	M	6		kr	790	1500(S)	1,984
	KCl		<50	<Kp	D	53A		1	Q_1(V)	B	M_2	G	G						
Potassium cyanate	KOCN		<L	<60	S	11		1	Q_1(V)	B	M_1	G	G	Xn		kr	315	>700(Z)	2,056
Potassium cyanide (Cyanide of potassium)	KCN		<L	<80	D	53A		1	Q_1(V)	B	E	G	G	T+,N		kr	634	1625	1,56

Media					Mechanical seal									Additional information on the medium					
Code of materials and legend see inside of back cover. Please observe the note on page 1.	Chemical formula	Remark	Concentration %	Temp. °C	Arrange-ment	Auxil. piping	Addit. measures	Seal type	Materials to EN 12756 1 Seal face	2 Seal face	3 Sec. seal	4 Spring	5 Others	Hazard warnings	TLV-value	Normal condition	Melting temperature °C	Boiling point °C	Density g/cm³
1		2	3	4	5	6	7	8						10	11	12	13	14	15
Potassium dichromate	$K_2Cr_2O_7$		<L	<40	S,Q	62		1	Q_1(V)	B	E	G	G	T+,Xn,C,R45,R46,R60,6,N		kr		500(Z)	2,7
	$K_2Cr_2O_7$		<L	<Kp	D	53A		1	Q_1(V)	B	M_1	G	G	T+,C,R45,R46,R60,2,6,N					
Potassium hydrogen carbonate (Potassium bicarbonate)	$KHCO_3$		<L	<60	S,Q	62		1	Q_1(V)	B	E	G	G	6		kr	200(Z)		2,17
Potassium hydroxide --> *Caustic potash solution*																			
Potassium hypochlorite	KOCl		<L	<60	S	11		1	Q_1(V)	Q_1(V)	M_2	M	M	C,O		fl			
Potassium nitrate	KNO_3		<L	<60	S,Q	62		1	Q_1(V)	B	P	G	G	6,O		kr	334	400(Z)	2,109
Potassium permanganate	KM_nO_4		<L	<80	S,Q	62		1	Q_1(V)	B	E	G	G	Xn,3,O,N		kr	>240(Z)		2,703
E: 93°C; V: 60°C	KM_nO_4		<L	<Kp	S,Q	62		1	Q_1(V)	B	M_2	G	G	Xn,3,O,N					
Potassium peroxodisulfate (Potassium persulfate)	$K_2S_2O_8$		<20	<60	S,Q	62		1	Q_1	Q_1	V	G	G	Xn,Xi,3,O		kr	~100(Z)		2,48
Potassium phosphates			<L	<Kp	S,Q	62		1	Q_1(V)	B	V	G	G	3		kr			
Potassium silicates			<20	<Kp	D	53A		1	Q_1(S)	B	E	G	G	3,4		kr			
Potassium sulfate	K_2SO_4		<L	<60	S,Q	62		1	Q_1(V)	B	V	G	G	3		kr	1069	1689	2,67
Potato mash --> *Mashes*																			
Potato scrapings		N	<30	<60	S	02	kD	1	Q_1(S)	B	V	G	G			pa			
Potato starch		N	–	<Kp	D	53A		1	Q_1(S)	B	V	G	G	3,4					
Propane, liquefied	C_3H_8	TA	–	>−20	S	11		1	Q_1	A	V	G	G	F+	1000	ga	−187	−42	(+)
Propanediols:																			
1,2-Propanediol (Propylene glycol)	$C_3H_8O_2$		–	<100	S	11		1	Q_1(S)	B	V	G	G			fl	−68	188	1,0381
1,3-Propanediol (Trimethylene glycol)	$C_3H_8O_2$		–	<100	S	11		1	Q_1(S)	B	V	G	G			fl	−26	214	1,0597
Propanols:																			
1-Propanol (n-Propyl alcohol)	C_3H_7OH	TA	–	<Kp	S	11		1	Q_1(S)	B	E	G	G	F,Xi		fl	−127	97	0,804
2-Propanol (Isopropyl alcohol)	C_3H_7OH	TA	–	<Kp	S	11		1	Q_1(S)	B	E	G	G	F,Xi		fl	−89	82	0,7855
Propene, liquefied	C_3H_6	TA	–	>−20	S	11		1	Q_1	A	V	G	G	F+		ga	−185	−48	(+)
Propine, liquefied	C_3H_4	TA	–	>−20	S	11		1	Q_1	A	V	G	G	F+	1000	ga	−103	−23	(+)
Propionaldehyde (Propanal, Propaldehyde)	C_3H_6O	TA	–	<Kp	S	11		1	Q_1(S)	B	M_1	G	G	F,Xi		fl	−81	49	0,807
Propionic acid	$C_3H_6O_2$		–	<Kp	D	53A		1	Q_1(V)	B	M_2	G	G	C	10	fl	−22	141	0,992
Propyl acetates:																			
1-Propyl acetate (n-Propyl acetate)	$C_5H_{10}O_2$	TA	–	<80	S,Q	62		1	Q_1(S)	B	M_2	G	G	F,Xi	200	fl	−92	102	0,887
2-Propyl acetate (Isopropyl acetate)	$C_5H_{10}O_2$	TA	–	<80	S,Q	62		1	Q_1(S)	B	M_2	G	G	F,Xi	200	fl	−73	90	0,872
Propyl alcohols --> *Propanols*																			
Propylene --> Propene																			
Propylene glycols --> *Propanediols*																			
Propylene oxide	C_3H_6O	TA	–	<Kp	D	53A		1	Q_1(S)	B	K	G	G	T,R45,R46,Xi,F+		fl	−112	35	0,83
Prussic acid --> *Hydrocyanic acid*																			
Pulp, cellulose																			
< 1.5 % dry weight				<90	S	11		2	B	Q_1	V	G	G						
< 3 % dry weight				<90	S	02	KD	2	Q_{12}	Q_{12}	V	G	G						
> 3 % dry weight				<90	S	02	kD	3	Q_1	Q_1	V	G	G						
Pydraul		®	–	<80	S	11		1	Q_1(S)	B	E	G	G	U		fl			
Pyridine	C_5H_5N	TA	–	<40	S,Q	62		1	Q_1(S)	B	M_2	G	G	Xn,F	5	fl	−42	115	0,982
Pyrogallol (Pyrogallic acid)		TA	<L	<100	S,Q	62		1	Q_1(V)	B	M_1	G	G	Xn,3		kr	133...134	309	1,453
Pyrrolidone	C_4H_9NO		<L	<100	S			1	Q_1(S)	B	M_3	G	G			kr	25	245	1,116
			Sch	<100	S			1	S	B	M_3	G	G						
P-3 lye, clean			–	<60	S	11		1	Q_1(V)	B	E	G	G			fl			
P-3 lye; containing fats, oils and dirt		V	–	<100	S	11		1	Q_1	Q_1	M_1	G	G			fl			
Q																			
Quench oil		G	–	<200	S	32		1	Q_1	Q_1	M_1	G	G			fl			

Mechanical seal selection by media

Media					Mechanical seal									Additional information on the medium					
Code of materials and legend see inside of back cover. Please observe the note on page 1.	Chemical formula	Remark	Concentration %	Temp. °C	Arrange-ment	Auxil. piping	Addit. measures	Seal type	Materials to EN 12756 1 Seal face	2 Seal face	3 Sec. seal	4 Spring	5 Others	Hazard warnings	TLV-value	Normal condition	Melting temperature °C	Boiling point °C	Density g/cm³
1		2	3	4	5	6	7	8						10	11	12	13	14	15
R																			
Rapeseed oil --> *Colza oil*																			
Raw juice --> *Sugar juices*																			
'Refrigerant oil' saturated with R...		G	–	<100	S	11		1	Q_1	A	M_4	G	G	U		fl			
Refrigerants, DIN 8962																			
R 12B2 (Dibromodi-fluoromethane)	Cbr_2F_2	TA	–	<25	S	11		1	Q_1	A	M_1	G	G	Xi	100	fl	–110	23	2,215
R 14 (Tetrafluoromethane)	CF_4		–	>–40	S	53A		1	Q_1(S)	B	M_4	G	G	1,4		ga	–184	–128	(+)
R 21 (Fluorodichloromethane)	$CHCl_2F$	TA	–	>–40	D	53A		1	Q_1(S)	B	M_4	G	G	N,1,4	10	ga	–135	9	(+)
R 22 (Chlorodifluoromehane)	$CHClF_2$	TA	–	>–40	D	53A		1	Q_1(S)	B	M_4	G	G	N,1,4	V	ga	–160	–41	(+)
R 23 (Trifluoromethane)	CHF_3	TA	–	>–40	D	53A		1	Q_1(S)	B	M_4	G	G	1,4		ga	–155	–82	(+)
R 32 (Difluoromethane)	CH_2F_2	TA	–	>–40	D	53A		1	Q_1(S)	B	M_4	G	G	F+,1,4		ga	–136	–52	(+)
R 116 (Hexafluoroethane)	CF_6	TA	–	>–40	D	53A		1	Q_1(S)	B	M_4	G	G	1,4		ga	–101	–78	(+)
R 133a (2-Chloro-1,1,1-trifluoroethane)	CH_2ClF_3	TA	–	>–40	D	53A		1	Q_1(S)	B	M_4	G	G	N,1,4		ga	–105	6	(+)
R 142b (1-Chloro-1,1-difluoroethane)	CH_3ClF_3	TA	–	>–40	D	53A		1	Q_1(S)	B	M_4	G	G	1,4,F+,N	1000	ga	–131	–10	(+)
R 143a (1,1,1-Trifluoroethane)	$C_2H_3F_3$	TA		>–40	D	53A		1	Q_1(S)	B	M_4	G	G	1,4,F+		ga	–111	–47	(+)
R 152a (1,1-Difluoroethane)	F_2HCCH_3	TA	–	>–40	D	53A		1	Q_1(S)	B	M_4	G	G	F+,1,4		ga	–117	–25	(+)
R 218 (Octafluoropropane)	C_3F_8	TA	–	>–40	D	53A		1	Q_1(S)	B	M_4	G	G	1,4		ga	–183	–37	(+)
R 610 (Decafluorobutane)	C_4F_{10}	TA	–	>–40	D	53A		1	Q_1(S)	B	M_4	G	G	1,4		ga			–2 (+)
R 1112a			–	<20	S	11		1	Q_1	B	M_4	G	G			fl	–127	20	1,555
			–	>20	D	53A		1	Q_1(S)	B	M_4	G	G	1,4					
R 1113 (Chlorotrifluoroethylene)	$CClF_3$	TA	–	>–40	D	53A		1	Q_1(S)	B	M_4	G	G	T,1,4,F+		ga	–158	–28	(+)
R 1122 (Chlorodifluoroethylene)	$CHClF_2$	TA	–	>–40	D	53A		1	Q_1(S)	B	M_4	G	G	1,4,F+,N		ga	–138	–18	(+)
R 1132a (1,1-Difluoroethylene)	$C_2H_2F_2$	TA	–	>–40	D	53A		1	Q_1(S)	B	M_4	G	G	Xn,R40,1,4,F+		ga	–144	–86	(+)
RC 318 (Octafluorocyclobutane)	C_4F_8	TA	–	<–40	D	53A		1	Q_1(S)	B	M_4	G	G	1,4		ga	–41	–6	(+)
Rinsing agent (industrial)			–	<100	S	11		1	Q_1(S)	B		G	G						
					<80	S	S	1	Q_1(S)	B	M_4	G	G						
S																			
Saccharose (sugar)	$C_{12}H_{22}O_{11}$		<L	<Kp	D	53A		1	Q_1(S)	B	V	G	G	3,4		kr	185...186		1,588
Salicylic acid	$C_7H_6O_3$		<L	<25	S	11		1	Q_1(V)	B	E	G	G	Xn		kr	157...159	211(27)	1,44
	$C_7H_6O_3$		Sch	<180	S	53A	(H)	1	Q_1(V)	B	M_2	G	G	Xn,2,3					
Salmiac --> *Ammonium chloride*																			
Salt mashes --> *Mashes*																			
Santotherm --> *Heat transfer oils*		®																	
Sea water --> *Water*																			
Sewage sludge		G		<80	S	32		1	Q_1	Q_1	V	G	G			pa			
Sewage water --> *Water*																			
Shampoo --> *Hair shampoos*																			
Silicon chlorides: Disilicon hexachloride (Hexachlorodisilane)	Si_2Cl_6		–	<Kp	D	53A		1	Q_1(V)	B	M_1	G	G	C,3		fl	–1	147	1,58
Silicon tetrachloride (Tetrachlorosilane)	$SiCl_4$		–	<Kp	D	53A		1	Q_1(V)	B	M_1	G	G	Xi,3		fl	–70	57	1,483
Silicones, silicone oils			–	<100	S	11		1	Q_1(S)	B	E	G	G			fl			
Silver nitrate	$AgNO_3$		<L	<Kp	S,Q	62		1	Q_1	Q_1	M_2	G	G	C,N		kr	212	>250(Z)	4,352
Skin creams		G	–	<60	S	11		1	Q_1(S)	B	V	G	G			pa			
Skydrol --> *Hydraulic fluids HFC*		®																	
Soap solution			–	<Kp	S	11		1	Q_1(S)	B	V	G	G			fl			
Soda --> *Sodium carbonate*																			
Soda lye --> *Caustic soda solution*																			
Sodium acetate	$C_2H_3NaO_2$		<L	<Kp	S	11		1	Q_1(V)	B	M_2	G	G			kr	58	324(Z)	1,54
Sodium bi ... --> *Sodium hydrogen ...*																			
Sodium bleaching lye --> *Sodium hypochlorite*																			
Sodium carbonate (Soda)	Na_2CO_3		<L	<80	S,Q	62		1	Q_1(S)	B	E	G	G	Xi,4		kr	854	>400(Z)	2,532
Sodium chlorate	$NaClO_3$		<L	<Kp	D	53A		1	Q_1(V)	B	M_1	G	G	Xn,3,O,N		kr	255(Z)		2,49

Media					Mechanical seal									Additional information on the medium					
Code of materials and legend see inside of back cover. Please observe the note on page 1.	Chemical formula	Remark	Concentration %	Temp. °C	Arrange-ment	Auxil. piping	Addit. measures	Seal type	Materials to EN 12756 1 Seal face	2 Seal face	3 Sec. seal	4 Spring	5 Others	Hazard warnings	TLV-value	Normal condition	Melting temperature °C	Boiling point °C	Density g/cm³
1		2	3	4	5	6	7	8						10	11	12	13	14	15
Sodium chloride	NaCl		<L	<80	S,Q	11		5	Q_1	Q_1	E	M	M			kr	801	1461	2,164
	NaCl		<5	<30	S	11		1	Q_1(V)	B	E	G	G						
Sodium chlorite	$NaClO_2$		<L	<25	S	11		5	Q_1	Q_1	V	G	G	T,O		kr	>150(Z)		
Sodium cyanide	NaCN		<L	<Kp	D	53A		1	Q_1(V)	B	M_2	G	G	T+,N	5	kr	564	1496	1,546
Sodium dichromate (VI)	$Na_2Cr_2O_7$		<L	<Kp	D	53A		1	Q_1(V)	B	M_1	G	G	C,T+,Xn,R45,R46,O,N	*	kr	357	>400(Z)	2,52
Sodium disulfite	$Na_2S_2O_5$		<L	<100	S	11		5	Q_1	Q_1	V	G	G	Xn,Xi		kr	>150(Z)		1,48
Sodium dithionite	$Na_2S_2O_4$		<L	<60	S,Q	62		5	Q_1	Q_1	E	G	G	Xn,3		kr	>100(Z)		2,37
Sodium hydrogen carbonate (Bicarbonate of sodium, Sodium bicarbonate)	$NaHCO_3$		<L	<60	S	11		5	Q_1	Q_1	E	G	G			kr	270(Z)		2,22
Sodium hydrogen sulfate	$NaHSO_4$		<L	<Kp	S	11		5	Q_1	Q_1	V	G	G	Xi		kr	>315(Z)		2,103
Sodium hydrogen sulfide	NaHS		<L	<Kp	D	53A		1	Q_1(V)	B	V	G	G	T,3		kr	350		1,79
Sodium hydrogen sulfite = aqueous solution of --> *Sodium disulfite*																			
Sodium hydrosulfate --> *Sodium hydrogen sulfate*																			
Sodium hydroxide --> *Caustic soda solution*																			
Sodium hypochlorite ('Chlorine bleaching lye')	NaOCl		<L	<30	S	11		1	Q_1	Q_1	M_2	M	M	C,N		kr			
Sodium metaaluminate	$NaAlO_2$		<L	<60	S	11		5	Q_1	Q_1	E	G	G	C		kr	1650		
Sodium nitrate	$NaNO_3$		<L	<80	S	11		1	Q_1(S)	B	E	G	G	O		kr	307	380(Z)	2,261
Sodium nitrite	$NaNO_2$		<L	<Kp	D	53A		1	Q_1(V)	B	M_2	G	G	T,3,O,N		kr	271	>320(Z)	2,17
Sodium perborate	$NaBO_3 \cdot 4H_2O$		<10	<25	S,Q	62		5	Q_1	Q_1	E	G	G	Xn,3,6,O		kr	>60(Z)		1,731
	$NaBO_3 \cdot 4H_2O$		<10	<Kp	D	53A		1	Q_1(V)	B	M_2	G	G	Xn,2,3,6,O					
Sodium perchlorate	$NaClO_4$		<L	<Kp	D	53A		1	Q_1(V)	B	M_2	G	G	Xn,2,3,O		kr	482(Z)		2,50
Sodium peroxide (Sodium superoxide)	Na_2O_2		<L	<Kp	D	53A		1	Q_1	Q_1	M_2	G	G	C,2,3,O		kr	460	657(Z)	2,8
Sodium phosphates			<L	<Kp	S,Q	62		5	Q_1	Q_1	E	G	G	3,6		kr	1018		1,39
Sodium silicate (Water glass)			<L	<Kp	D	53A		1	Q_1(S)	B	E	G	G	Xi,3,4		kr			
Sodium sulfate (Glauber's salt)	Na_2SO_4		<L	<80	S,Q	62		1	Q_1(V)	B	P	G	G	3		kr	888		2,68
Sodium sulfite	Na_2SO_3		<L	<Kp	S	11		5	Q_1	Q_1	E	G	G			kr	150		2,633
Sodium thiocyanate	NaSCN		<L	<Kp	D	53A		1	Q_1(V)	B	E	G	G	Xn	5	kr	287		1,73
Sodium thiosulfate	$Na_2S_2O_3 \cdot 5H_2O$		<L	<80	S,Q	62		1	Q_1(V)	B	E	G	G	3		kr	48		1,73
Soft soap			–	>F<100	S	11		1	Q_1(S)	B	V	G	G			pa			
Softener --> *Phthalic acid esters*																			
Soiled water --> *Water*																			
Soot-water mixture			<10	<Kp	S	11		1	U_1	U_1	V	G	G			fl			
Soybean oil		N	–	<100	S	11		1	Q_1(S)	B	V	G	G			fl	–16...–10		0,92
Spinach mash		N	–	<80	S	11		1	Q_1(S)	B	V	G	G			pa			
Spirits of salmiac --> *Ammonia aqu. Solutions*																			
Spirit of wine --> *Ethanol*																			
Spirit --> *Ethanol*																			
Steam	H_2O		–	<180	D	53A		1	Q_1(S)	B	E	G	G	1		fl		100	
Stearic acid (Octadecanoic acid)	$C_{18}H_{36}O_2$		Sch	<130	S	11		1	Q_1(V)	B	M_2	G	G			fe	69	370	0,94
Strontium chloride	$SrCl_2$		<L	<Kp	D	53A		1	Q_1(V)	B	M_1	G	G	Xn,2		kr	872		3,094
Strontium nitrate	$Sr(NO_3)_2$		<L	<Kp	D	53A		1	Q_1(V)	B	M_2	G	G	Xi,2,O		kr	570		2,93
Styrene (Vinylbenzene, Phenylethylene)	C_8H_8		–	<80	S,Q	53A		X	Q_1(S)	B	M_1	G	G	Xn,Xi,3,4	20	fl	–33	146	0,909
Succinic acid	$C_4H_6O_4$		<L	<Kp	S	11		1	Q_1(S)	B	M_1	G	G	Xi		kr	186	235	1,56
Sugar juices (conc. data in Brix):																			
Clairce			>70	<95	D	53A		1	Q_{12}	Q_{12}	V	G	G						
Raw juice			<20	<70	D	11		1	Q_{12}	Q_{12}	V	G	G						
Thick juice			>70	<95	D	53A		1	Q_{12}	Q_{12}	V	G	G						
Thin juice			<20	<100	D	11		2	Q_{12}	Q_{12}	V	G	G						
Sulfamic acid --> *Amidosulfuric acid*																			
Sulfite lye --> *Calcium hydrogen sulfite*																			
Sulfolan --> *Tetrahydro-thiophene-1,1-dioxide*																			
Sulfur chlorides: Disulfur dichloride	S_2Cl_2		–	<Kp	D	53A		1	Q_1(V)	B	M_1	G	G	T,C,2,N	1	fl	–80	136	1,678
Sulfur dichloride	SCl_2		–	<Kp	D	53A		1	Q_1(V)	B	M_1	G	G	C,2,N		fl	–122	59	1,621
Sulfur dioxide	SO_2		–	<80	D	53A		1	Q_1(V)	B	E	G	G	T,1	2	ga	–75	–10	(+)

Mechanical seal selection by media

Media					Mechanical seal									Additional information on the medium					
Code of materials and legend see inside of back cover. Please observe the note on page 1.	Chemical formula	Remark	Concentration %	Temp. °C	Arrange-ment	Auxil. piping	Addit. measures	Seal type	Materials to EN 12756 1 Seal face	2 Seal face	3 Sec. seal	4 Spring	5 Others	Hazard warnings	TLV-value	Normal condition	Melting temperature °C	Boiling point °C	Density g/cm³
1		2	3	4	5	6	7	8						10	11	12	13	14	15
Sulfur fluorides:																			
Disulfur decafluoride (Sulfur pentafluoride)	S_2F_{10}		–	<Kp	S,Q	62		1	Q_1(V)	B	M_2	G	G			fl	–92	29	2,08(0)
Disulfur difluoride (Thiothionylfluoride)	S_2F_2		–	<60	D	53A		1	Q_1(V)	B	M_2	G	G	1	0,025	ga	–164	~–11	(+)
Sulfur hexafluoride	SF_6		–	<60	D	53A		1	Q_1(V)	B	M_2	G	G	1	1000	ga	–51	–64(S)	(+)
Sulfur tetrafluoride	SF_4		–	<60	D	53A		1	Q_1(V)	B	M_2	G	G	T+,C,1		ga	–121	–40	(+)
Sulfur tetrafluoride --> *Sulfur fluorides*																			
Sulfur trioxide (molten or gaseous)	SO_3		–	>F<160	D	54		1	Q_1	Q_1	M_1	G	G	C,1,2,3,4		kr	17...62	45	1,97...2,00
Sulfur, molten	S		Sch	<220	S	01	(H)	6	A	Q_1	U_1	M_6	G_1	F		kr	110...119	444	1,96...2,07
	S		Sch	<200	S	01	H	1	Q_1	A	M_1	G	G						
Sulfuric acid	H_2SO_4		<10	<30	S,Q	62		1	Q_1(V)	B	V	G	G	Xi			5% –2	5% 101	5% 1,032
	H_2SO_4		<10	<30	S,Q	62		1	Q_1(V)	B	M_1	M	M	Xi,2			10% –5	10% 102	10% 1,066
	H_2SO_4		<20	<30	S,Q	62		1	Q_1(V)	B	M_1	M	M	C,2			20% –14	20% 105	20% 1,139
	H_2SO_4		<96	<30	S,Q	62		1	Q_1(V)	B	V	M	M	C,2			40% –68	40% 113	40% 1,303
	H_2SO_4		>80	<30	S,Q	62		1	Q_1	Q_1	V	G	G	C			60% –29	60% 140	60% 1,498
	H_2SO_4		>90	<30	S,Q	62		1	Q_1	Q_1	V	G	G	C			80% –1	80% 205	80% 1,727
	H_2SO_4		>90	<30	S,Q	62		1	Q_1	Q_1	M_1	M	M	C,2			96% –11	96% 310	96% 1,835
	H_2SO_4			<20													98% +2	98% 330	98% 1,836
Sulfuric acid, fuming (= Oleum = conc. H_2SO_4 + free SO_3)	$H_2SO_4+SO_3$		<40	<30	S,Q	62		4	Q_1	Q_1	M_1	M	M					40%~100	
	$H_2SO_4+SO_3$		<60	<30	S,Q	62		1	Q_1	Q_1	M_1	M	M	C,Xi				60%~70	
Sulfurous acid (aqueous solution of SO_2)	H_2SO_3		<L	<Kp	S,Q	62		1	Q_1(V)	B	M_2	M	M			fl			
	H_2SO_3		<L	<20	S,Q	11		1	Q_1(V)	B	E	G	G	C,2					
Synthetic resin laquers and glues		S	–	<Kp	D	53A		1	Q_1(S)	B	M_1	G	G	3,4		fl			
T																			
Table salt --> *Sodium chloride*																			
Table vinegar --> *Acetic acid*																			
Tall oil fatty acids			Sch	<200	S,Q	62		1	Q_1	A	M_1	M	M	3		fe			
			Sch	>200	S,Q	62		6	A	Q_1	G	M_5	M	3					
Tall oil pitch			Sch	<150	S,Q	62		1	Q_1	A	M_1	M	G	Xi,3		fe			
Tall oil resin (acids)			Sch	<200	S,Q	62		1	Q_1	A	M_1	M	M	3		fe			
			Sch	>200	S,Q	62		6	A	Q_1	G	M_5	M	3					
Tall oil, crude			Sch	<120	S,Q	62		1	Q_1	A	M_1	G	G	3		pa			0,95
Tallow			Sch	<100	S	11		1	Q_1(S)	B	V	G	G			fe	40...70		
Tannery waste water, pH = 9 – 11			–	<40	S	11		1	Q_1(V)	B	V	G	G			fl			
Tannic acids --> *Tannines*																			
Tannines (natural Polyphenols)		G	<L	<100	S	11		1	Q_1(S)	B	V	G	G			fe			
Tar, tar oil --> *Coal tar*																			
Tartaric acid			<L	<60	S	11		1	Q_1(S)	B	V	G	G	Xi		kr	~170		1,76...1,79
Taurine (2-Aminoethan-esulfonic acid)	$C_2H_7NO_3S$		<L	<80	S	11		1	Q_1	B	M_1	G	G	Xi		kr	328(Z)		
Terphenyls (diphenyl benzenes):	$C_{18}H_{14}$																		
m-Terphenyl (1,3-Diphenyl benzene)	$C_{18}H_{14}$		Sch	<180	S,Q	62	(H)	1	Q_1(S)	B	M_1	G	G	Xi,3		kr	89	365	
o-Terphenyl (1,2-Diphenyl benzene)	$C_{18}H_{14}$		Sch	<180	S,Q	62	(H)	1	Q_1(S)	B	M_1	G	G	Xn,3		kr	57...58	332	
p-Terphenyl (1,4-Diphenyl benzene)	$C_{18}H_{14}$		Sch	<Kp	S,Q	62	(H)	6	A	Q_1	G	M_6	T4	Xi,3		kr	213	404	1,234
Tetrabromoethane (Acetylene tetrabromide)	$C_2H_2Br_4$	TA	–	<160	D	53A		1	Q_1(V)	B	M_1	G	G	T+,Xi	1	fl	0	135	2,9673
Tetrachloroethane (Acetylene tetrachloride)	$C_2H_2Cl_4$	TA	–	<Kp	D	53A		1	Q_1(V)	B	M_1	G	G	T+,N	1	fl	–42	146	1,5953
Tetrachloroethylene (Perchloroethylene)	C_2Cl_4	TA	–	<60	S	11		1	Q_1(S)	B	M_1	G	G	Xn,R40,N	50	fl	–23	121	1,63
Tetrachloroethylene, contaminated		TA	–	<60	S	11		1	Q_1(V)	B	M_1	G	G	Xn,R40,N					
Tetrachloromethane --> *Carbon tetrachloride*																			
Tetraethylene glycol --> *Ethylene glycols*																			
Tetrahydrofuran (Tetramethylene oxide, Oxolane)	C_4H_8O	TA	–	<40	S,Q	62		1	Q_1(V)	B	M_2	G	G	Xi,F6	200	fl	–108	65	0,8892

Media					Mechanical seal									Additional information on the medium					
Code of materials and legend see inside of back cover. Please observe the note on page 1.	Chemical formula	Remark	Concentration %	Temp. °C	Arrange-ment	Auxil. piping	Addit. measures	Seal type	Materials to EN 12756 1 Seal face	2 Seal face	3 Sec. seal	4 Spring	5 Others	Hazard warnings	TLV-value	Normal condition	Melting temperature °C	Boiling point °C	Density g/cm³
1		2	3	4	5	6	7	8						10	11	12	13	14	15
Tetrahydrothiophene-1,1-dioxide ('Sulfolan')	$C_4H_8O_2S$		Sch	<60	S	11	(H)	1	Q_1(V)	B	M_1	G	G	Xn		kr	27	285	1,26
Thick juice --> *Sugar juices*																			
Thick liquor (Sulfite chemical pulp)		G	–	<Kp	D	53A		1	Q_1(V)	B	M_1	G	G						
Thin juice --> *Sugar juices*																			
Thiols		G	–	<Kp	D	53A		1	Q_1(V)	B	M_1	G	G	U	0,5	fl			
Thiothionyl fluoride --> *Sulfur fluorides*																			
Throat gas --> *Blast furnace gas*																			
Titanium chlorides: Titanium(IV) chloride (Titanium tetrachloride)	$TiCl_4$		–	<Kp	D	53A		1	Q_1(V)	B	M_1	G	G	C,2,3		fl	–25	136	1,726
Titanium(III) chloride (Titaniumtrichloride)	$TiCl_3$		<L	<Kp	D	53A		1	Q_1(V)	B	M_1	G	G	C,2,3,F		kr	440(Z)		2,64
Titanium dioxide – Solution in sulfuric acid	TiO_2		<L	<180	S	02	kD	X	Q_1	Q_1	T	M	G	C,2					
Titanium dioxide – Suspension in water			<40	<Kp	S,Q	53A		X	U_2	Q_1(V)	E	G	G	4		kr	>1800		3,9...4,26
Tobacco emulsion			–	<60	S	11		1	Q_1	Q_1	V	G	G			fl			
Toluene	C_7H_8	TA	–	<60	S	11		1	Q_1(S)	A	K	G	G	Xn,Xi,R63,F	100	fl	–95	111	0,866
Tomato juice --> *Ketchup*																			
Tooth pastes		G	–	<40	S	11		1	Q_1	Q_1	V	G	G			pa			
Tributyl phosphat (TBP, Phosphoric acid tributyl ester)	$C_{12}H_{27}O_4P$	TA	–	<60	S	11		1	Q_1(V)	B	M_1	G	G	Xn,Xi,R40		fl	–79	293	0,979
Trichloroacetic acid (TCA)	$C_2HCl_3O_2$	TA	Sch	<Kp	D	53A	SW,H	1	Q_1(V)	B	M_2	G	G	C,2,3,N		kr	59	198	1,63(60)
Trichloroborane --> *Boron trichloride*																			
1,1,2-Trichloroethane	$C_2H_3Cl_3$	TA	–	<60	S,Q	62		1	Q_1(V)	B	M_1	G	G	Xn,R40	10	fl	–35	113...114	1,4416
Trichloroethylene	C_2HCl_3	TA	–	<25	S	11		1	Q_1(V)	B	V	G	G	T,Xi,R45	50	fl	–86	87	1,4649
	C_2HCl_3	TA	–	<60	S,Q	62		1	Q_1(S)	B	M_1	G	G	T,Xi,R45,6					
Trichloronitromethane (Chloropicrine)	CCl_3NO_2	TA	–	<60	S,Q	62		1	Q_1(V)	B	M_1	G	G	T+,Xi,6	0,1	fl	–64	112	1,6566
Tricresyl phosphate (TCP)	$C_{21}H_{21}O_4P$	TA	–	<100	S	11		1	Q_1(S)	B	M_2	G	G	T,N		fl	–28	435	1,17...1,18
Triethanolamine	$C_6H_{15}NO_3$		–	<60	S	11		1	Q_1(S)	B	M_2	G	G			fl	21	360	1,1242
Triethylamine	$C_6H_{15}N$	TA	–	<60	S,Q	62		1	Q_1(S)	B	M_2	G	G	Xn,C,F	10	fl	–115	89	0,728
Triethylene glycol --> *Ethylene glycols*																			
Trifluoroborane --> *Boron trifluoride*																			
Triglycol --> *Ethylene glycols*																			
Trisodium phosphate --> *Sodium phosphates*	S																		
Tung oil --> *Wood oil*																			
Turbine oils			–	<100	S	11		1	Q_1(S)	B	V	G	G	U		fl			
Turkey red oil			–	<140	S	11		1	Q_1(S)	B	M_1	G	G			fl			1,03
Turpentine, oil		TA,G	–	<60	S	11		1	Q_1(S)	B	V	G	G	Xn,Xi,R46,N	100	fl		155...180	0,85...0,87
Tutogen		®	–	<60	S	11		1	Q_1(S)	B	V	G	G			fl			
U																			
Urea (Carbamide)	CH_4N_2O		<L	<100	D	53A		1	Q_{22}	Q_1(V)	E	G	G	3,4		kr	132		1,323
	CH_4N_2O		<L	<100	D	53A		5	Q_1	Q_1	E	G	G	3,4					
Urea nitrate	$CH_5N_3O_4$		<10	<60	S	11		1	Q_1	Q_1	M_2	G	G			kr	152(Z)		1,69
Urea phosphate	$CH_7N_2O_5P$		<10	<60	S	11		1	Q_1	Q_1	M_2	G	G	Xi		kr	119		
Urea resins (DIN 7728: abbr. UF)		G	–	<100	D	53A		1	Q_{22}	Q_1(V)	M_2	G	G	3,4		pa			
Urine			–	<40	S	11		5	Q_1	Q_1	E	G	G			fl			

Mechanical seal selection by media

Media					Mechanical seal									Additional information on the medium					
Code of materials and legend see inside of back cover. Please observe the note on page 1.	Chemical formula	Remark	Concentration %	Temp. °C	Arrange-ment	Auxil. piping	Addit. measures	Seal type	Materials to EN 12756 1 Seal face	2 Seal face	3 Sec. seal	4 Spring	5 Others	Hazard warnings	TLV-value	Normal condition	Melting temperature °C	Boiling point °C	Density g/cm³
1		2	3	4	5	6	7	8						10	11	12	13	14	15
V																			
Varnishes		G	–	TG	D	53A		1	Q_1(V)	B	M_1	G	G	3,4		fl			
Vaseline --> *Petrolatum*																			
Vegetable oils		G	0	<150	S	11		1	Q_1(S)	B	V	G	G			fl			
Vegetable mash			–	<100	S	11		1	Q_1(S)	B	V	G	G			pa			
Vinyl acetate --> *Acetic acid vinyl ester*																			
Vinyl acetylene (Butenyne)	C_4H_4	TA	–	<60	D	53A		1	Q_1(V)	B	M_2	G	G	1,3		ga	–92	5	(+)
Vinylbenzene --> *Styrene*																			
Vinyl chloride	C_2H_3Cl	TA	–	<40	D	53A		1	Q_1(V)	B	M_1	G	G	T,R45,F+,1	*	ga	–154	–14	(+)
Vinylidene chlorides --> *Dichloroethenes*																			
Volatile oils		S	–	<Kp	S	11		1	Q_1(S)	B	M_1	G	G	U		fl			
W																			
Walnut oil		N	–	<100	S	11		1	Q_1(S)	B	V	G	G			fl			~0,92
Washing lye		S	–	<Kp	S	11		1	Q_1(S)	B	M_1	G	G			fl			
Washing lye, dirty		S	–	<Kp	S	11		1	Q_1	Q_1	M_1	G	G			fl			
Wastewater --> *Water*																			
Water from pressed fish		N	Sus	<60	S	02		1	Q_1	Q_1	V	G	G			fe			
Water glass --> *Sodium silicates*																			
Water vapour (Steam)	H_2O		–	<180	D	53A		1	Q_1(S)	B	E	G	G	1					
Water:	H_2O																		
Wastewater, sewage water, pH>6<10			–	<50	S	11		1	Q_1	Q_1	P	G	G			fl			
Wastewater, sewage water, pH>3<10			–	<50	S	11		5	Q_1	Q_1	V	G	G			fl			
Drinking water, industrial water			–	<50	S	11		1	Q_1(S)	B	E	G	G			fl			
Drinking water, industrial water			–	<100	S	11		1	Q_1(S)	B	E	G	G			fl			
Hot water with additives			*As compositions and applications vary considerably, a general recommendation would not be adequate.*																
Boiler feed water			*Please contact EagleBurgmann.*																
Sea and brackish water			–	<50	S	11		5	A	Q_1	V	M	M			fl			
Waxes		S	–	>F<180	S	11		1	Q_1(S)	B	V	G	G			pa			
Whale oil		N	–	<100	S	11		1	Q_1(S)	B	V	G	G			fl			
Whey		N	–	<60	S	11		1	Q_1(S)	B	V	G	G			fl			
Whiskey			–	<30	S	11		1	Q_1(V)	B	E	G	G			fl			
White spirit		TA	–	<60	S	11		1	Q_1(S)	B	V	G	G	Xn,N		fl	<–15	153...198	
Wine			–	<40	S	11		1	Q_1(S)	B	P	G	G			fl			
Wine vinegar --> *Acetic acid*																			
Wood oil (Tung oil)		N	–	<80	S	11		1	Q_1(S)	B	V	G	G	Xi		fl	<0		0,89...0,93
Wood pulp, ground pulp --> *Pulp, (cellulose)*																			
Wood spirit --> *Methanol*																			
Wood tar		G	–	<100	S	11		1	Q_1(S)	B	M_1	G	G	U		fl			0,90...1,11
Wood turpentine oil --> *Tall oil*																			
X																			
Xanthogenates		S	<10	<60	D	53A		1	Q_1	Q_1	M_1	G	G	3,4		kr			
Xenon	Xe		–	<40	D	53A		1	Q_1(S)	B	P	G	G	1		ga	–112	–108	(+)
Xylenes (Dimethylbenzenes):																			
technical Xylene (mixture)	C_8H_{10}		–	<60	S	11		1	Q_1(S)	B	M_1	G	G	Xn,Xi	100	fl	–63	137...140	~0,86
m-Xylene	C_8H_{10}		–	<60	S	11		1	Q_1(S)	B	M_1	G	G	Xn,Xi	100	fl	–48	139	0,866
o-Xylene	C_8H_{10}		–	<60	S	11		1	Q_1(S)	B	M_1	G	G	Xn,Xi	100	fl	–25	144	0,881
p-Xylene	C_8H_{10}		–	<60	S	11		1	Q_1(S)	B	M_1	G	G	Xn,Xi	100	fl	13	138	0,861

Media					Mechanical seal									Additional information on the medium					
Code of materials and legend see inside of back cover. Please observe the note on page 1.	Chemical formula	Remark	Concentration %	Temp. °C	Arrange-ment	Auxil. piping	Addit. measures	Seal type	Materials to EN 12756 1 Seal face	2 Seal face	3 Sec. seal	4 Spring	5 Others	Hazard warnings	TLV-value	Normal condition	Melting temperature °C	Boiling point °C	Density g/cm³
1		2	3	4	5	6	7	8						10	11	12	13	14	15
Y																			
Yeast mash		N	–	<60	S	11		1	Q_1(S)	B	V	G	G			pa			
Yoghurt with fruits etc.		N	–	<60	S	11		5	Q_1	Q_1	V	G	G			pa			
Yoghurt without fruits etc.		N	–	<60	S	11		1	Q_1	B	V	G	G			pa			
Z																			
Zapon lacquer		TA	–	<60	D	53A		1	Q_1(V)	B	M_1	G	G	Xn,3,4,FN		fl			
Zinc chloride	$ZnCl_2$		<L	<25	S	11		5	Q_1	Q_1	V	G	G	C,Xn,4,6,N		kr	318	732	2,91
	$ZnCl_2$		<L	<Kp	D	53A		1	Q_1(V)	B	M_1	G	G	C,Xn,2,4,N					
Zinc cyanide (suspension)	$Zn(CN)_2$		<20	<Kp	S	02	kD	3	Q_1	Q_1	P	G	G	T+,N		kr	~800(Z)		1,852
Zinc nitrate	$Zn(NO_3)_2$*$6H_2O$		<L	<60	S,Q	62		5	Q_1	Q_1	V	G	G	Xn,6,O		kr	36	105...131	2,065
Zinc oxide (suspension)	ZnO		<50	<Kp	S,Q	53A	kD	3	Q_1	Q_1	V	G	G	3,4,N	5 mg	kr	1975		5,606
Zinc paints, water soluble			<L	<60	S,Q	62		5	Q_1	Q_1	V	G	G	6		fl			
Zinc phosphate	$Zn_2(PO_4)_2$		<10	<100	D	53A		1	Q_1(V)	B	M_1	G	G	3,4,N		kr	>900		
Zinc sulfate (Zinc vitriol)	Zn_2SO_4•$7H_2O$		<L	<60	S,Q	62		5	Q_1	Q_1	V	G	G	Xn,6,N		fe	100		1,97

Additional EagleBurgmann product lines

Compression packings

A cost effective and reliable method for sealing pump shafts, valve spindles and rotating shafts in process equipment. Manufactured from a range of material combinations – traditional and innovative- using state-of-the-art production techniques. Supplied in boxed lengths or pre-cut rings. Approvals/certification includes BAM, DVGW, FDA, API, ISO, TA-Luft. Fire-safe, low leakage and nuclear grades are available with full documentation and certification.

Rotatherm® graphite rings
An accepted industry-standard for valves and pumps in high pressure and high temperature service. Manufactured as moulded rings (with and without steel reinforcement) or special seals. Suits all industry applications including the power and nuclear industries. Approvals/certification includes: BAM, DVGW, API, ISO, TA-Luft.

BuraTAL® Fugitive emission products
A comprehensive range of low leakage packing sets manufactured in graphite or our unique non-woven materials. All current fugitive emission standards are met with outstanding performance, low friction, ease of installation, and a long service life. Approvals/certification includes: API 622, ISO 15848, TA-Luft.

Burajet® Injectable packings
The Burajet® Injectable packing system offers a wide range of injectable compounds for pumps, valves, and process equipment. An ideal product for the mining and paper & pulp industries. Approvals/Certification includes: FDA.

Buraglas® Glass packings
Manufactured from non-ceramic materials and fibres, BuraGlas® packings are suitable for sealing of vessels, coal mills, industrial furnaces, oven doors, hatches and covers. Produced in lengths in sizes up to 150 mm section. Approvals/Certification: Hydrolytische Klasse 1; DIN 12111.

Packing cartridges
Packing cartridges combine quick and easy installation with robust simple construction to provide minimum downtime and maximum reliability in critical process applications. Manufactured to individual requirements to fit into DIN/ASME standard equipment e. g. agitators. Cartridges can be supplied with live-loading and additional bellows containment for maximum environmental safety.

Typical applications:
Pumps, agitators, mixers, kneaders, dryers, fans, blowers, filters, refiners, pulpers, mills, valves

Gaskets

Fibre gasket sheets
Burasil®-Basic, -Universal and Buratherm® N gasket sheets for service in low to medium pressure and temperature applications for process equipment and pipework in industry and for utility applications like gas and water supply. Approvals/certification includes: DVGW, KTW, HTB, WRAS, WRC, TA-Luft, BAM (Oxygen max. = 120 °C/130 bar).

PTFE gasket sheets and tapes
Burachem® is a highly chemical resistant modified PTFE gasket material range offering varying properties of mechanical strength and chemical resistance depending upon application. Approvals/certification includes: DVGW, KTW, HTB, WRAS, WRC, BAM (Oxygen max. = 120 °C / 130 bar), TA-Luft.
Quick-Seal® MultiTex tape is the latest development in the field of expanded PTFE sealing materials for in-place sealing of vessel and pipe flanges.

Graphite seals and tapes
Statotherm® Graphite gasket sheets, tapes
Soft, flexible, graphite gasket sheets ideal for pump, valve, and equipment gaskets.
Statotherm® R Profile rings for static sealing in high temperature applications, e. g. in heat exchangers, valves or pumps.
Statotherm® V and V-Flex cover seals are used as self-sealing gaskets in high-pressure valves e.g. for power plants at high temperatures. Statotherm® V-Flex is supplied by the meter.

Metal gaskets
Approvals/certification include BAM, DVGW, TA-Luft.
Spiraltherm® spiral wound gaskets. Available to suit all international flange standards and in a wide choice of materials.
Corratherm® corrugated gaskets are for heavy duty applications. Kammprofile serrated gaskets are for applications with high demands for operating safety and tightness.
Buralloy® metal jacketed gaskets are produced in a wide variety of different materials (in various combinations), in many styles for heat exchangers, pipe flanges, boilers, and process equipment.
Buralloy® ring type joints are available to suit all ASME and DIN flanges from stock. Sizes: 15 ... 900 mm (0.5 ... 36"); manufactured to ASME B16.20 and to API 6A.

Typical applications:
Stationary machine parts, flanges, flange-like joints

Please inquire for more information.

Additional EagleBurgmann product lines

Expansion joints

Flexible expansion joints in pipes and duct systems neutralize the effects of pressure and temperature fluctuation, vibration and misalignment at the joint. They must also be leakproof and resistant to media. Customized expansion joints made of fabric, metal or rubber are the solution of choice.

Fabric expansion joints
- Single and multi layer designs
- Temperature: –65 °C ... +1,200 °C *(–85 °F ... +2,192 °F)*
- Pressure: –0.35 barg ... 0.35 barg *(–5.08 ... 5.08 PSID)*
- Versions with wiremesh reinforcement
- Versions with high chemical resistance

Metal expansion joints
- Temperature: –200 °C ... +1,400 °C *(–328 °F ... +2,552 °F)*
- Pressure: vacuum ... 140 barg *(2,031 PSID)*
- Materials: stainless steel, Incoloy® Inconel®, Hastelloy®, titanium, special materials
- Versions with PTFE lining

Rubber expansion joints
- Temperature: –40 °C ... 160 °C *(–40 °F ... 320 °F)*
- Pressure: vacuum ... 25 barg *(... 363 PSID)*
- Standard series DN 20 ... 750 mm *(3/4" ... 30")*
- Engineered series DN 50 ... 3,600 mm *(2" ... 144")*
- Multiple arch designs
- PTFE versions with good chemical resistance: 0 ... 14 pH
- Variants with drinking water approvals

Typical applications:
Air and flue gas ducts, pipelines, sewer systems

Special products

For particular applications, innovative, customized solutions are the only answer. The supplier must have a wealth of in-depth expertise, many years of experience and above all the willingness and ability to translate ideas into solutions that work in practical application.

Contoured diaphragm couplings
For demanding rotating equipment such as turbines and compressors in the oil and gas industries as well as petrochemicals, conventional and nuclear power generation, marine applications and the aerospace industry.

They are lightweight, easy to install and maintain, and demonstrate high reliability in stress analysis. Low bearing load, best dynamic balance repeatability and no fretting or wearing are advantages of the coupling. Uniquely shaped flexible elements in the metal diaphragms located at each end of the spacers attain optimum performance. Additional features:

- Couplings acc. to API 671 / ISO10441 or API 610 / ISO13709
- Multi diaphragms, compensation for large misalignments
- Low (Reduced) moment
- Electrically insulatet
- Spark resistant materials
- Tuned for rotor dynamics
- Torque overload releasing device
- Torque measuring system

Operating range: Max. torque: 2,700 kNm,
max. speed: 100,000 min^{-1}

High-grade metal bellows
for specialized applications in the nuclear power, semi conductor and medical equipment industries, etc.

Dynamic and static sealing elements
for the aerospace industry which meet extremely demanding quality requirements

Stern tube and marine seals
with various approvals and certifications, for marine outfitters and users

Rotary kiln sealing systems
as single and double seals in drying, calcination, combustion and pyrolysis applications

Typical applications:
Engineered solutions designed to meet customer requirements

TotalSealCare™ service modules

The modular seal service offered through TotalSealCare™ is as individual as are the demands of our customers. The range of services spans complete maintenance of all installed seals, through to stock management, as well as engineering, training and electronic data documentation.

Our TotalSealCare™ services consist of individual modules from which we assemble individualized service packages.

You can benefit from our many years of experience and expertise in all areas of seal technology, and our major store of practical knowledge.

1 Consulting & engineering

After establishing and analyzing all of the seals in a system, we work out standardization concepts based on the as-is status. The results we are hoping for are to reduce the number of seal types, sizes and materials used, and to improve the key figures of the system. We advise you relating to codes of practice and statutory regulations, and indicate what actions need to be taken.

2 Maintenance

In the plant or in the service center, qualified fitters and technicians look after all the aspects of seal maintenance: installation, startup, servicing, conversion, overhaul and repair. We record and document functionally relevant data (fault causes, measures for repair, costs). This means it is possible to assess seal operating times and maintenance costs on a continuous basis, thereby defining measures for extending service intervals.

3 On-site service

Our on-site service includes the components of an overhaul service, conversions and service container. We deploy a service unit directly on your premises: equipped with the basic suite of seals or a stock of seals discussed with you in advance, and staffed by qualified personnel. On-site, our work includes producing the necessary gaskets, ensuring that the documentation is complete and advising our customers on selecting and installing seals. Our range of services is rounded off by complete conversions (e. g. acc. to TA-Luft).

4 Inventory management

Based on your individual requirements and the applicable quality regulations, we develop a concept for inventory management of complete seals and spare parts. Furthermore, we optimize stocking on site or in the EagleBurgmann service center. In this way, you can reduce your administration overhead and concentrate on your key operations.

5 Seminars & training

We offer an extensive range of continuing education programs in seal technology. For service and maintenance personnel, skilled staff and engineers from various branches of industry such as refining, chemicals, power generation, foodstuffs, paper and pharmaceuticals. Our range includes group seminars, individual training and seminars specifically tailored to your requirements. At our premises or at a location of your choice.

6 Technical analysis & support

A team of seal specialists is responsible for rectifying process malfunctions or “bad actors”. The latest methods such as thermography or data logging are used for diagnosing positions that are critical for the operation of the system and for working out measures to rectify them. In our research and development centers, we perform realistic tests on test rigs or in original pumps. The objective is to extend the MTBF and to increase system serviceability by individual and constructive solutions.

7 Service agreements

We offer our customers specific agreements that can be combined from the six service modules. Whether for individual seal systems, critical process elements, specific system areas or an extensive seal service for complete plants: the modular structure of our service makes it possible to satisfy individual requirements. With our tried-and-tested monitoring instrument, SEPRO, we can also record all data relevant for the seals for documentation and evaluation purposes.

Table of materials

Material code 1)EN 12756	Material code EagleBurgmann	Description
Face materials (Item 1/2)		
Synthetic carbons		
▶ A	Buko 03	Carbon graphite antimony impregnated
▶ B	Buko 1	Carbon graphite resin impregnated, approved for foodstuffs
B3	Buko 02	Carbon graphite resin impregnated
B5	Buko 34	Carbon, resin bonded
C	Buko 22	Electrographite antimony impregnated
Metals		
▶ E	Bume 20	Cr steel
G	Bume 17	CrNiMo steel
▶ S	Bume 5	Special cast CrMo steel
T41	Bube 281	1.4462 DLC-coated
Carbides		
U = Tungsten carbides		
▶ U1	Buka 1 brazed	Tungsten carbide, Co-binder
▶ U2	Buka 16 solid	Tungsten carbide, Ni-binder
▶ U22	Buka 16 shrunk-in	Tungsten carbide, Ni-binder
U3	Buka 15 solid	Tungsten carbide, NiCrMo-binder
U37	Buka 15 shrunk-in	Tungsten carbide, NiCrMo-binder
U7	Buka 17 solid	Tungsten carbide, binder-free
Q = Silicon carbides		
▶ Q1	Buka 22 solid	SiC, silicon carbide, sintered pressureless
▶ Q12	Buka 22 shrunk-in	SiC, sintered pressureless
▶ Q2	Buka 20 solid	SiC-Si, reaction bonded
▶ Q22	Buka 20 shrunk-in	SiC-Si, reaction bonded
Q3	Buka 30 solid	SiC-C-Si, carbon silicon impr.
Q32	Buka 30 shrunk-in	SiC-C-Si, carbon silicon impr.
Q6	Buka 32 solid	SiC-C, SiC sintered pressureless with carbon
Q4	Buka 24 solid	C-SiC, carbon surface silicated
Q19	Buka 221	SiC, DLC-coated
Q15	Buka 225	SiC, DiamondFace®
Metal oxides (Ceramics)		
V	Buke 5	Al-Oxide > 99 %
V2	Buke 3	Al-Oxide > 96 %
X	Buke 8	Steatite (Magnesia silicate)
Plastics		
▶ Y1	Buku 2	PTFE glassfibre reinforced
Y2	Buku 3	PTFE carbon reinforced

Material code 1)EN 12756	Material code EagleBurgmann	Description
Secondary seal components (Item 3)		
Elastomers, not wrapped		
B	B	Butyl rubber (IIR2))
▶ E	E	Ethylene propylene rubber (EPDM2)) e. g. Nordel®
K	K	Perfluorocarbon rubber (FFKM2)) e. g. Kalrez®, Chemraz®, Simriz®
N	N	Chloroprene rubber (CR2) e. g. Neopren®
▶ P	P	Nitrile-butadiene-rubber (NBR2)) e. g. Perbunan®
S	S	Silicone rubber (VMQ2)) e. g. Silopren®
▶ V	V	Fluorocarbon rubber (FKM2)) e. g. Viton®
X	X4	Hydrogenated Nitrile-rubber (HNBR2))
X	X5	Tetrafluoroethylene propylene rubber (FEPM2)) e. g. Aflas®, Fluoraz®
Elastomers, wrapped		
▶ M1	TTV	FKM, double PTFE wrapped
▶ M2	TTE	EPDM, double PTFE wrapped
M3	TTS	VMQ, double PTFE wrapped
M4	TTN	CR, double PTFE wrapped
M5	FEP	FKM, FEP wrapped
M7	TTV/T	FKM double PTFE wrapped/ PTFE solid
Differing materials		
U1	K/T	Perfluorocarbon rubber/PTFE
Non-Elastomers		
G	Statotherm®	Pure graphite
T	T	PTFE (Polytetrafluoroethylene)
T2	T2	PTFE glass fiber reinforced
T3	T3	PTFE carbon reinforced
T12	T12	PTFE carbon-graphite reinforced
Y1	Burasil®-U	Plastic fiber/Aramid

Material code 1)EN 12756	Material code EagleBurgmann	Description
Spring and construction materials (Item 4/5)		
Spring materials		
▶ G	1.4571	CrNiMo steel
▶ M	2.4610	Hastelloy® C-4 Nickel-base alloy
Construction materials		
D	St	C steel
▶ E	1.4122	Cr steel
F	1.4301	CrNi steel
F	1.4308	CrNi cast steel
F1	1.4313	Special cast CrNi steel
▶ G	1.4401	CrNiMo steel
▶ G	1.4571	CrNiMo steel
G	1.4581	CrNiMo cast steel
▶ G1	1.4462	CrNiMo steel – Duplex
G2	1.4439	CrNiMo steel
G3	1.4539	NiCrMo steel
▶ G4	UNSS32760-Nor	CrNiMoCu steel - Superduplex
M = Nickel-base alloy		
▶ M	2.4610	Hastelloy® C-4
M1	2.4617	Hastelloy® B-2
M3	2.4660	Carpenter® 20 Cb3
M4	2.4375	Monel® alloy K500
M5	2.4819	Hastelloy® C-276
M6	2.4668	Inconel® 718
T = Other materials		
T1	1.4505	CrNiMoCuNb steel
T2	3.7035	Pure titanium
T3	2.4856	Inconel® 625
T4	1.3917	Carpenter® 42
T5	1.4876	Incoloy® 800

▶ Preferred materials
1) Standard following EN 12756, Dec. 2000
2) Abbreviations acc. to ISO 1629, Nov. 2004

Color code

- Shaft
- Housing, installation chamber
- Elastomers
- Stationary seal parts
- Seat(s), stationary
- Rotary seal parts
- Seal face(s), rotating

Short legend for seal selection by media

Notes on the medium (2)
G = Mixture/group
N = Natural product
® = Trade mark
S = Collective term
TA = TA-Luft relevant
V = Impurities

Concentration (3)
– = "any"
< 10 = less than 10 weight %
~ 10 = approx. 10 %
F10 = Solids up to 10 %
L = Defined solution
< L = Unsaturated solution
> L = Supersaturated sol.
Sch = Melt
Sus = Suspension

Temperature (4)
< 100 = less than 100 °C
> F = > Solidifying temp.
> K = > Crystallization temperature
< Kp = < Boiling temperature
> Pp = > Pour point
TG = < Material temperature limit

Arrangement of shaft seal (5)
S = Single mechanical seal
D = Dual mechanical seal
Q = Quench

Auxiliary piping (6)
Arrangements see API 682/ISO 21049

Auxiliary measures (7)
D = Steam quench
(H), H = Heating (if necessary)
kD = Conical stuffing box
SS = Splash guard
SW = Replacement of buffer medium
QW = Replacement of quench medium
ThE = Thermal buffer

Mechanical seal type on product side (8)
1 = with elastomer O-Rings, rotating springs in contact with the product
2 = same as 1 but springs not in contact with the product
3 = same as 2 but stationary springs
4 = same as 2 but metal free on product side
5 = with elastomer bellows
6 = with metal bellows
X = special design

Material selection (9)
For designations acc. to EN 12756 see table of materials.

Health hazard warnings (10)
T = Toxic
T+ = Very Toxic
Xn = Harmful
R.. = Carcinogenic/mutagenic
Xi = Irritant
C = Corrosive
1 = Vapor pressure/gas
2 = Corrosion
3 = Exclusion of air
4 = Lubricating properties
5 = Icing
6 = Leakage
F = Highly flammable
F+ = Extremely flammable
O = Oxidizing
E = Explosive
N = Dangerous
U = Insufficient information

TLV (11)
a fig. = TLV in ppm
mg = TLV in mg/m³
# = mg/m³ of base substance
***** = No TLV because it is dearly carcinogenic

Normal condition (12)
ga = Gaseous
fe = Solid
fl = Liquid
kr = Crystalline
pa = Viscous

Melting point (13)
K ... = Efflorescence temperature
S ... = Sublimation temperature
... % = Values for ... % aqueous solution

Boiling point (14)
A ... = Boiling point of the azeotrope
Z = Decomposition temperature
(...) = Reference pressure in mbar
... % = Values for ... % aqueous solution

Density (g/cm³) (15)
(+) = Heavier then air
(–) = Lighter than air
(...) = Reference temp. in °C
A ... = Density of the azeotrope at ... %
... % = Values for ... % aqueous solution

Argentina · Australia · Austria · Belarus · Belgium · Bulgaria · Brazil · Canada · Chile · China · Colombia · Cyprus · Czech Republic · Denmark · Ecuador · Egypt · Estonia Finland · France · Germany · Great Britain · Greece · Hungary · India · Indonesia · Iraq · Iran · Israel · Italy · Japan · Jordan · Kazakhstan · Korea · Kuwait · Latvia · Libya Lithuania · Malaysia · Mauritius · Mexico · Morocco · Myanmar · Netherlands · New Zealand · Nigeria · Norway · Oman · Pakistan · Paraguay · Peru · Philippines · Poland Qatar · Romania · Russia · Saudi Arabia · Singapore · Slovenia · Slovak Republic · South Africa · Spain · Sweden · Switzerland · Syria · Taiwan · Thailand · Trinidad and Tobago Tunisia · Turkey · Turkmenistan · Ukraine · United Arab Emirates · Uruguay · USA · Uzbekistan · Venezuela · Vietnam · **www.eagleburgmann.com/world**

EBPCE/E2/10.000/03.11/4.4(2).1 © EagleBurgmann Group Marketing, Germany

EagleBurgmann is one of the internationally leading companies for industrial sealing technology. Our products are used everywhere where safety and reliability are important: in the oil and gas industry, refining technology, the petrochemical, chemical and pharmaceutical industries, food processing, energy, water, mining, pulp & paper, aerospace and many other spheres. Every day, more than 5,500 employees contribute their ideas, solutions and commitment towards ensuring that customers all over the world can rely on our seals. Our modular TotalSealCare™ service underlines our strong customer orientation and offers tailor-made services for every application.

EagleBurgmann Germany GmbH & Co. KG
Aeussere Sauerlacher Strasse 6–10
D-82515 Wolfratshausen
Tel.: +49 (0)8171 23 0
Fax: +49 (0)8171 23 12 14
info@de.eagleburgmann.com
www.eagleburgmann.com

EagleBurgmann®
Rely on excellence